# SSC DETECTOR SOLENOID DESIGN NOTE #101

TITLE: Thin Solenoid Design Ideas

AUTHORS: R. Fast, B. Wands, T. Kondo, A. Yamamoto, J. Purcell

DATE: November 16-18, 1989

ABSTRACT: This design note consists of copies of the viewgraphs shown by the authors in their presentations at the Solenoid Detector Collaboration Meeting at Argonne National Laboratory, November 16-18, 1989.

PRESENTATION BY RON FAST (Fermilab)

# FERMILAB SOLENOID DESIGN TEAM

Bob Kephart Ron Fast John Grimson

Jim Krebs Bob Wands

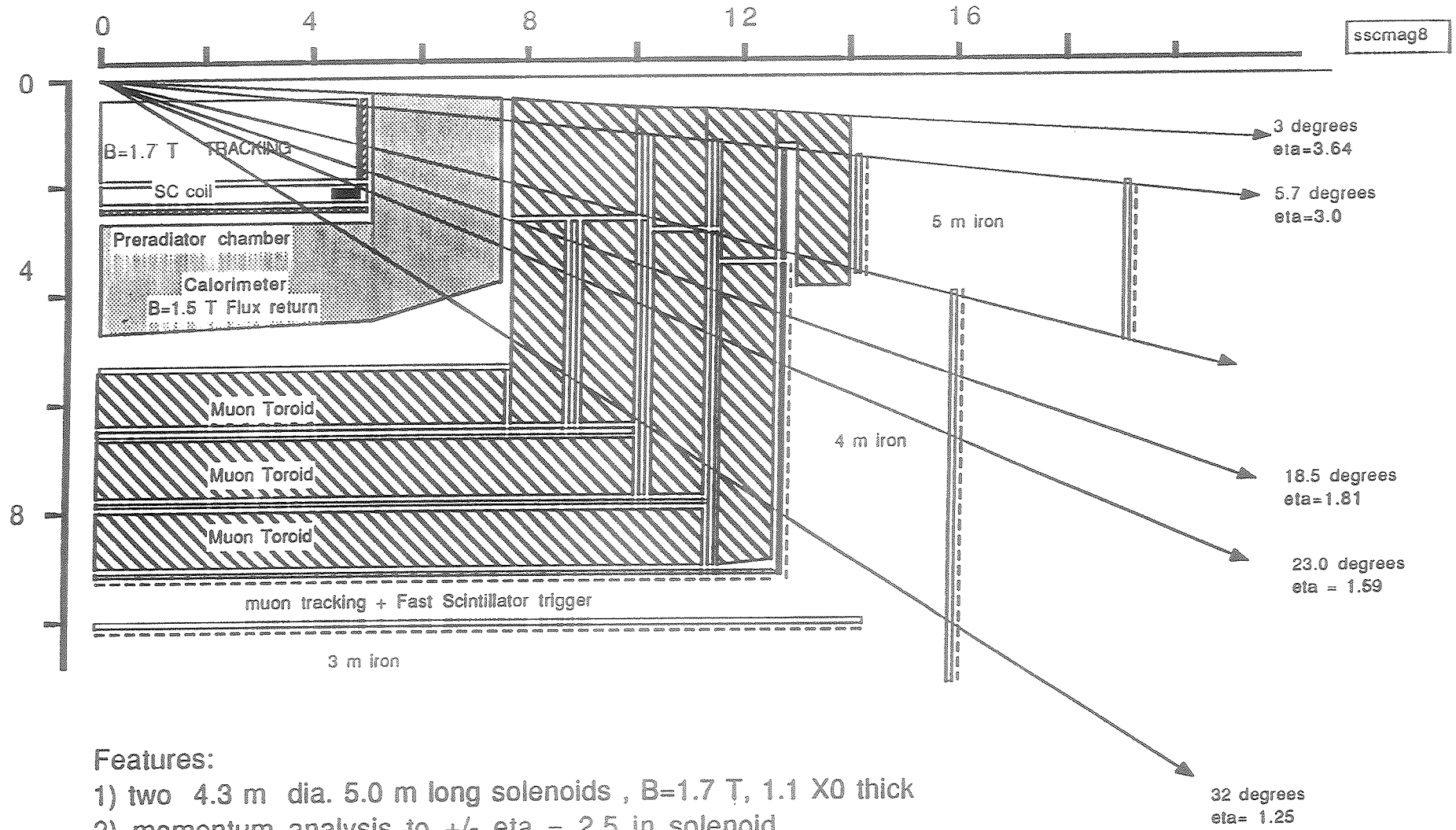


Features:

1) two 4.3 m dia. 5.0 m long solenoids , B=1.7 T, 1.1 X0 thick
2) momentum analysis to +/- eta = 2.5 in solenoid
3) BL**2.5 factor of 2.75 that of CDF
4) Magnetized Iron toroid muon system (31K tons)
5) muons over +/- eta =3.0, e's over +/- eta=2.5

#2

SSCMAG11

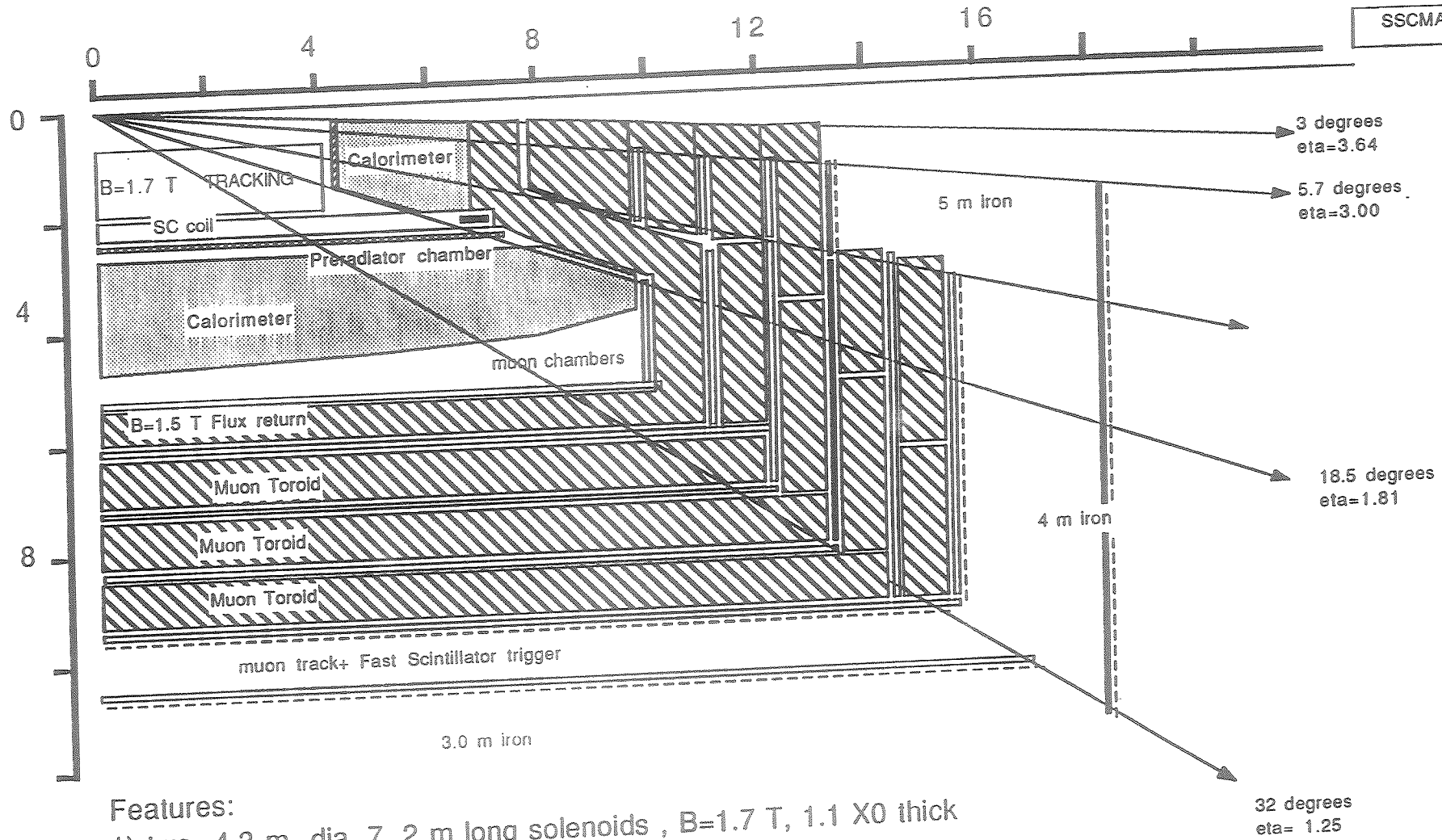


Features:

1) two 4.3 m dia. 7 .2 m long solenoids , B=1.7 T, 1.1 X0 thick
2) momentum analysis to +/- eta = 2.5 in solenoid
3) BL**2.5 factor of 2.75 that of CDF
4) Magnetized Iron yoke + muon toroids (44 k tons)
5) muons over +/- eta =3.0, e's over +/- eta=2.5

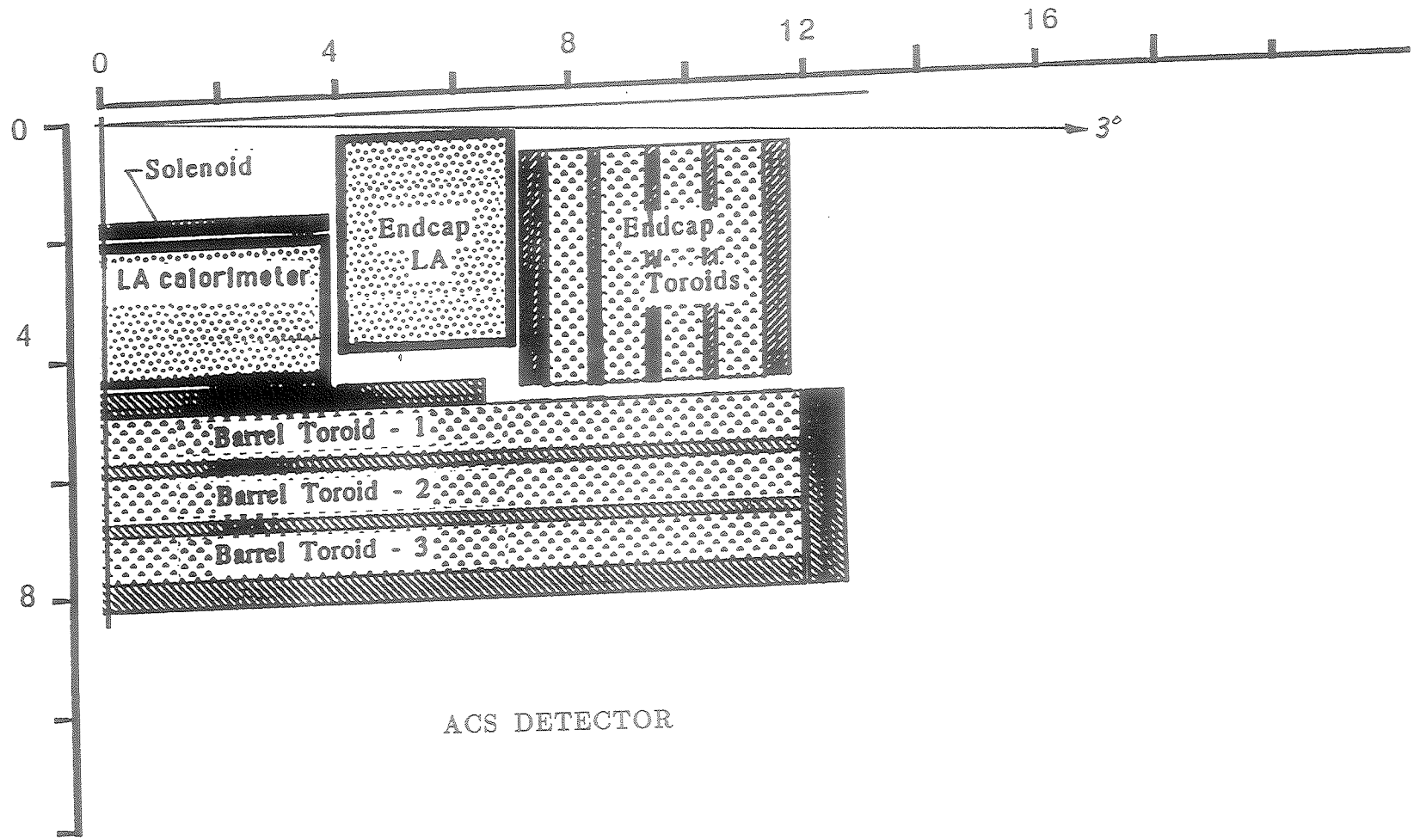


ACS DETECTOR

Features:

1) One, 3.6 m diameter x 7.3 m long air core solenoid
2) B = 1.7 T, 0.9 X0 thick
3) Magnetized iron toroid muon system (approx. 30 k tons)

# CDF SOLENOID--THICKNESS OF COMPONENTS

| Item-Material | Thickness (mm) | Rad. Length (X0) |
|---|---|---|
| Inner vac shell-Al | 6.4 | 0.071 |
| Inner shield-Al | 2.0 | 0.022 |
| Conductor-Al,Cu,NbTi | 20.0 | **0.312** |
| Insulation-GFRP | 2.0 | 0.011 |
| Outer Support Cyl-Al | 16.0 | **0.179** |
| Outer shield-Al | 2.0 | 0.022 |
| Outer vac shell-Al | 19.0 | **0.214** |
| | Total | 0.831 |

## DESIGN STANDARD FOR OUTER VACUUM SHELL

COMPRESSED GAS ASSOCIATION SPECIFICATION CGA-341

INSULATED CARGO TANK FOR CRYOGENIC LIQUIDS

3. General Requirements. . .

3.6 Outer Shell. . .

3.6.2 . . . must be designed for a minimum collapsing pressure of 30 psi (206.8 kPa)

3.6.2.1 Cylindrical shell determined by:

$$P_c = 2.6E(t/D)^{2.5}/[(L/D) - 0.45(t/D)^{0.5}]$$

where: E = modulus (psi), t = thickness (in), L = length (in), D = diameter (in)

# Cylindrical Vacuum Shell Thickness

based on 30psi collapse and L=7.2m

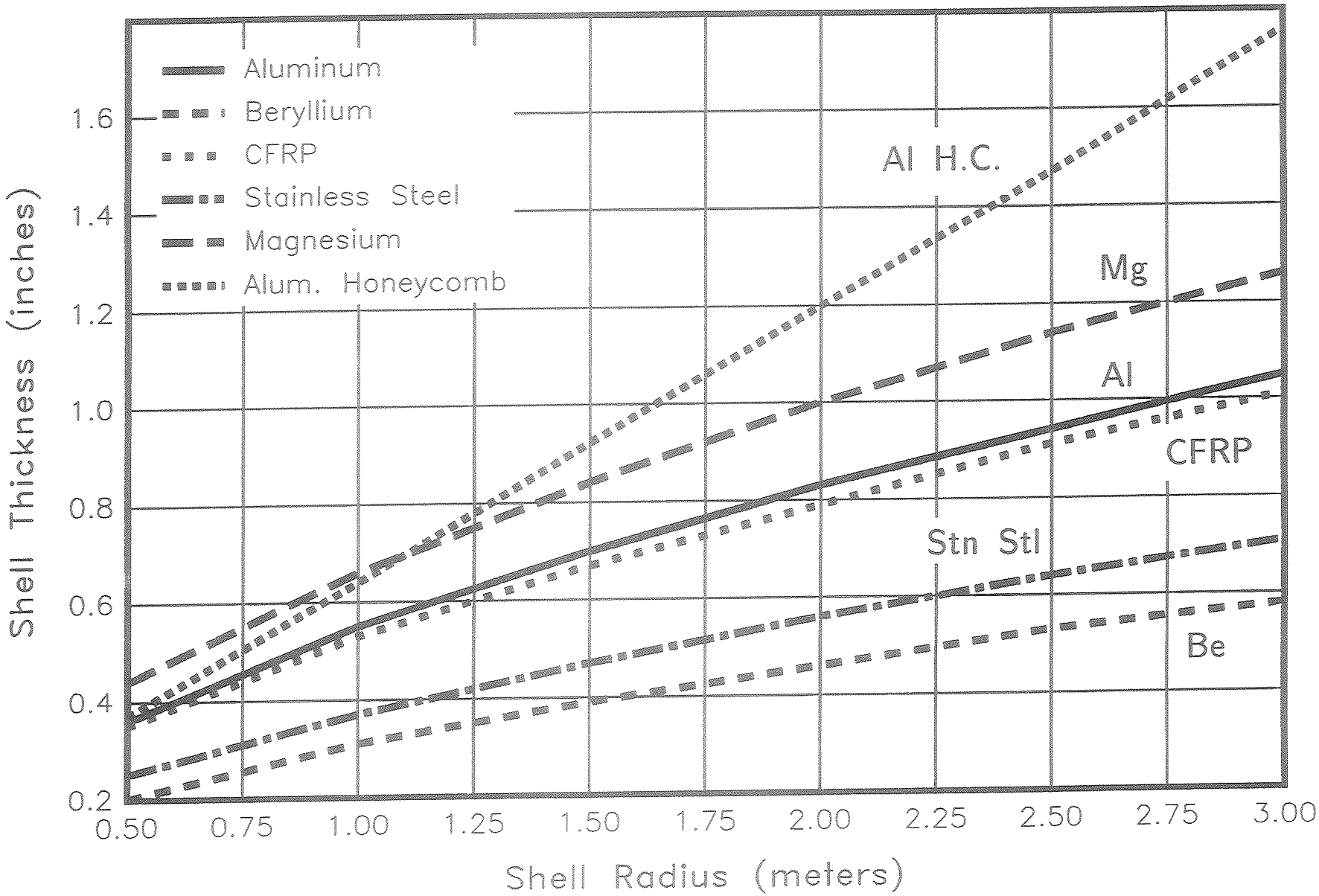

# Cylindrical Vacuum Shell Thickness

based on 30psi collapse and L=7.2m

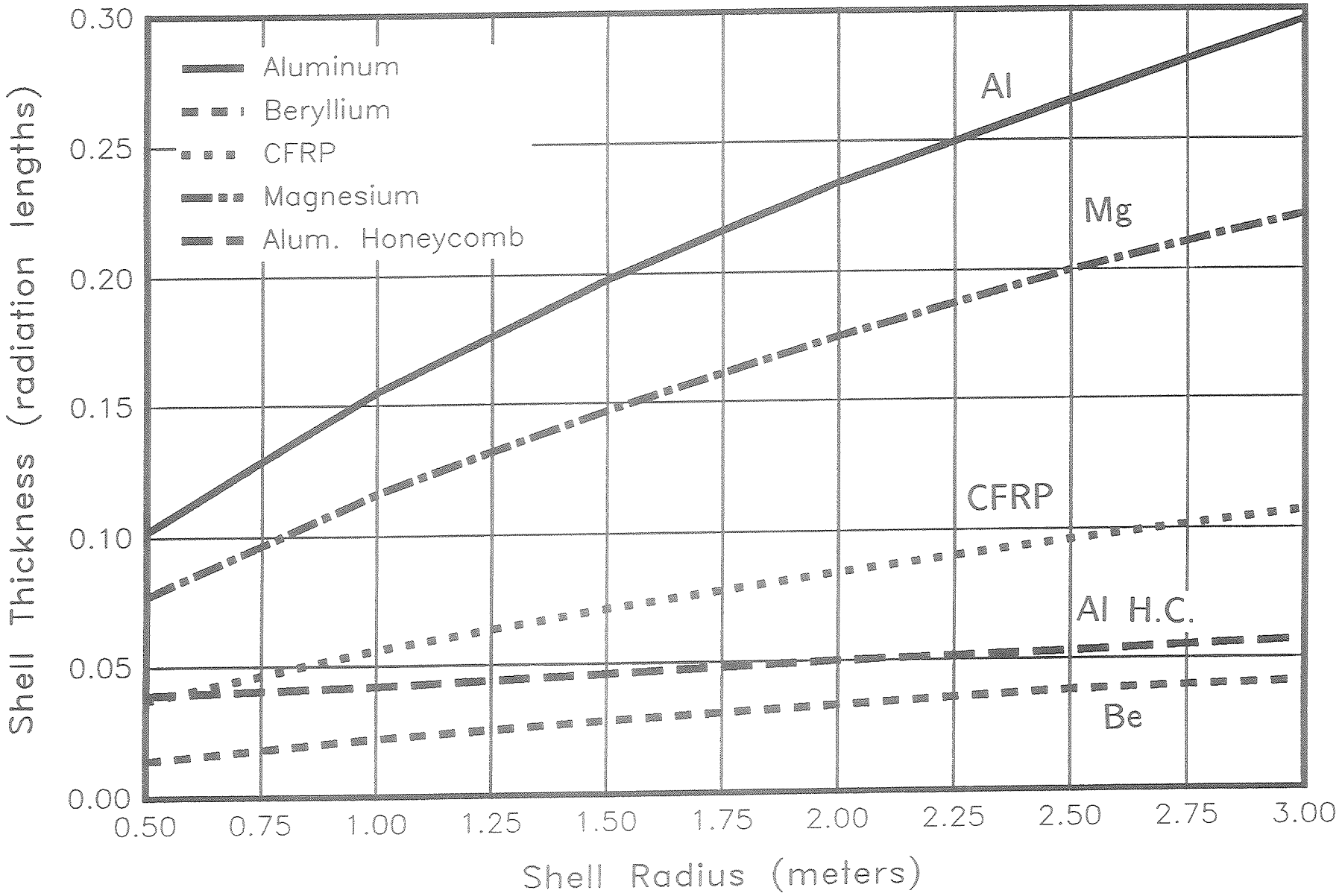

# Maximum Axial Conductor Force at 1.7 T

for three solenoid geometries

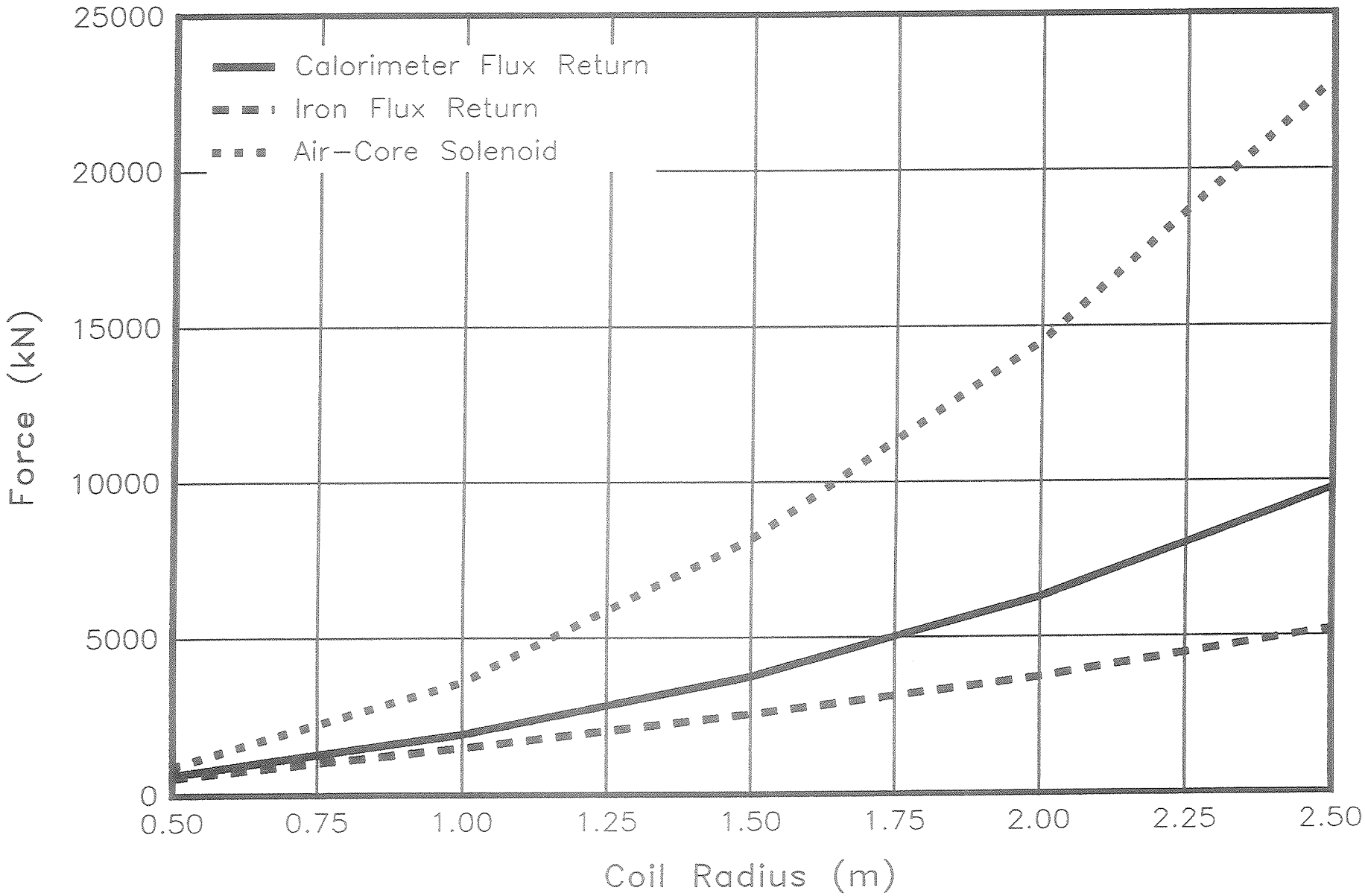

# BDL for 1.7T, 2-m Radius

comparison of three solenoid designs

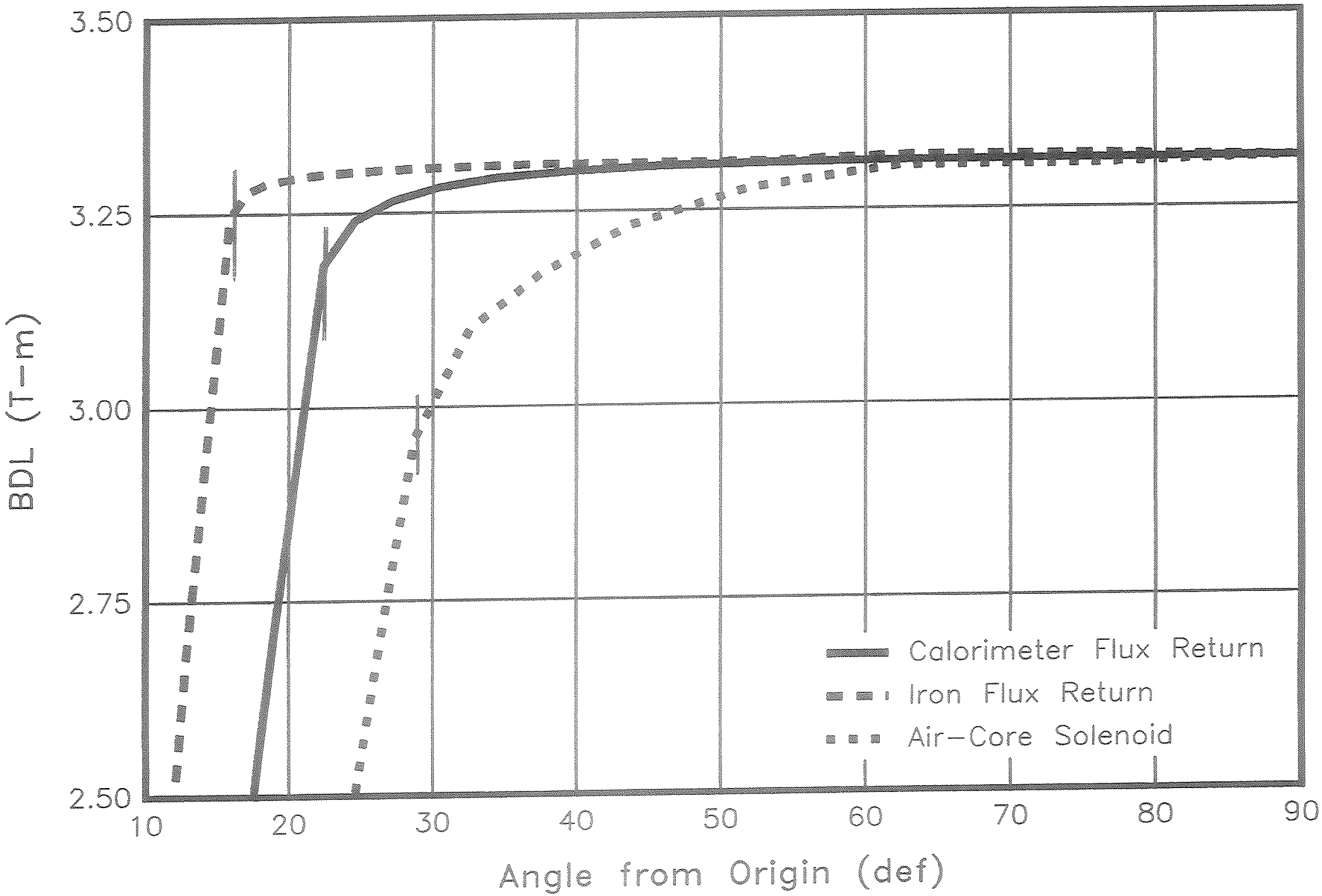

# Iron Flux Return Solenoid Stabilizer Thickness

for adiabatic temperature rise and axial stress requirements
for RRR = 750 and 0.1% strain

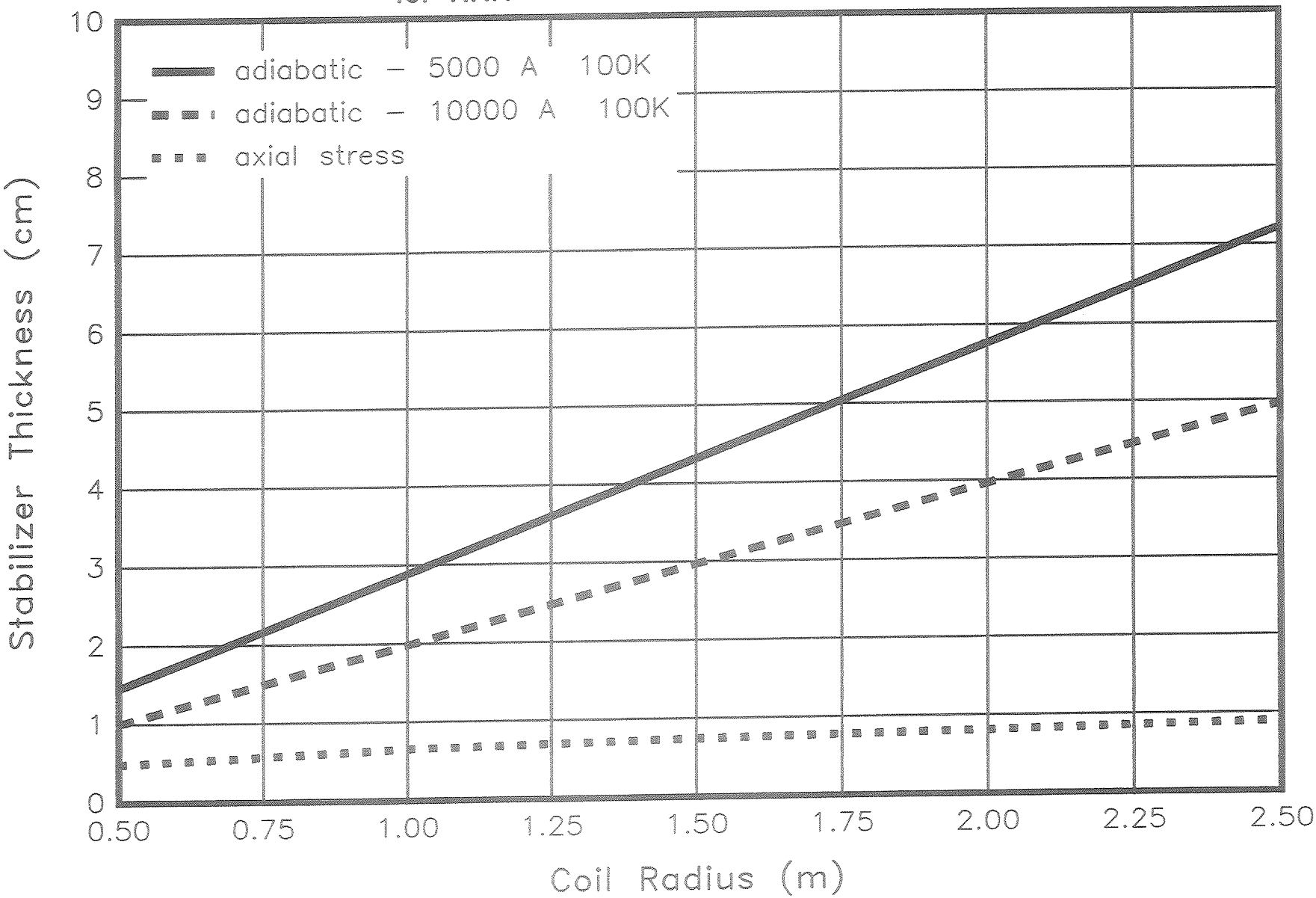

# Calorimeter Flux Return Solenoid Stabilizer Thickness

for adiabatic temperature rise and axial stress requirements

for RRR = 750 and 0.1% strain

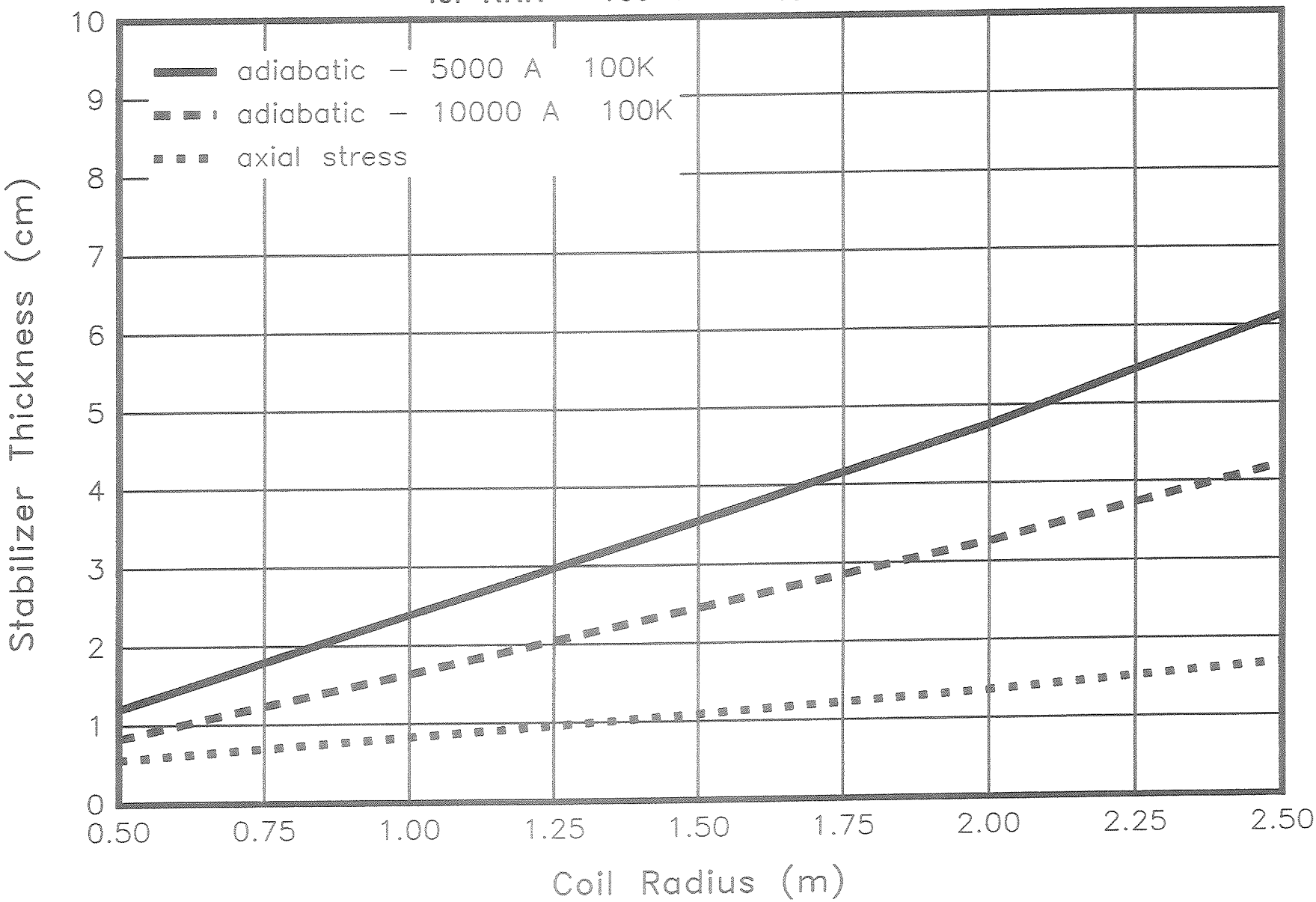

# Air Core Solenoid Stabilizer Thickness

for adiabatic temperature rise and axial stress requirements
for RRR = 750 and 0.1% strain

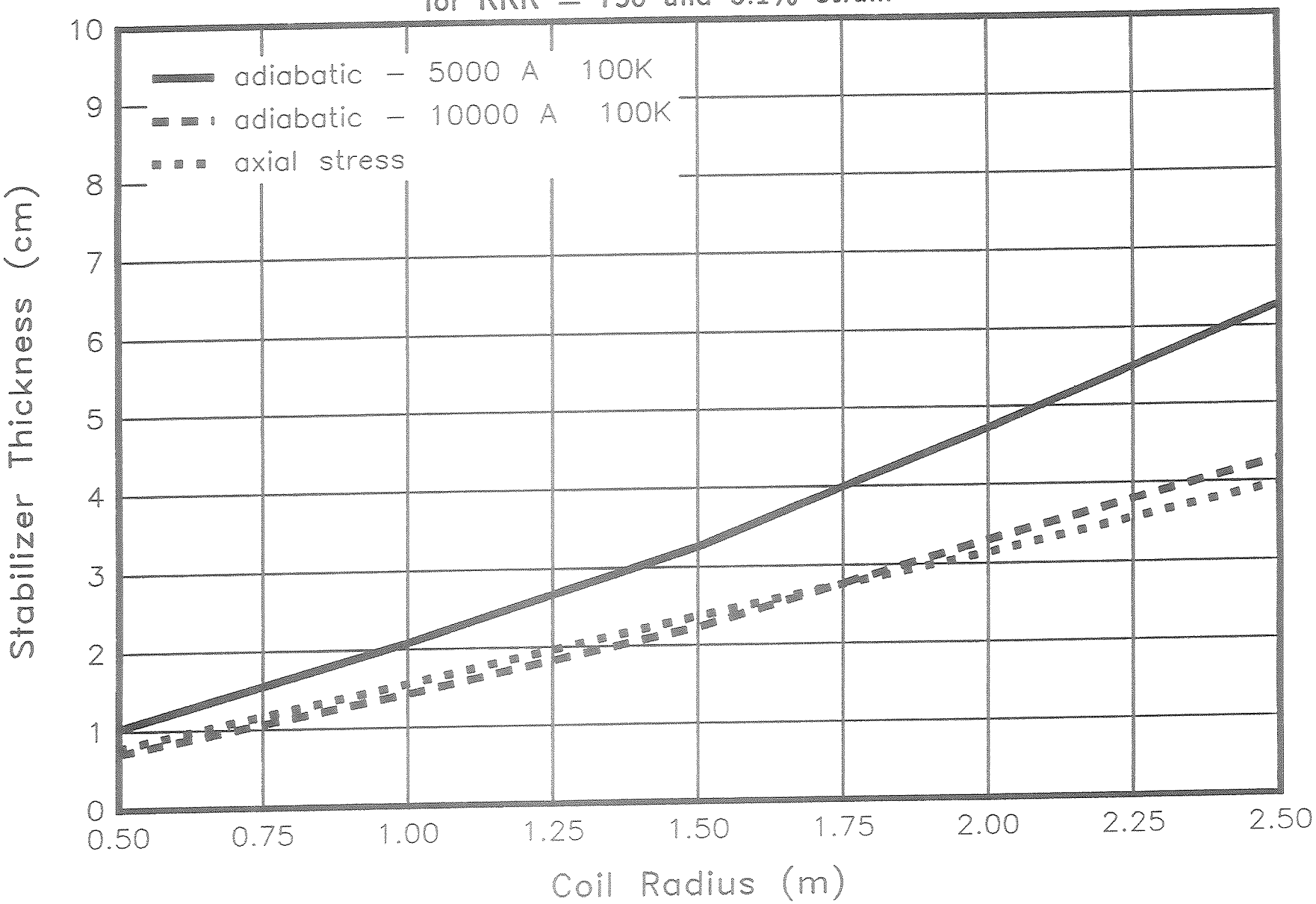

# Stabilizer Thickness for Adiabatic Heating Requirements

Comparison of three geometries for 5000 A, 1.7T and 100K
for RRR = 750 and 0.1% strain

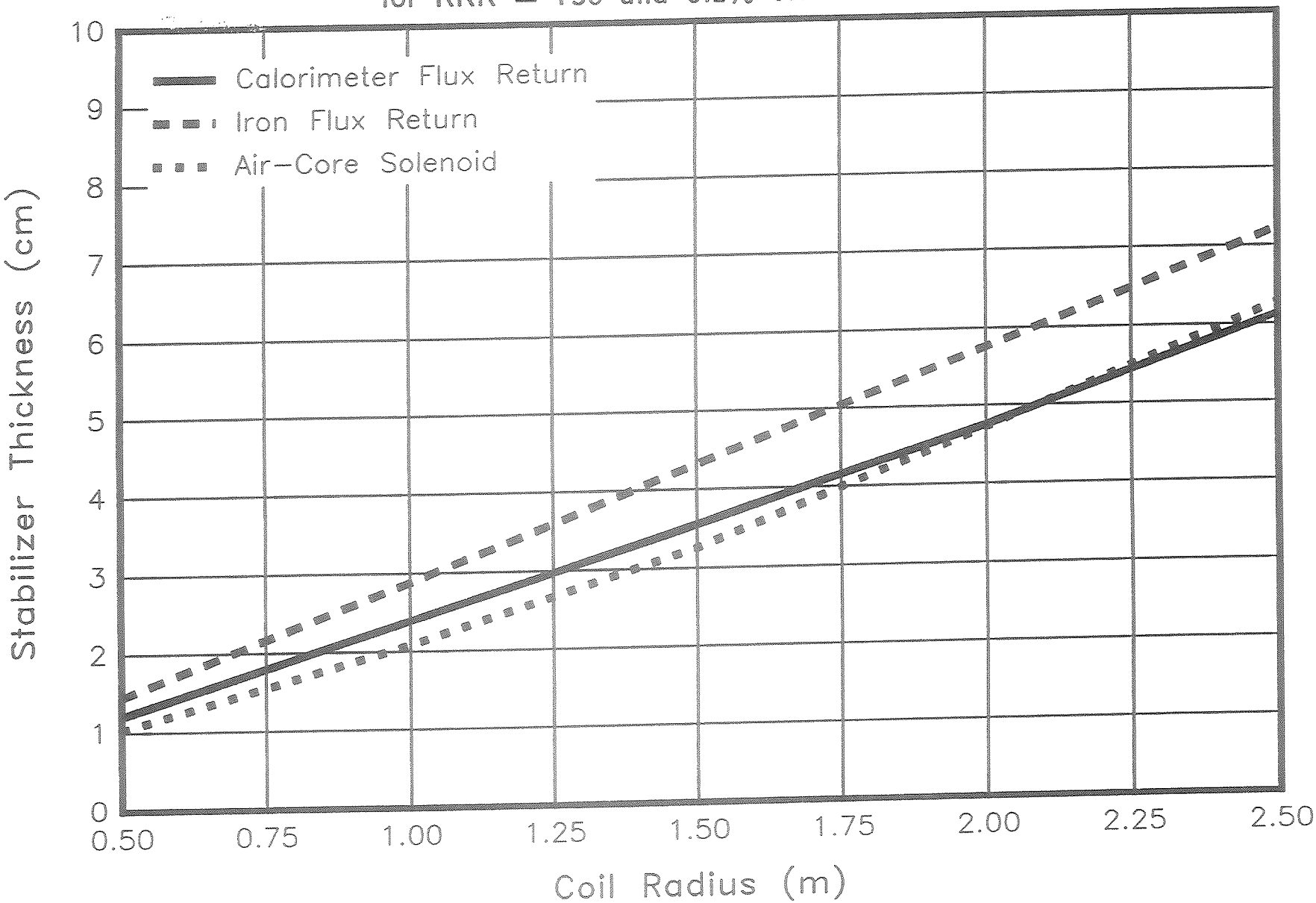

PRESENTATION BY BOB WANDS (Fermilab)

B. Wands
11/17/89

# EVALUATION OF SOLENOIDAL MAGNETS FOR SSC

## PURPOSE

TO EVALUATE THREE SOLENOID GEOMETRIES IN TERMS OF STRUCTURAL AND QUENCH REQUIREMENTS OF THE CONDUCTOR STABILIZER AND SUPPORT CYLINDER OVER A WIDE RANGE OF COIL RADII

## METHOD

ANSYS FINITE ELEMENT PROGRAM WAS USED WITH REAL B-H CURVES FOR TYPICAL 1020 MAGNET STEEL. AXIAL DIMENSIONS WERE FIXED, AND RADIAL DIMENSIONS SCALED FROM 0.5 M COIL RADIUS TO 2.5 M COIL RADIUS

CURRENT DENSITIES IN THE THREE GEOMETRIES WERE ADJUSTED TO GIVE THE SAME BDL INTEGRAL AT 90 DEG. FOR A GIVEN RADIUS

RESULTS OF PROGRAM WERE AXIAL AND HOOP FORCES ON COIL AND SUPPORT CYLINDER, INDUCTANCE, AND MAGNETIC FIELD. AVAILABLE BUT NOT PRESENTED HERE WERE FORCES ON IRON.

RADIAL STABILIZER THICKNESS WAS BASED ON:

A. AXIAL COIL FORCE
B. ADIABATIC HEATING DURING QUENCH (ASSUMING PEAK 500 V)

SUPPORT CYLINDER THICKNESS WAS BASED ON:

A. RADIAL STABILIZER THICKNESS
B. COIL HOOP FORCE

# ALLOWABLE STRESSES

## STABILIZER

HIGH-PURITY ALUMINUM, RRR=750

MAXIMUM STRESS (COLD) AT 0.1% STRAIN

3670 N/CM**2
(3.7 KGF/MM**2)
(5300 psi)

MAXIMUM STRESS (WARM), 75% OF 0.2% YIELD STRESS

2070 N/CM**2
(2.1 KGF/MM**2)
(3000 PSI)

## SUPPORT CYLINDER

STRUCTURAL ALUMINUM (UNSPECIFIED)

MAXIMUM STRESS (COLD) AT 0.1% STRAIN

9200 N/CM**2
(9.4KGF/MM**2)
(13000 PSI)

NOTE:

VALUES WERE OBTAINED FROM STRESS-STRAIN CURVE FOR 2-CM R&D CONDUCTOR IN CDF DESIGN REPORT BASED ON ASSUMPTION THAT STABILIZER AND SUPPORT CYLINDER HOOP STRAINS MUST BE THE SAME. NUMBERS ARE AGGRESSIVE - 0.1% TOTAL STRAIN MAY BE INADMISSABLE DUE TO CHANGE IN RRR FROM CYCLIC STRAIN EFFECTS.

# DESCRIPTION OF THREE GEOMETRIES

## CALORIMETER FLUX RETURN SOLENOID

LENGTH = 10 M
FLUX RETURN IS THROUGH THE STEEL PLATES OF A LEAD-STEEL CALORIMETER

## IRON FLUX RETURN SOLENOID

LENGTH = 14 M
FLUX RETURN IS THROUGH IRON ONLY

## AIR-CORE SOLENOID

LENGTH = 7.3 M
IRON FAR REMOVED FROM SOLENOID

# APPROXIMATION OF BH CURVE FOR CALORIMETER FLUX RETURN SOLENOID

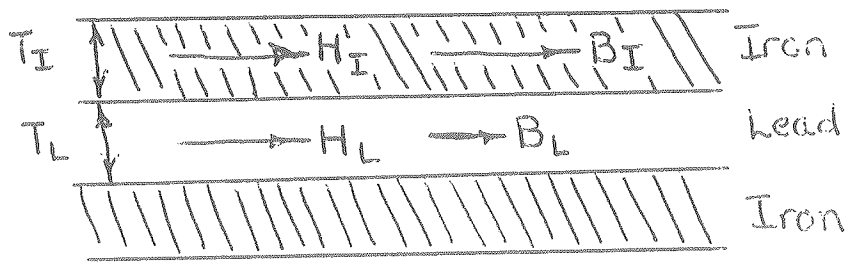


FOR FLUX PARALLEL TO PLATES: H IN STEEL = H IN LEAD

TO PRODUCE CORRECT B FIELD:

$$B = B_{IRON}(T_I/(T_I+T_L)) + MU_O{}^*H^*(T_L/(T_I+T_L))$$

# STABILIZER AND SUPPORT CYLINDER THICKNESS

## STABILIZER AXIAL THICKNESS

BASED ON CURRENT DENSITY, COIL AREA ASSUMED IN ANSYS, COIL LENGTH AND CURRENT

$$t_a = \frac{\ell I}{(CD)A}$$

## STABILIZER RADIAL THICKNESS

BASED ON ADIABATIC HEATING DURING A QUENCH (ASSUMING 500 V PEAK)

$$J_o^2\left(\frac{\ell}{2r}\right) = \int_{4.2}^{t_{max}} \frac{\gamma C_p}{\rho}\, dT$$

$\gamma$ = density
$C_p$ = specific heat
$\rho$ = resistivity
$J_o$ = current density
$\ell$ = inductance
$r$ = dump resistance

BASED ON AXIAL FORCE REQUIREMENTS

$$\frac{F_A}{2\pi r t_r} = \sigma_{max}$$

## SUPPORT CYLINDER RADIAL THICKNESS

BASED ON HOOP FORCE REQUIREMENTS

$$\sigma_{HSC}\, t_{rsc} + \sigma_{HS}\, t_{rs} = F_H$$

$\sigma_{HSC}$ = max hoop stress in support cyl.

$\sigma_{HS}$ = max hoop stress in stabilizer

$F_H$ = hoop force/cm axial length

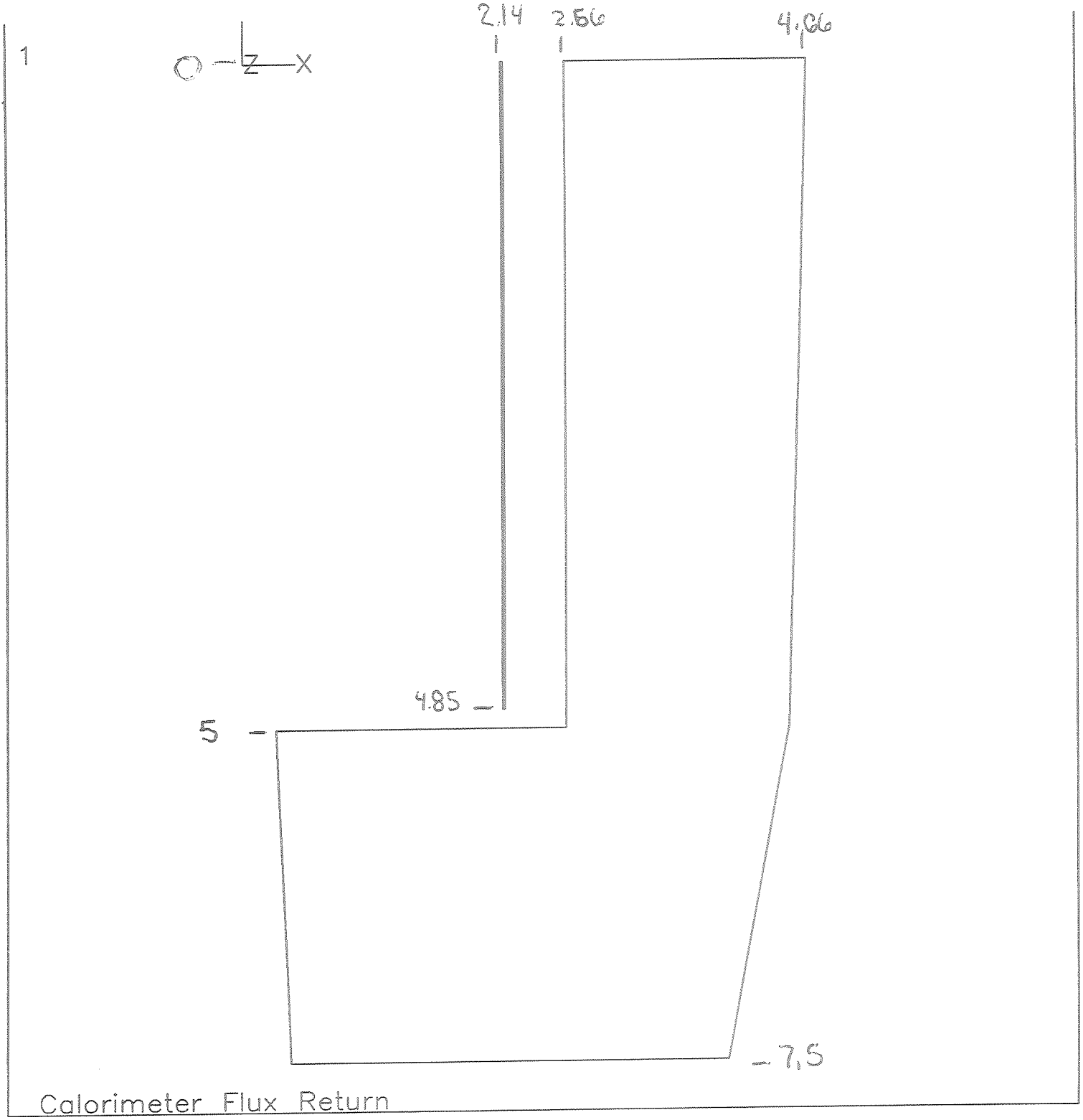


ANSYS 4.4
NOV 15 1989
16:59:26
PLOT NO. 1
POST1 ELEMENTS
TYPE NUM

ZV =1
DIST=4.125
XF =2.3
YF =-3.75
EDGE

Dimensions of
"Standard" Calorimeter
flux return solenoid

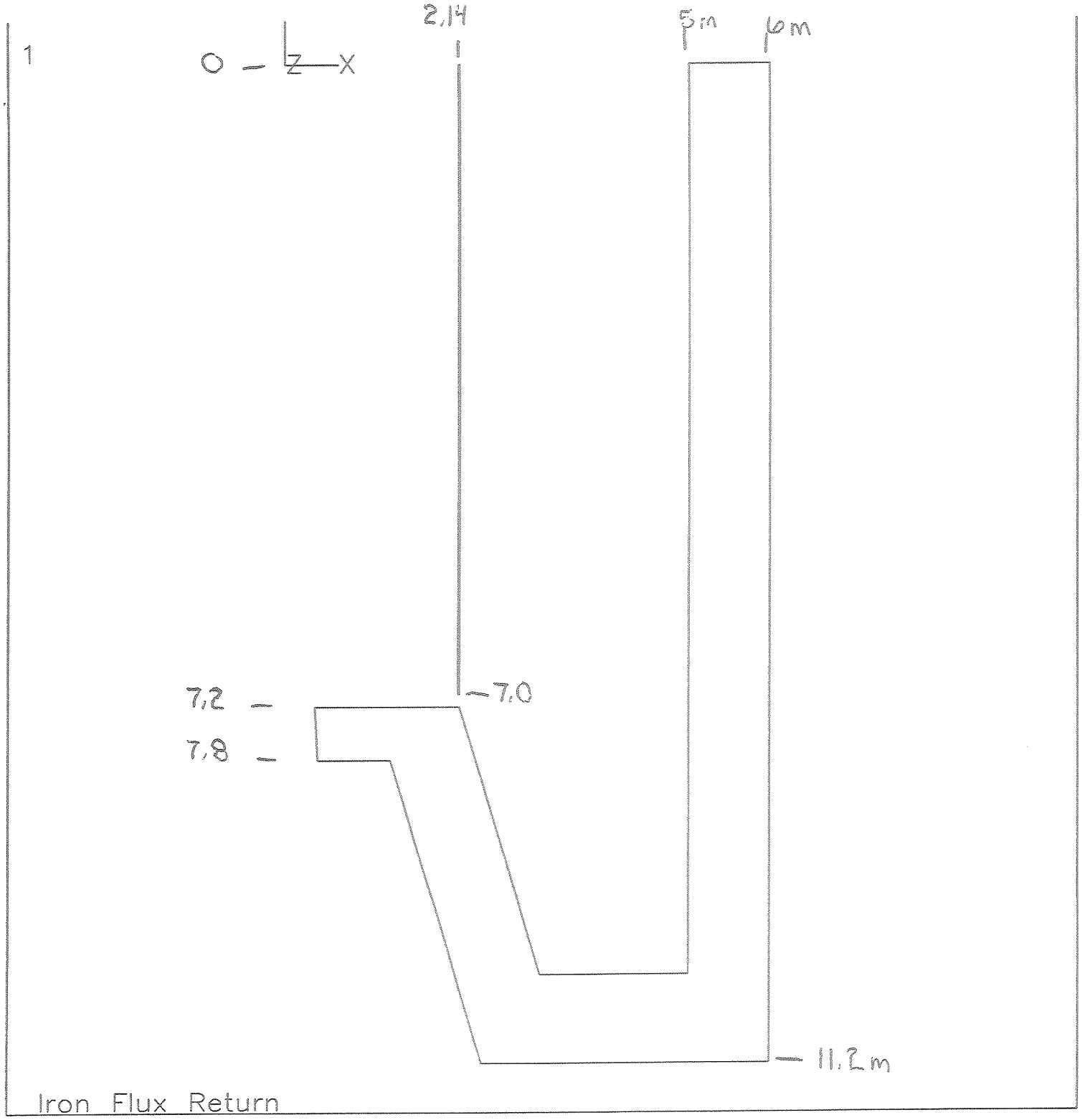


ANSYS 4.4
NOV 15 1989
17:00:30
PLOT NO. 1
POST1 ELEMENTS
TYPE NUM

ZV =1
DIST=6.16
XF =2.98
YF =-5.6
EDGE

Dimensions of
'Standard' Iron
Flux Return Model

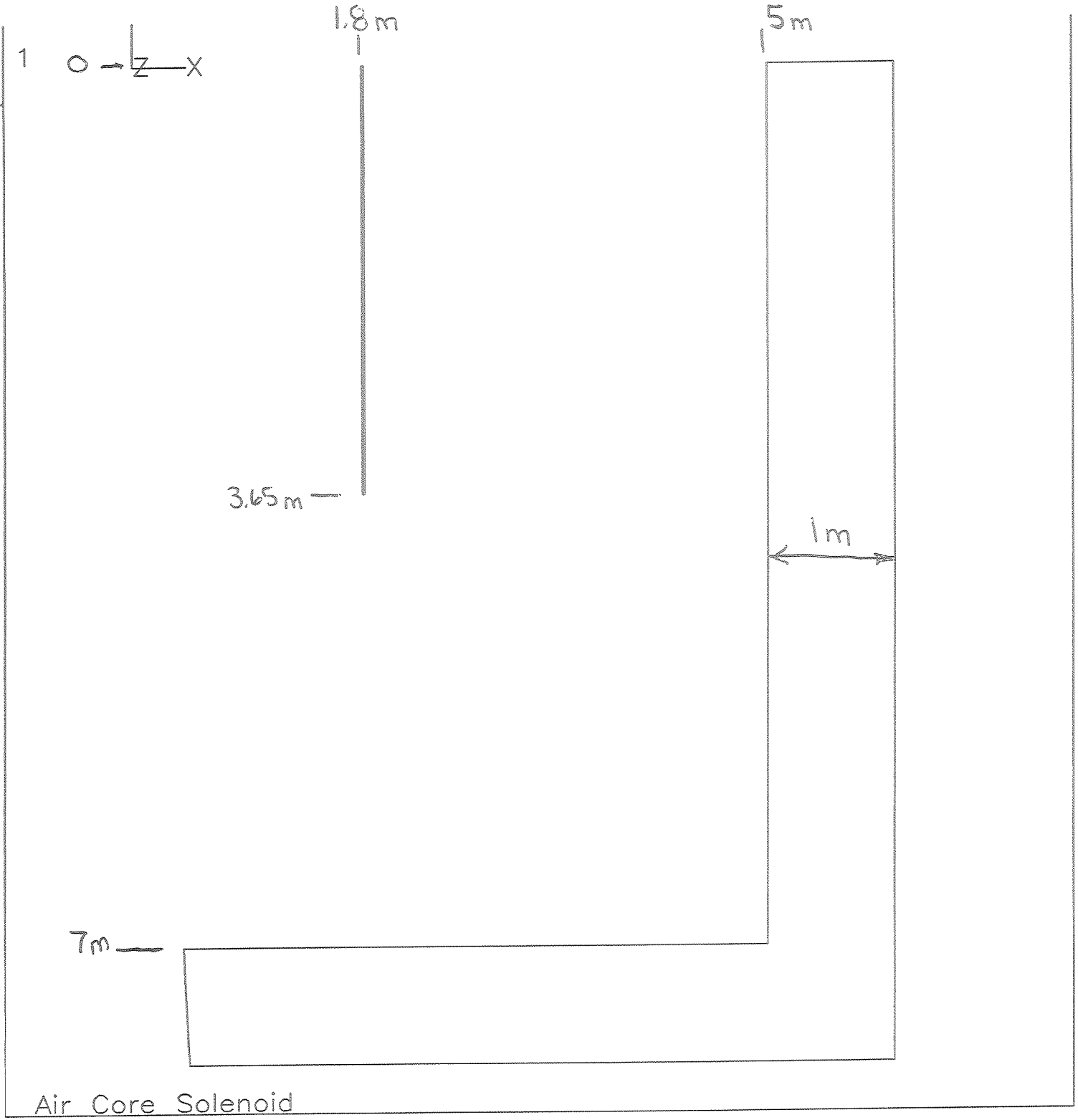


ANSYS 4.4
NOV 15 1989
17:01:22
PLOT NO. 1
POST1 ELEMENTS
TYPE NUM

ZV =1
DIST=4.675
XF =3.552
YF =-4.25
EDGE

Dimensions of "Standard" ACS Model

# Approximate BH Curves for CFR Solenoid

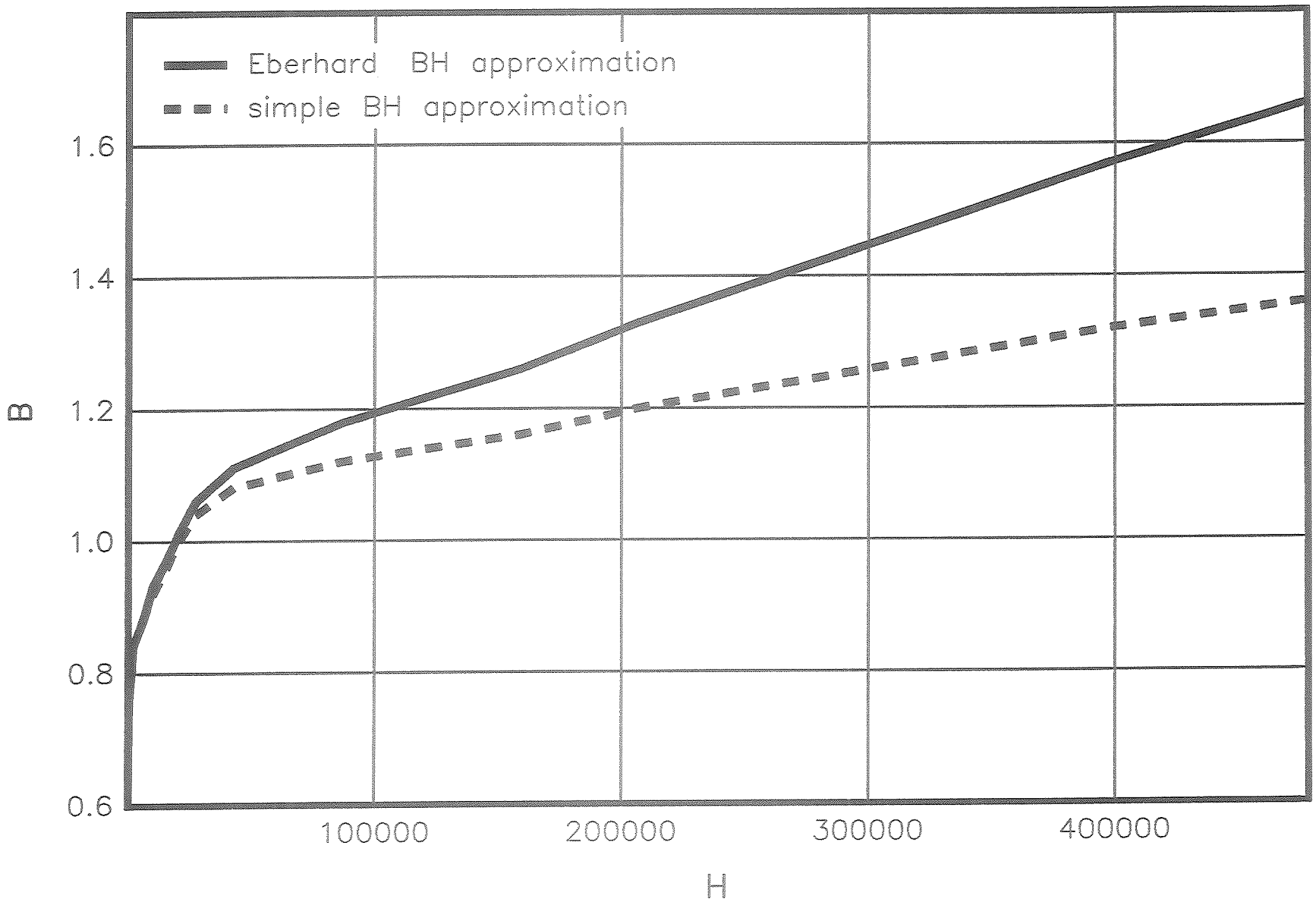

# Maximum Axial Conductor Force at 1.7 T

for three solenoid geometries

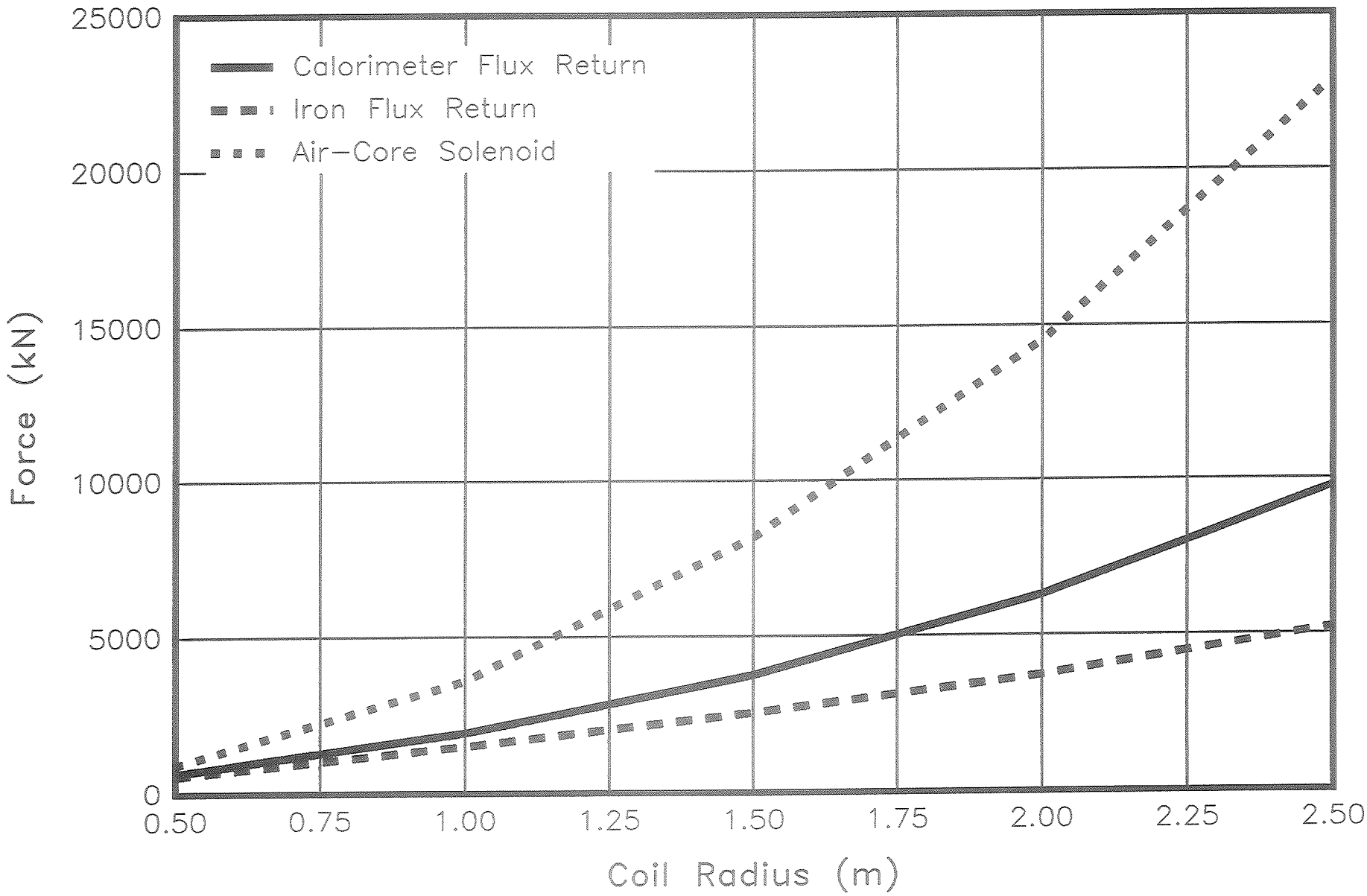

# Hoop Stress in Coils at 1.7T

for three solenoid geometries with R = 2 m

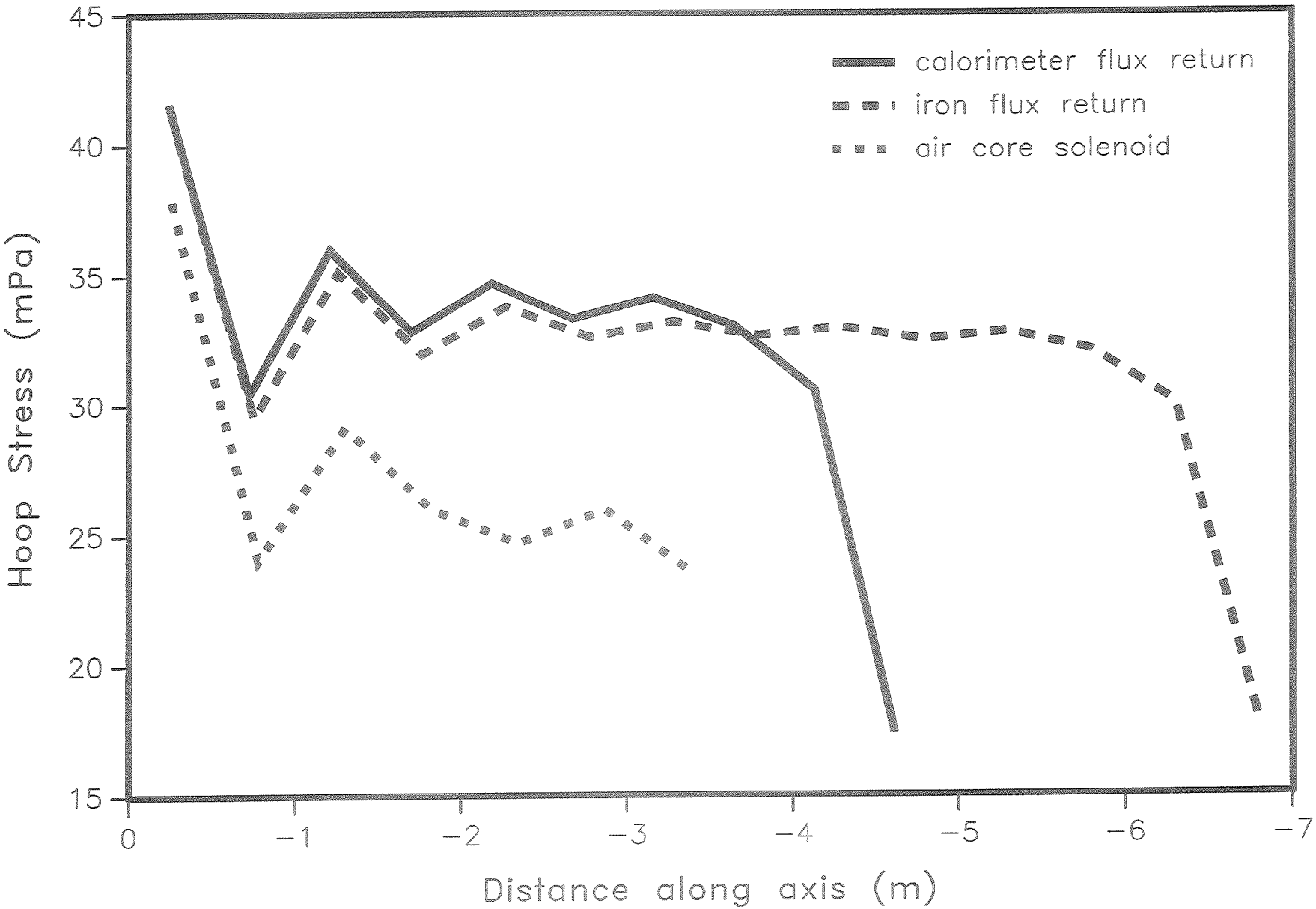

# Calorimeter Flux Return Solenoid Stabilizer Thickness

for adiabatic temperature rise and axial stress requirements

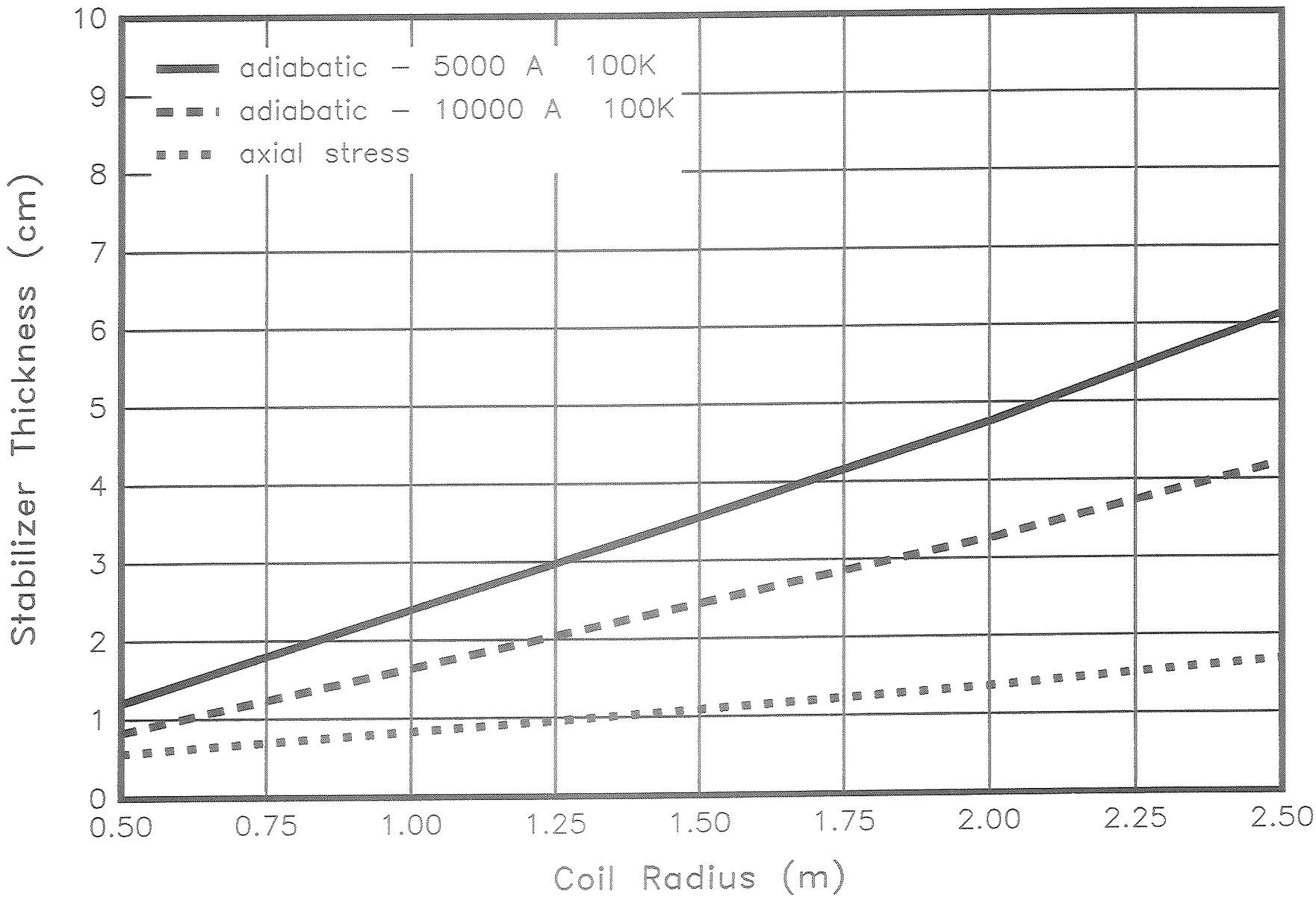

# Iron Flux Return Solenoid Stabilizer Thickness

for adiabatic temperature rise and axial stress requirements

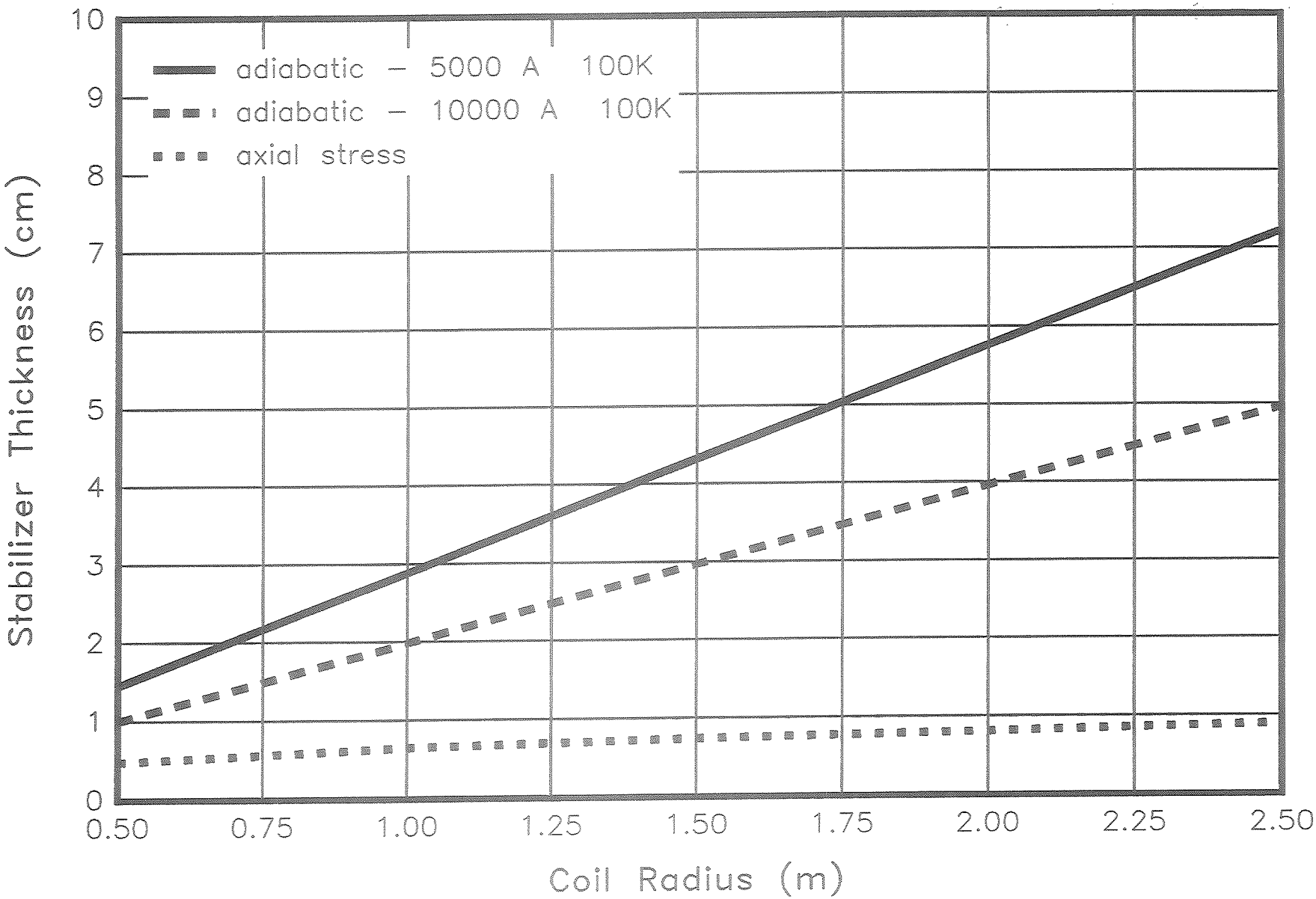

# Air Core Solenoid Stabilizer Thickness

for adiabatic temperature rise and axial stress requirements

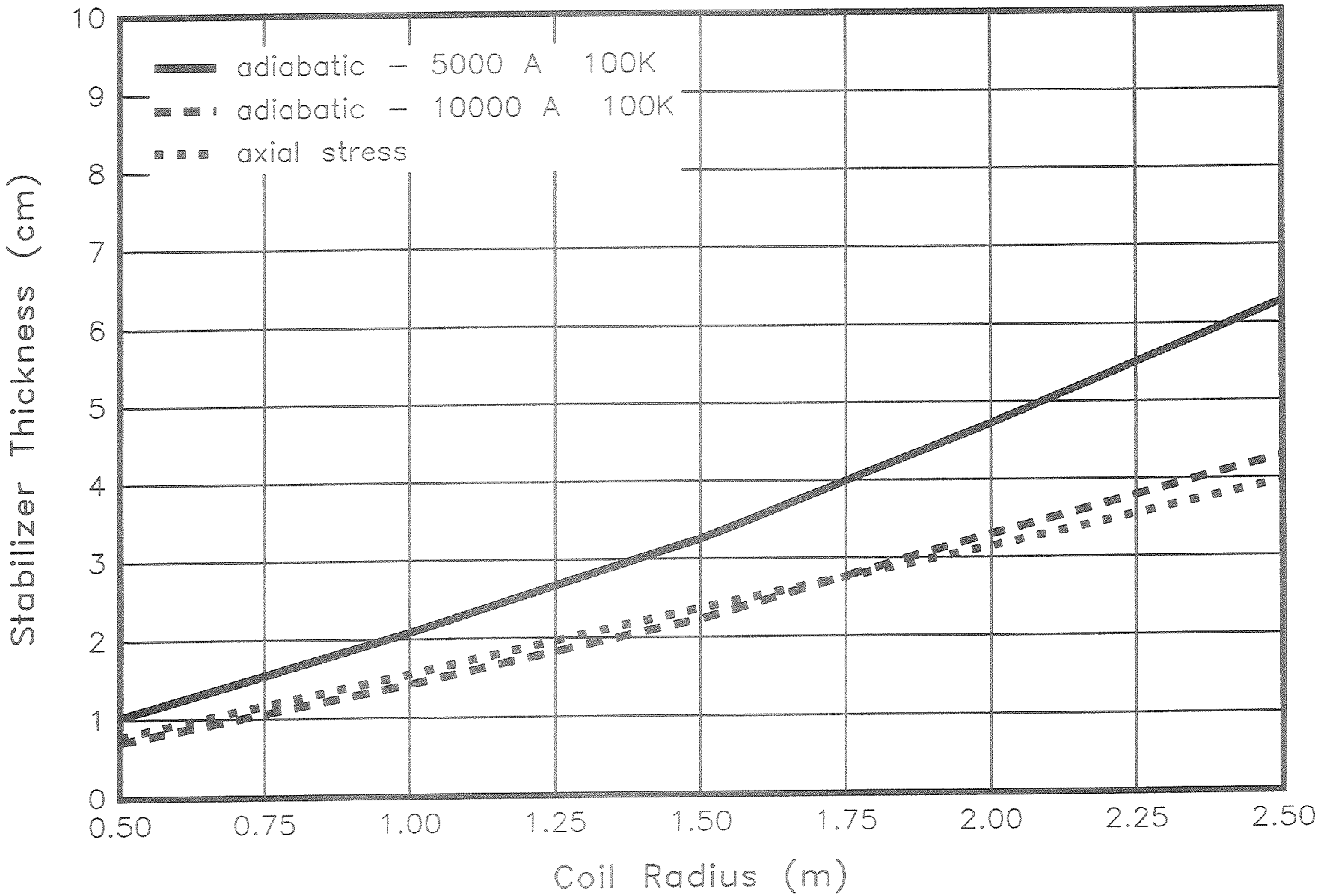

# Stabilizer Thickness for Adiabatic Heating Requirements

Comparison of three geometries for 5000 A, 1.7T and 100K

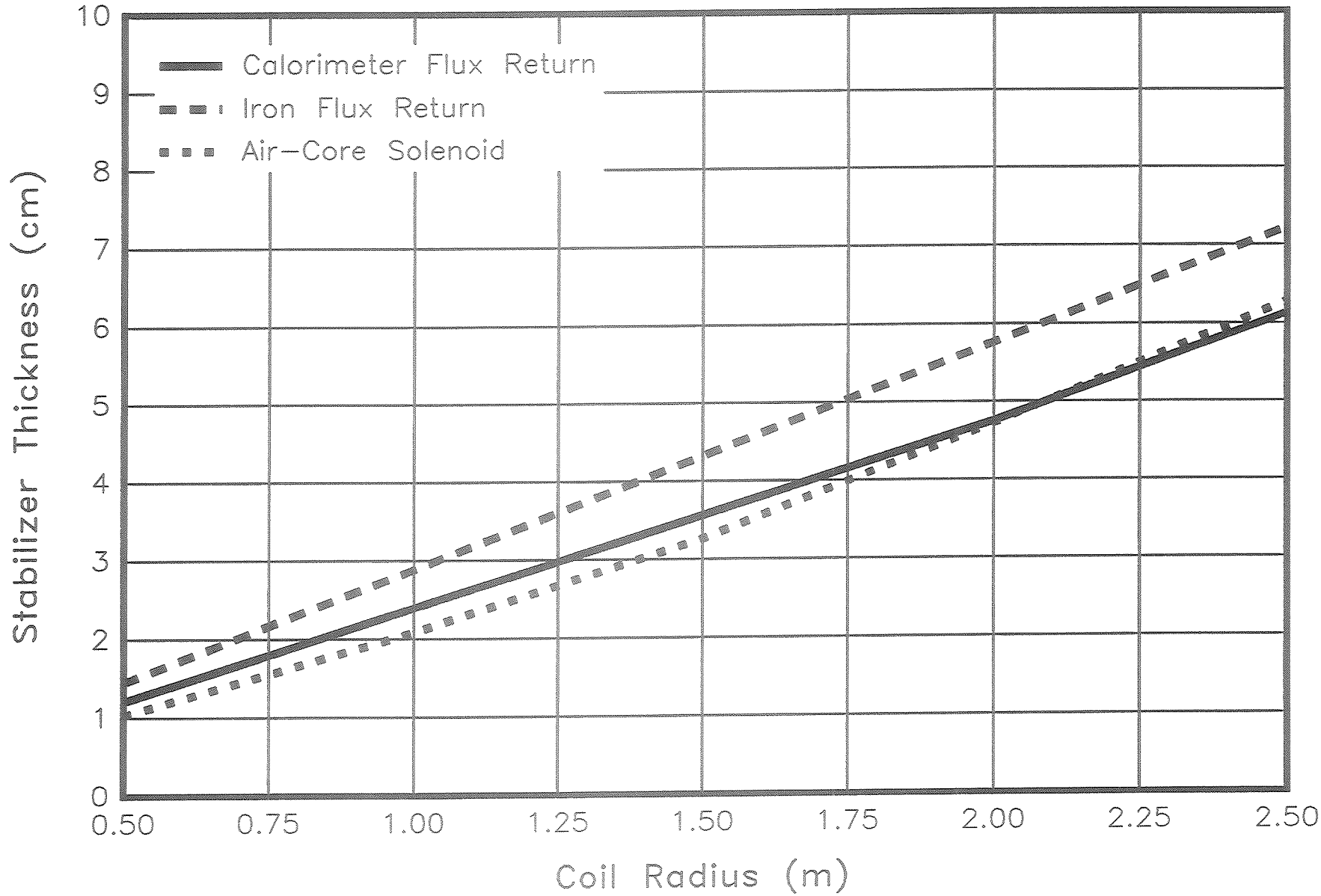

# Stabilizer plus Support Cylinder Thickness

at 1.7T, 5000 A, and 0.1% stabilizer hoop strain

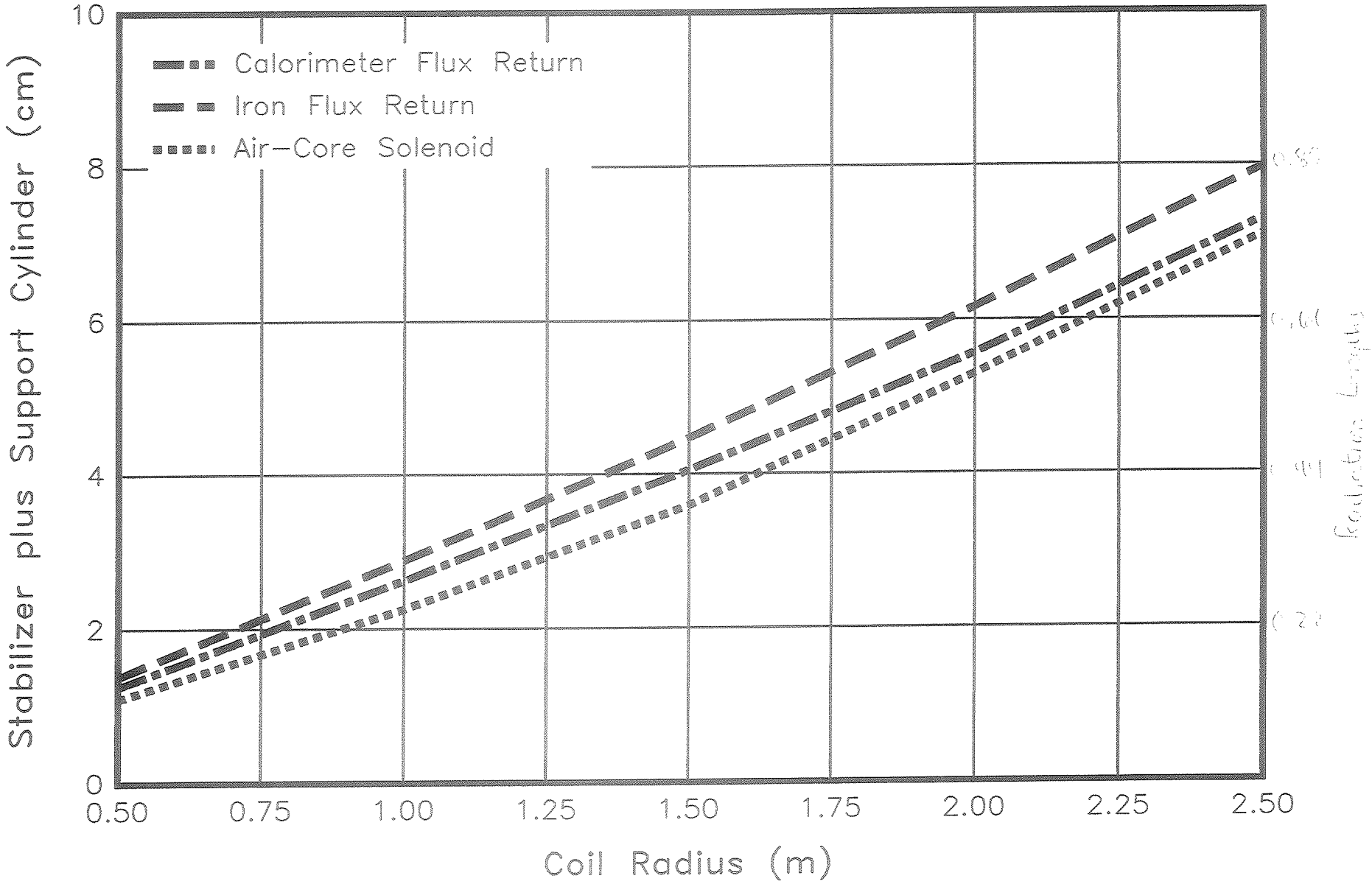

# Stabilizer plus Support Cylinder Thickness

at 1.7T, 10000 A, and 0.1% stabilizer hoop strain

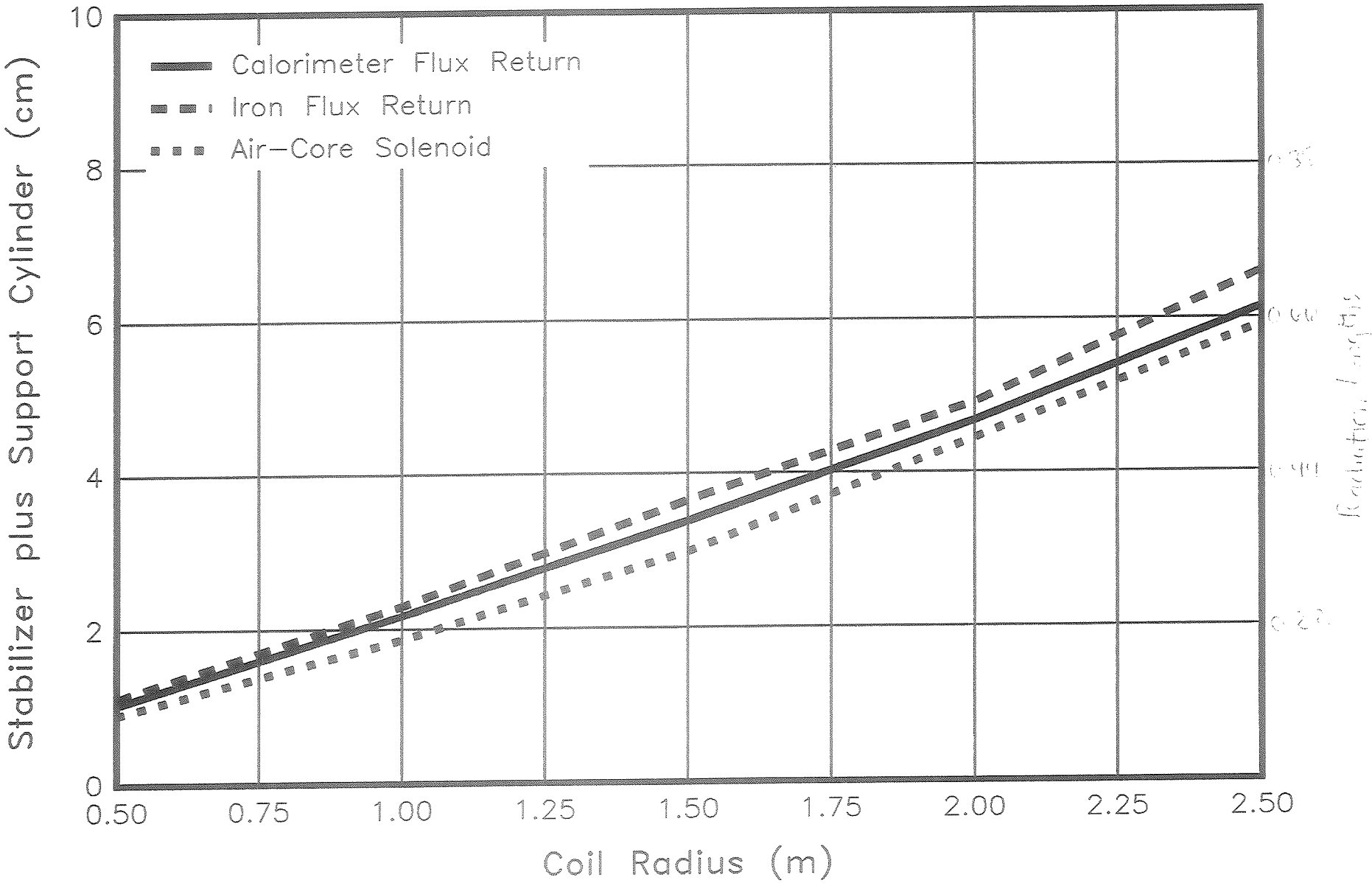

# BDL for 1.7T, 2-m Radius

comparison of three solenoid designs

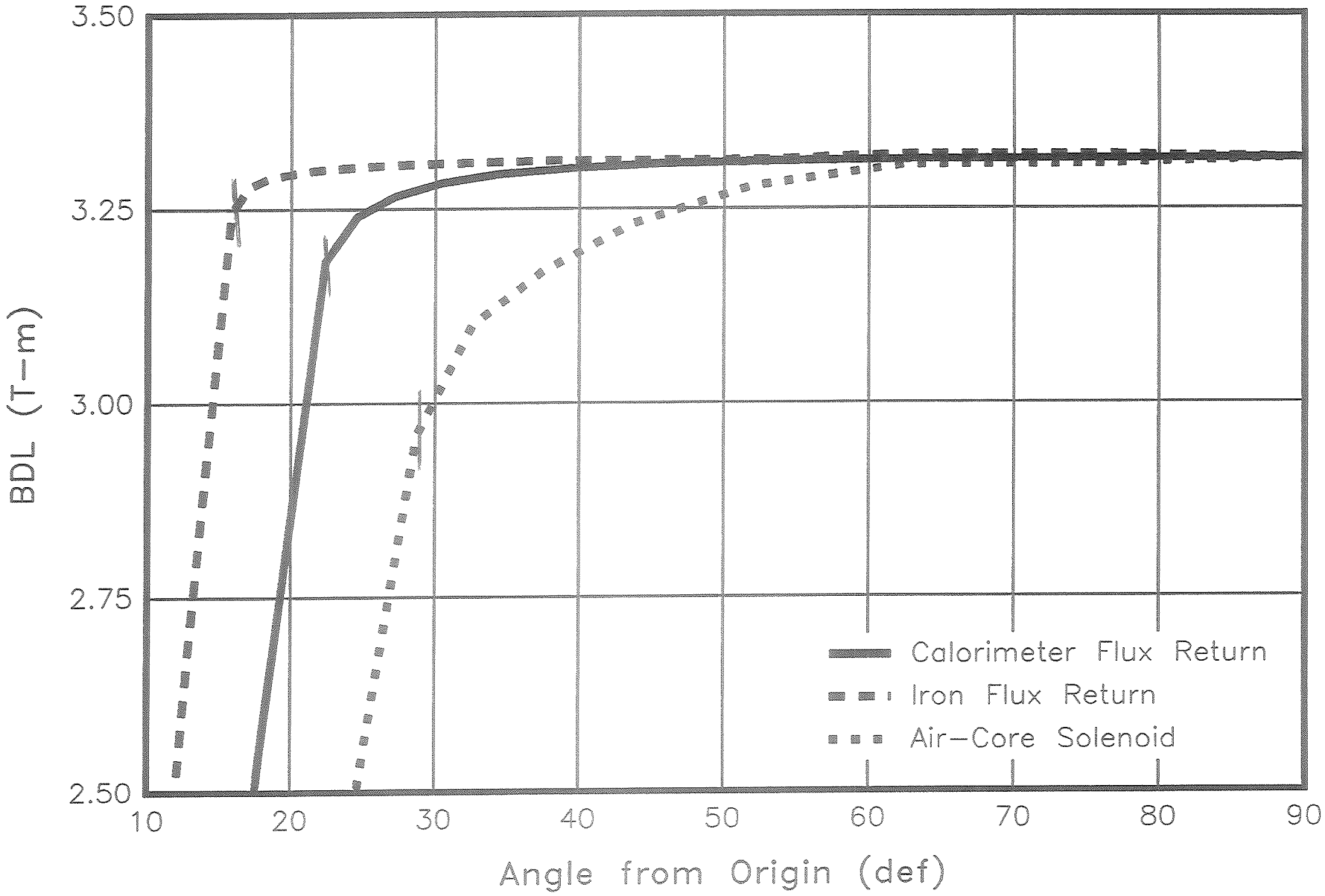

PRESENTATION BY TAKA KONDO (KEK)

# COIL SUPPORT AND CHIMNEY

SMALL DECENTERING FORCE (1.6 tons/cm) } → NO DIFFICULTY
TOTAL COIL WEIGHT ≃ 20 tons

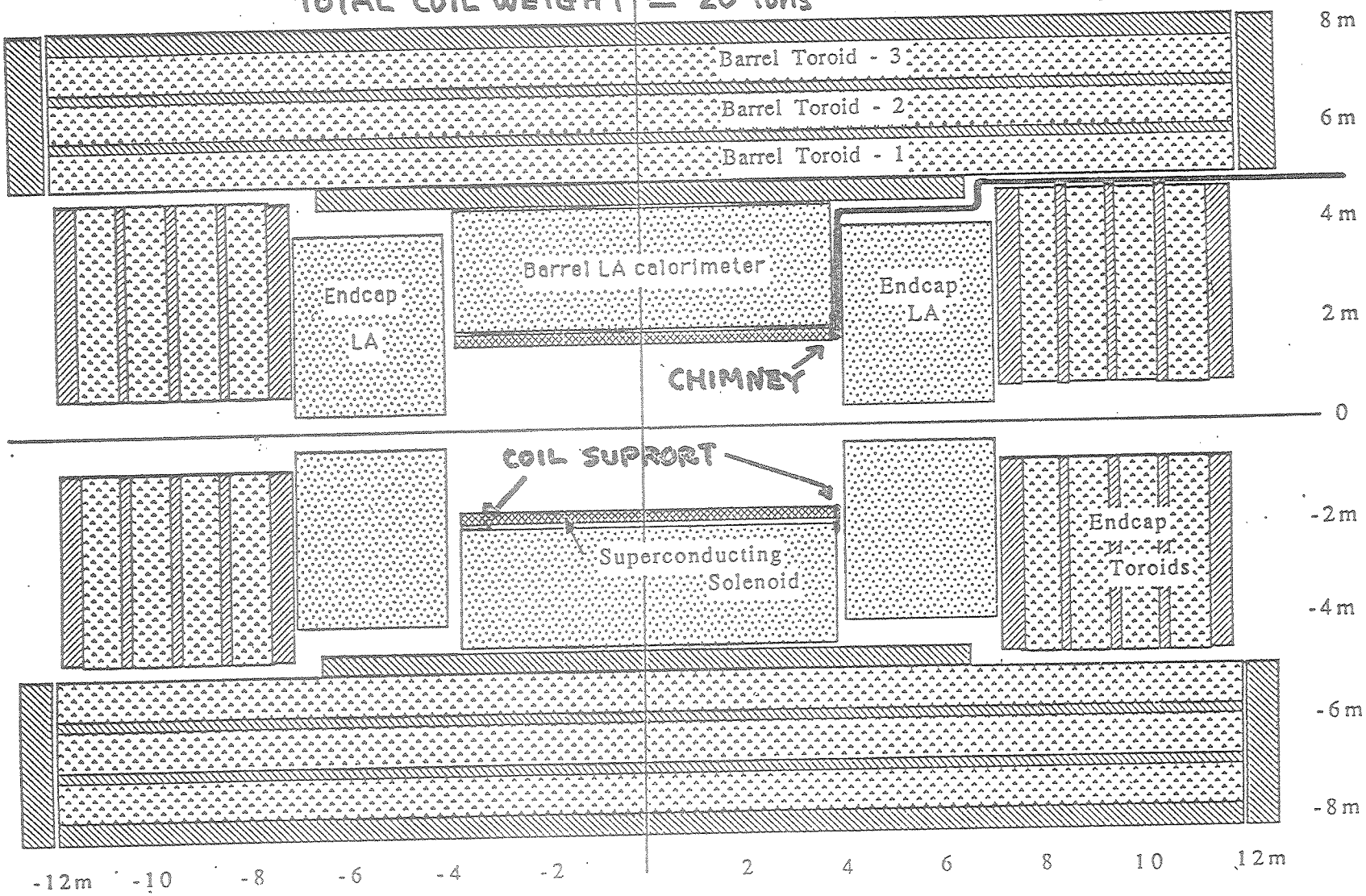


ACS Detector

T. Kondo

# A C S

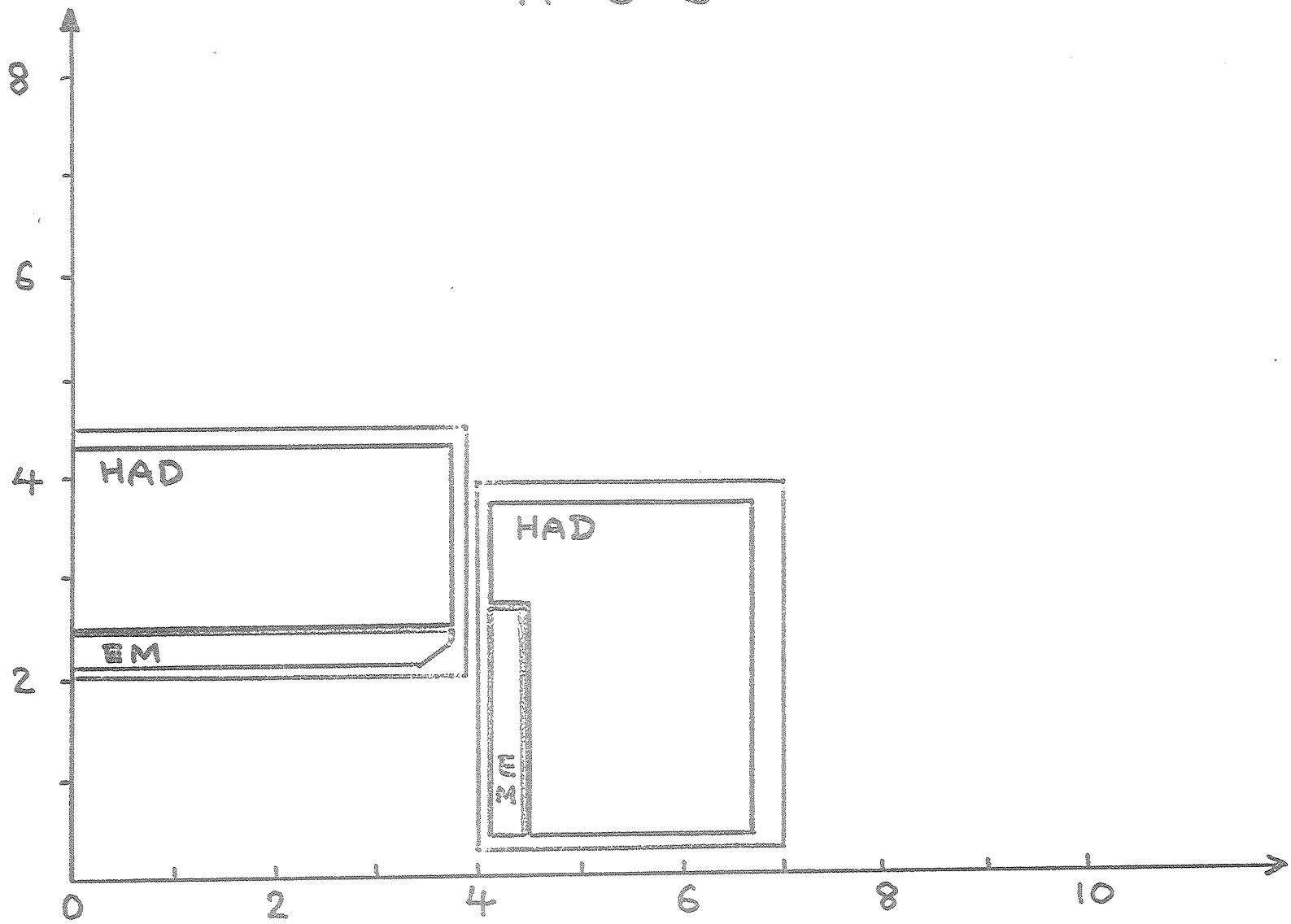


MOST OF PREAMPLIFIERS FOR LA (or WL) ARE IN THE REGION OF B < 0.5

⟶ SHIELDED PULSE TRANSFORMERS CAN BE USED.

# TWO CONFIGURATIONS WITH COIL INSIDE

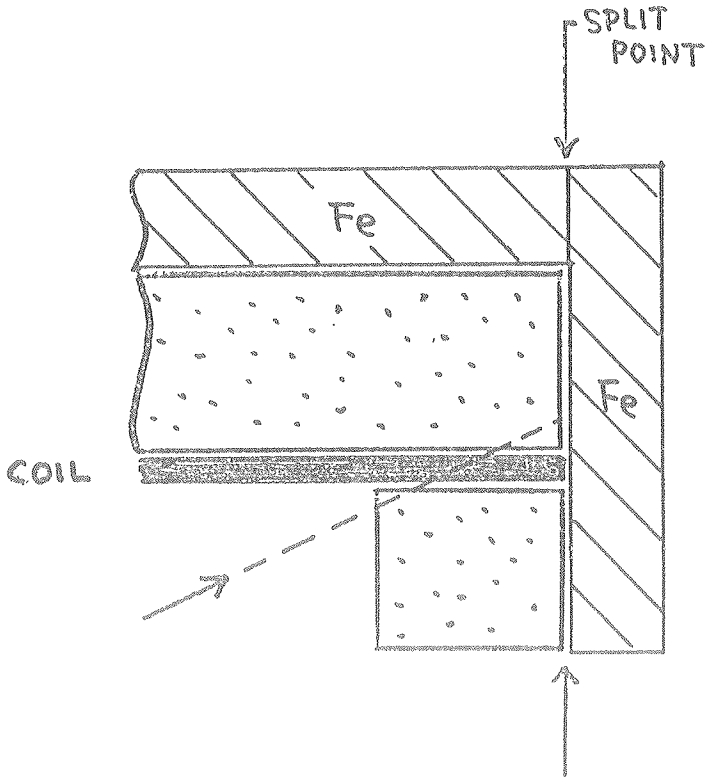


Mark II, CDF, VENUS, TOPAZ
OPAL

- uniform B for inner tracking
- B free in barrel region
- force on endcap yoke
- cracks (~30cm) in the middle of showers

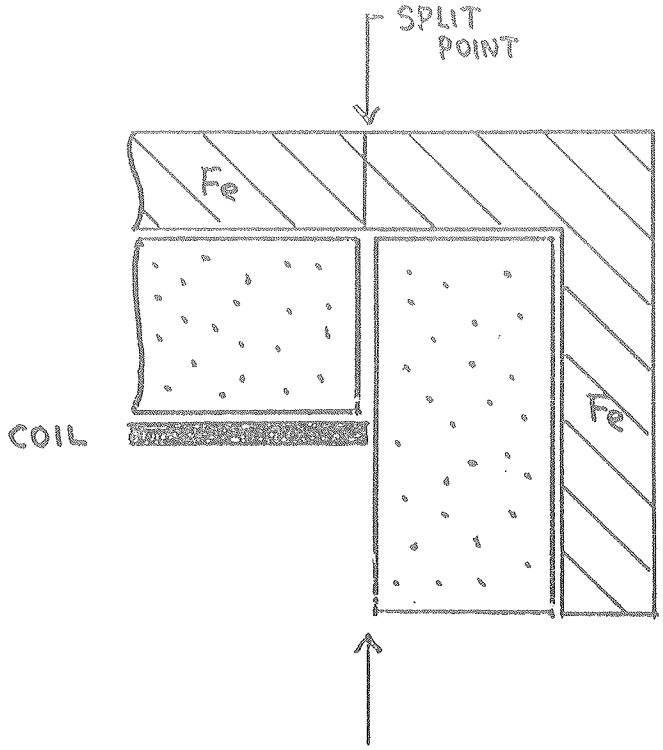


ZEUS

- non-uniform B
- stray field
- axial force on coil
- no cracks due to magnet

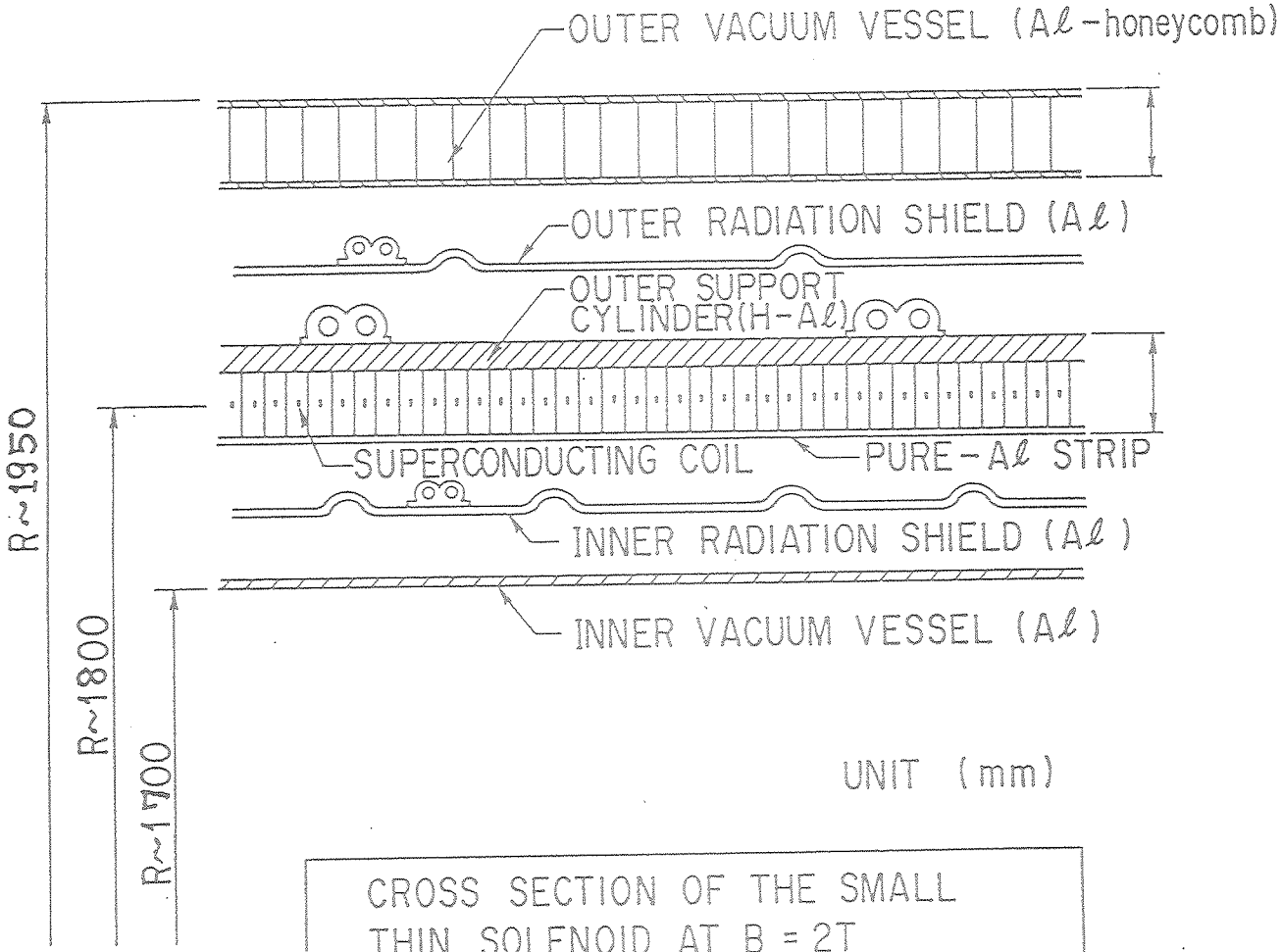


CROSS SECTION OF THE SMALL THIN SOLENOID AT B = 2T

# A C S

JULY, 21, '8

A.Y.

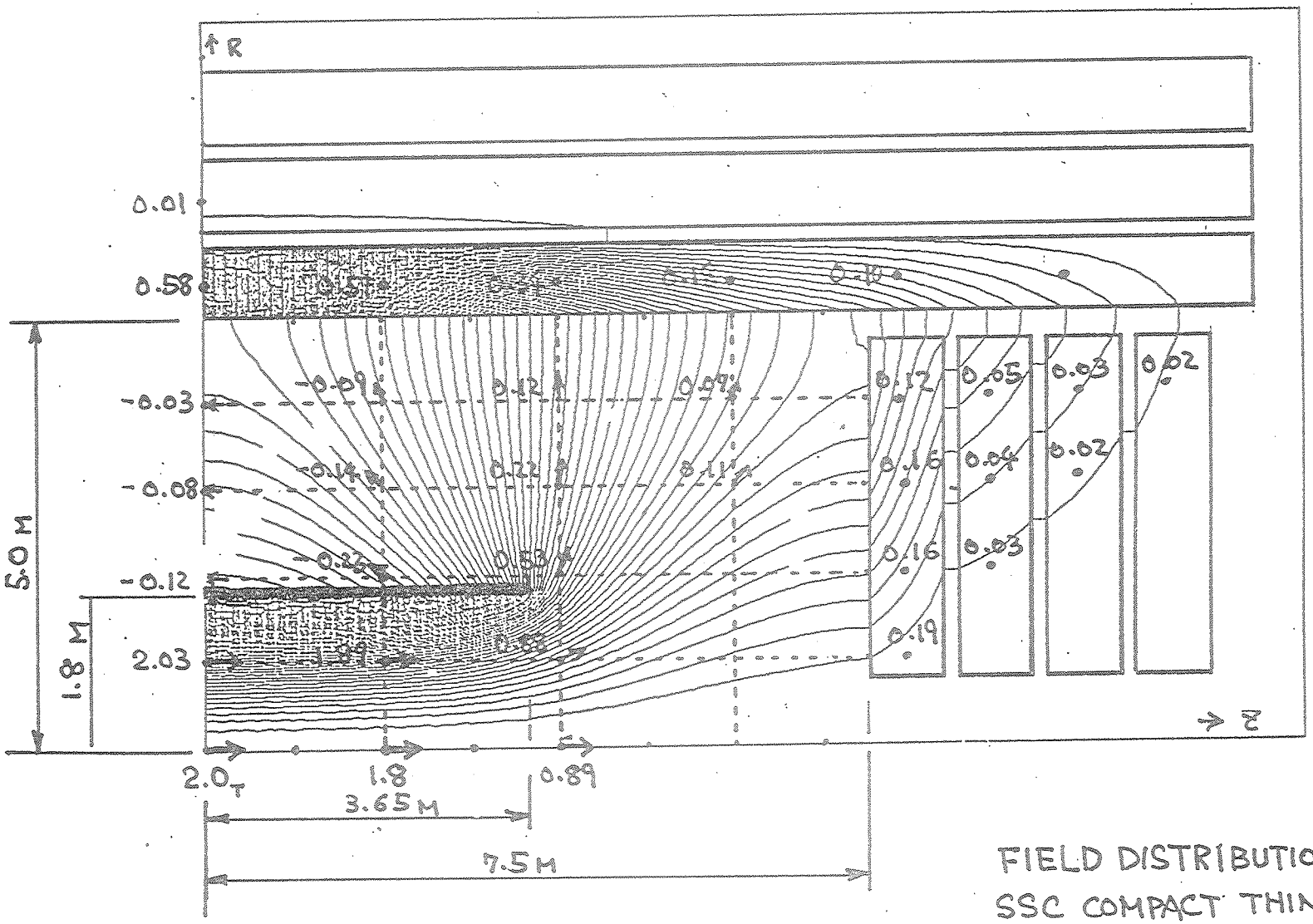


NOTE :

NO INSTRUMENTE
RETURN YOKES

MUON TOROIDS
WORK PARTLY
FLUX RETURN.

FIELD DISTRIBUTION IN
SSC COMPACT THIN SOLENOID
($NI = 2 \times 6.4 \times 10^6$ AT)

1989.10.24
A. Yamamoto

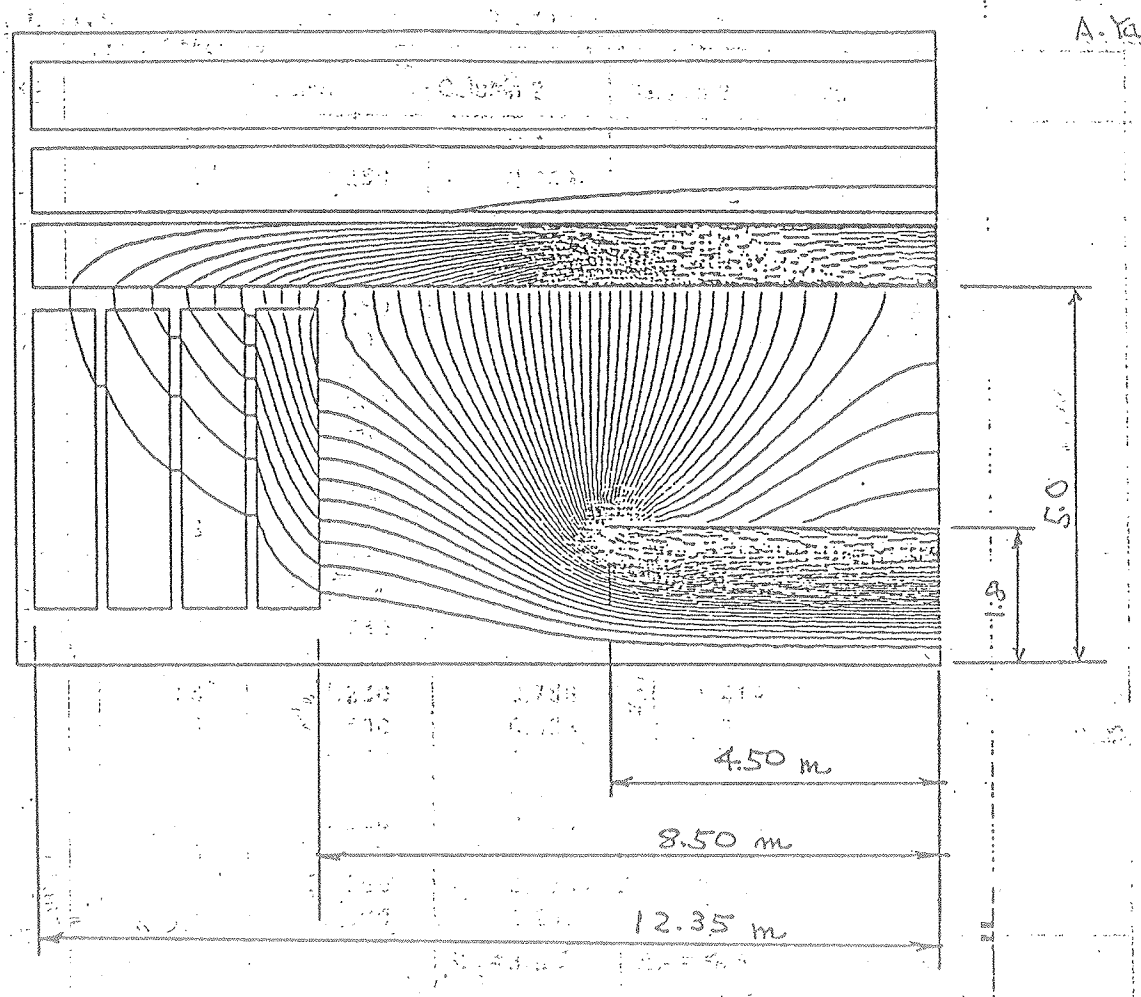


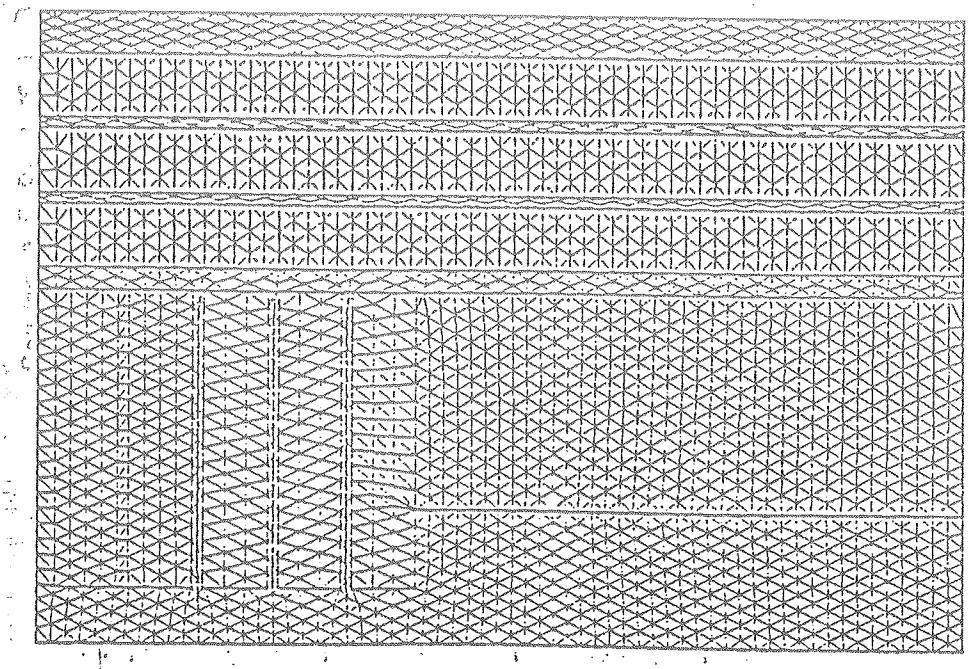

SSC Detector Solenoid ACS - V.2

# A C S

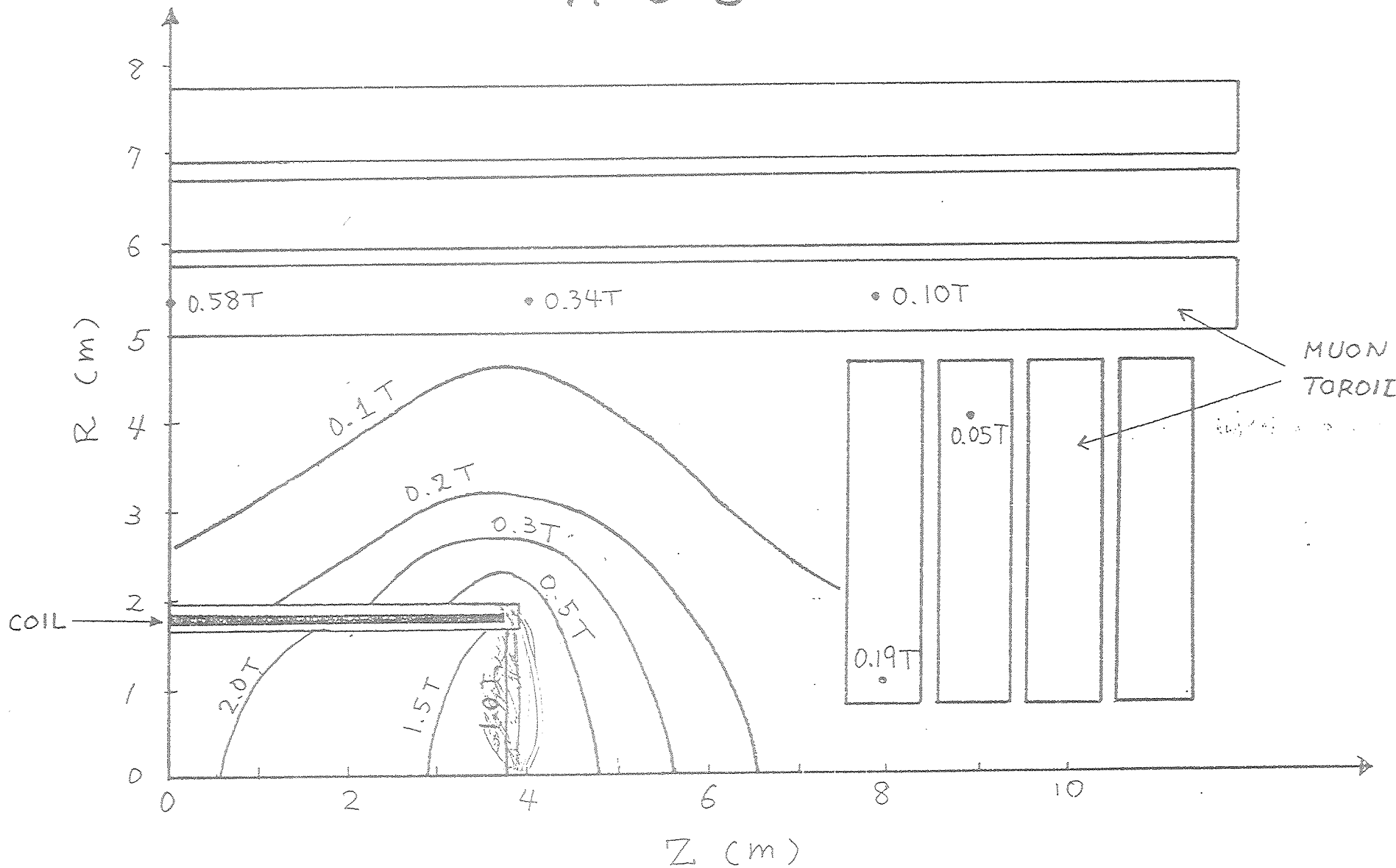
R (m)
Z (m)
0
1
2
3
4
5
6
7
8
0
2
4
6
8
10
0.58T
0.34T
0.10T
0.1T
0.2T
0.3T
0.5T
1.5T
2.0T
0.05T
0.19T
COIL
MUON
TOROID

| | Z [m] | $B_z$ (3.65) | $B_z$ (4.5 N) | | |
|---|---|---|---|---|---|
| | Column 1 | Column 2 | Column 3 | Column 4 | |
| 1 | 0.000 | 2.011 | 2.011 | 2.011 | |
| 2 | 0.250 | 2.009 | 2.010 | 2.010 | |
| 3 | 0.500 | 2.002 | 2.008 | 2.006 | |
| 4 | 0.750 | 1.990 | 2.005 | 2.000 | |
| 5 | 1.000 | 1.972 | 2.001 | 1.992 | |
| 6 | 1.250 | 1.948 | 1.994 | 1.979 | |
| 7 | 1.500 | 1.916 | 1.986 | 1.964 | |
| 8 | 1.750 | 1.875 | 1.976 | 1.944 | |
| 9 | 2.000 | 1.823 | 1.963 | 1.919 | |
| 10 | 2.250 | 1.758 | 1.947 | 1.888 | |
| 11 | 2.500 | 1.678 | 1.927 | 1.849 | -10% |
| 12 | 2.750 | 1.580 | 1.902 | 1.801 | |
| 13 | 3.000 | 1.464 | 1.868 | 1.741 | |
| 14 | 3.250 | 1.331 | 1.820 | 1.667 | |
| 15 | 3.500 | 1.187 | 1.756 | 1.578 | |
| 16 | 3.750 | 1.037 | 1.669 | 1.470 | |
| 17 | 4.000 | 0.891 | 1.556 | 1.347 | |
| 18 | 4.250 | 0.756 | 1.419 | 1.211 | |
| 19 | 4.500 | 0.636 | 1.264 | 1.066 | COIL END |
| 20 | 4.750 | 0.533 | 1.101 | 0.921 | |
| 21 | 5.000 | 0.449 | 0.942 | 0.784 | |
| 22 | 5.250 | 0.379 | 0.795 | 0.662 | |
| 23 | 5.500 | 0.324 | 0.667 | 0.555 | |
| 24 | 5.750 | 0.279 | 0.558 | 0.466 | |
| 25 | 6.000 | 0.243 | 0.469 | 0.393 | |
| | | $Z_c = 3.65$ | $Z_c = 4.5$ Notch (3.65-4.5) $J_N/J_0 = 1.5$ | $Z_c = 4.5$ (No Notch) | |
| SBdz | | (~6.6 T.m) | (~8.7 T.m) | (~8.2 T.m) | |

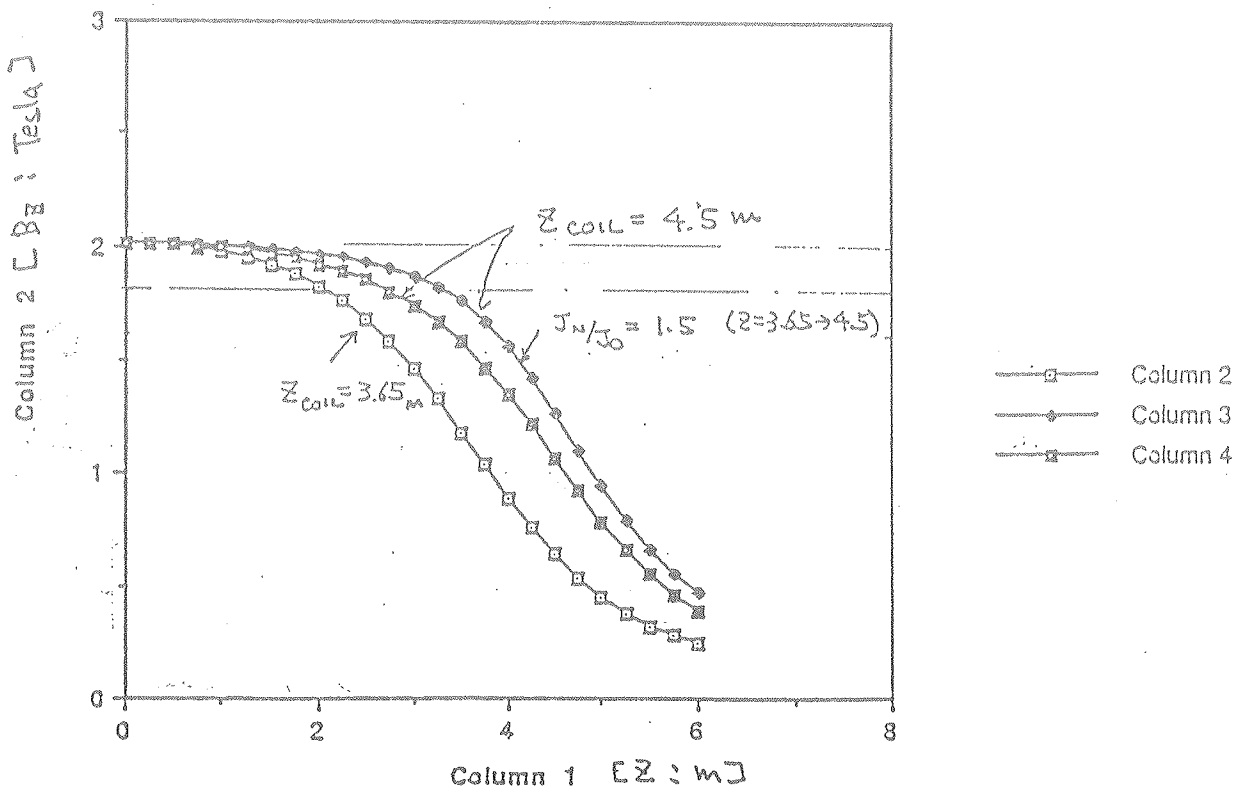


SSC SOLENOID

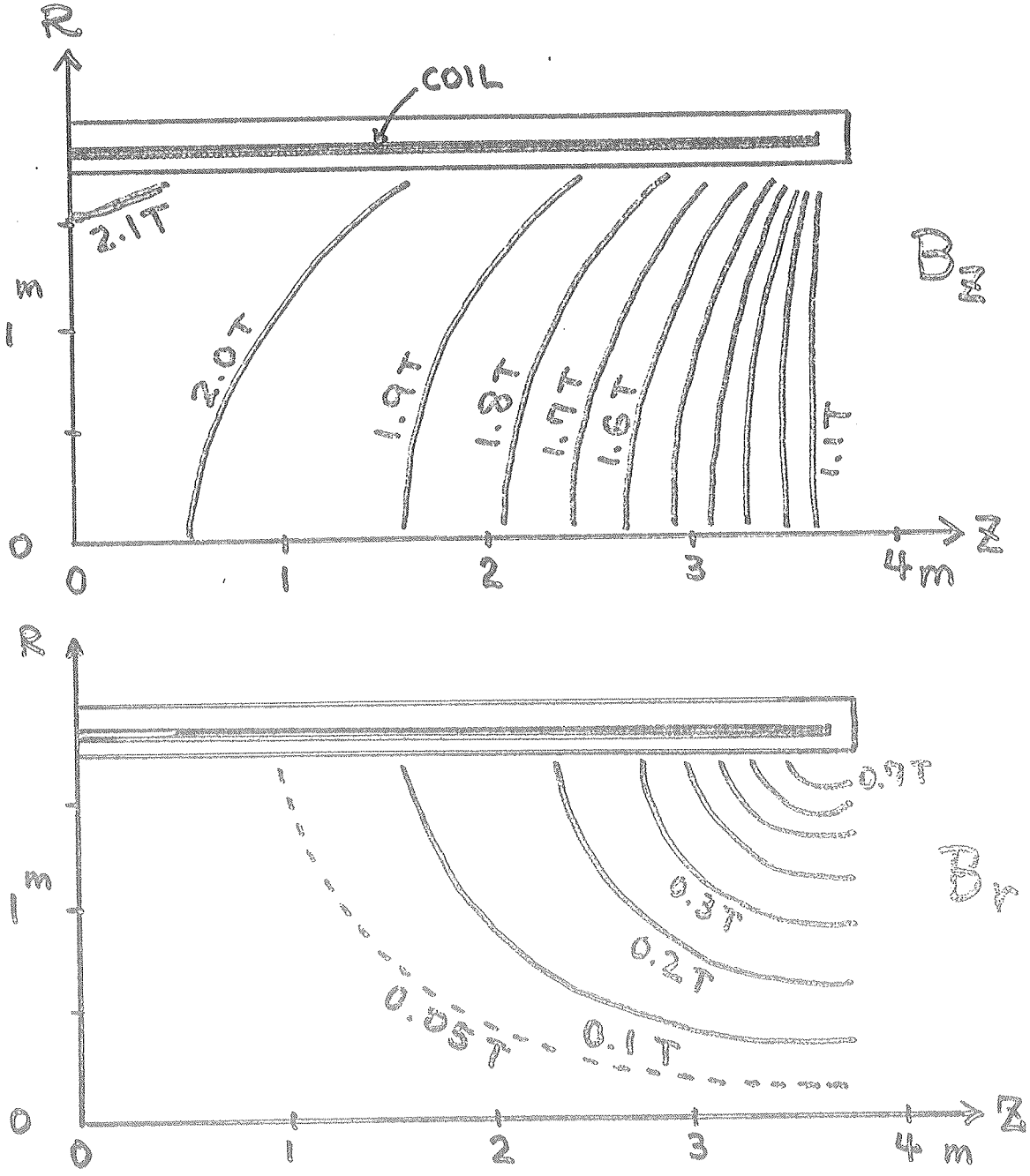


MAGNETIC FIELD OF ACS

ACS

RECONSTRUCTED $P_T$ ASSUMING UNIFORM B

Effect of Non-Uniform Field

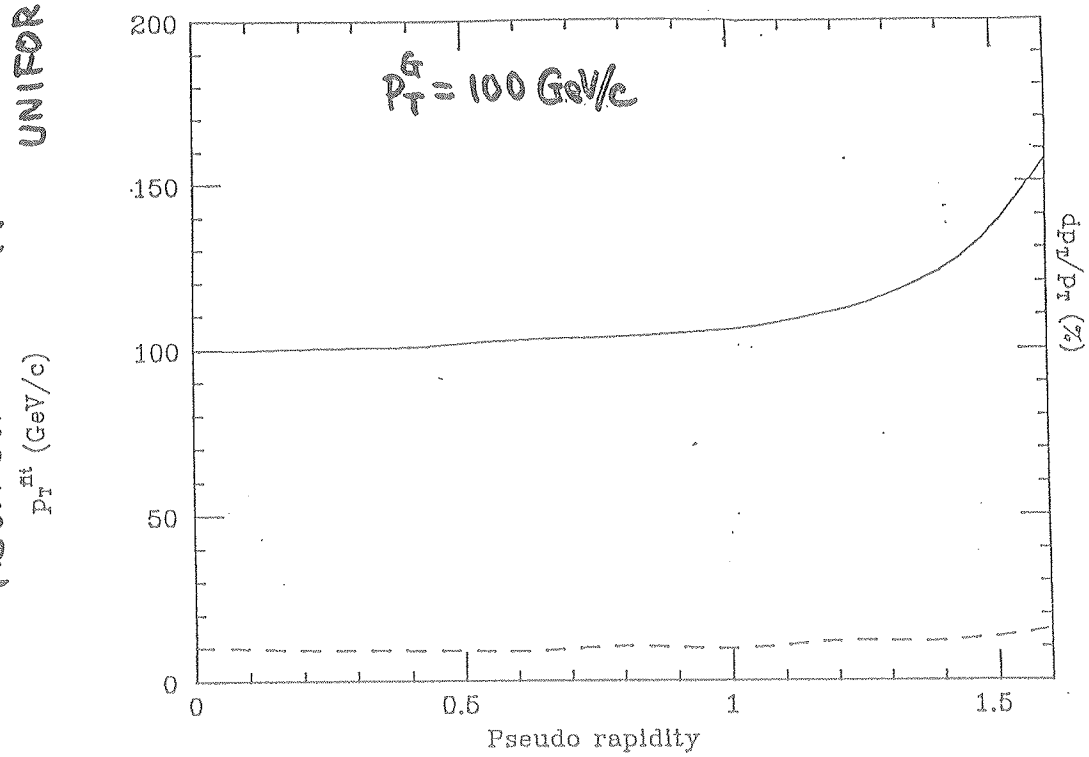


ANALYSING POWER

$\int B \times dl$ $r = 0 \sim 1.7$ m

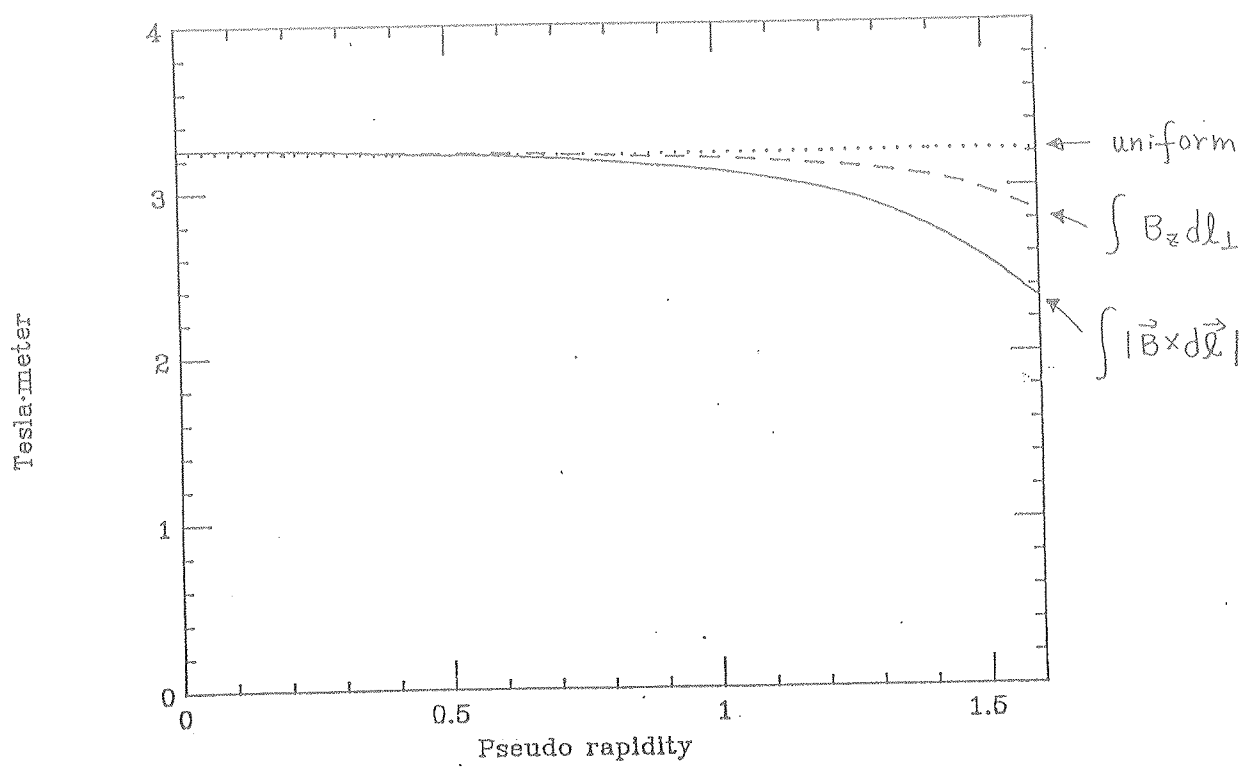


Y. TAKAIWA (KEK)

INPUT TITLE= FIELD (BT) MAP <LATTICE: LATSSC11> : FOR SSC COMPACT THIN SOLENOID BY A.Y.

| Z \ R= | 0. | 50. | 100. | 150. | 200. | 250. | 300. | 350. | 400. | 450. | 0. |
|---|---|---|---|---|---|---|---|---|---|---|---|
| 0. | 21181.5 | 21195.5 | 21231.9 | 21306.4 | 501.4 | 559.8 | 443.4 | 327.4 | 214.9 | 104.3 | 0.0 |
| 25. | 21174.5 | 21188.7 | 21221.4 | 21287.0 | 718.8 | 564.4 | 447.4 | 333.7 | 221.3 | 116.4 | 0.0 |
| 50. | 21153.7 | 21168.3 | 21211.4 | 21276.9 | 724.2 | 595.9 | 463.1 | 351.6 | 243.6 | 149.0 | 0.0 |
| 75. | 21118.5 | 21134.0 | 21174.3 | 21252.4 | 916.6 | 516.3 | 458.8 | 371.7 | 274.7 | 194.1 | 0.0 |
| 100. | 21068.0 | 21084.9 | 21131.7 | 21204.7 | 1102.7 | 651.5 | 541.4 | 427.9 | 323.7 | 235.5 | 0.0 |
| 125. | 21001.2 | 21019.9 | 21071.7 | 21157.1 | 1346.9 | 734.0 | 580.1 | 467.1 | 370.5 | 297.4 | 0.0 |
| 150. | 20915.6 | 20937.4 | 20997.0 | 21084.8 | 1294.3 | 837.3 | 663.1 | 519.4 | 432.5 | 361.2 | 0.0 |
| 175. | 20808.9 | 20834.9 | 20904.5 | 21004.0 | 968.0 | 1015.9 | 825.1 | 660.2 | 527.1 | 422.6 | 0.0 |
| 200. | 20676.6 | 20709.1 | 20791.8 | 20912.2 | 848.1 | 875.3 | 800.7 | 686.3 | 574.9 | 487.4 | 0.0 |
| 225. | 20511.3 | 20555.0 | 20661.4 | 20792.0 | 1234.7 | 1187.2 | 982.4 | 805.5 | 662.8 | 550.7 | 0.0 |
| 250. | 20302.4 | 20363.8 | 20512.7 | 20674.3 | 1759.1 | 1325.6 | 1093.5 | 897.8 | 741.8 | 631.1 | 0.0 |
| 275. | 20031.0 | 20121.4 | 20348.2 | 20546.3 | 1756.3 | 1296.4 | 1179.6 | 999.5 | 835.7 | 709.3 | 0.0 |
| 300. | 19667.9 | 19803.5 | 20142.5 | 20432.9 | 1672.7 | 1753.7 | 1447.5 | 1161.8 | 943.6 | 789.3 | 0.0 |
| 325. | 19173.6 | 19368.8 | 19908.7 | 20430.5 | 1875.7 | 1948.7 | 1588.0 | 1262.4 | 1022.2 | 859.6 | 0.0 |
| 350. | 18492.5 | 18758.0 | 19565.1 | 20725.5 | 2865.7 | 2537.0 | 1884.2 | 1423.1 | 1122.5 | 936.9 | 0.0 |
| 375. | 17576.1 | 17897.3 | 18985.7 | 21312.1 | 4639.1 | 3112.9 | 2143.3 | 1571.3 | 1221.9 | 1006.9 | 0.0 |
| 400. | 16391.5 | 16727.5 | 17965.1 | 21242.4 | 5595.7 | 3437.7 | 2262.7 | 1639.8 | 1272.5 | 1049.3 | 0.0 |
| 425. | 14947.9 | 15242.8 | 16371.1 | 19878.3 | 8753.8 | 4175.3 | 2533.2 | 1764.1 | 1341.2 | 1098.0 | 0.0 |
| 450. | 13314.3 | 13515.1 | 14273.8 | 16551.4 | 8168.5 | 4486.5 | 2684.3 | 1840.6 | 1388.2 | 1118.2 | 0.0 |
| 475. | 11597.2 | 11684.4 | 11971.0 | 12342.8 | 8261.5 | 4352.4 | 2653.5 | 1809.0 | 1378.9 | 1126.1 | 0.0 |
| 500. | 9919.3 | 9905.3 | 9817.1 | 9246.0 | 6621.0 | 3948.0 | 2548.1 | 1800.4 | 1372.6 | 1124.0 | 0.0 |
| 525. | 8373.9 | 8295.0 | 7995.5 | 7170.0 | 5365.8 | 3557.2 | 2414.6 | 1741.3 | 1326.1 | 1090.3 | 0.0 |
| 550. | 7022.8 | 6910.5 | 6535.7 | 5738.9 | 4449.9 | 3167.2 | 2243.4 | 1645.5 | 1277.6 | 1051.9 | 0.0 |
| 575. | 5879.3 | 5761.0 | 5390.0 | 4703.0 | 3741.8 | 2784.7 | 2045.3 | 1540.6 | 1209.0 | 1000.4 | 0.0 |
| 600. | 4936.1 | 4826.0 | 4492.9 | 3925.0 | 3188.3 | 2451.7 | 1854.9 | 1422.3 | 1121.1 | 930.9 | 0.0 |
| 625. | 4172.4 | 4074.9 | 3788.7 | 3324.8 | 2744.2 | 2166.2 | 1668.4 | 1297.1 | 1034.5 | 861.8 | 0.0 |
| 650. | 3557.5 | 3475.2 | 3234.5 | 2853.8 | 2385.8 | 1912.8 | 1500.6 | 1176.4 | 941.6 | 784.6 | 0.0 |
| 675. | 3066.6 | 2998.0 | 2757.6 | 2481.0 | 2092.3 | 1696.5 | 1341.8 | 1054.2 | 844.1 | 703.2 | 0.0 |
| 700. | 2674.6 | 2618.9 | 2453.0 | 2186.1 | 1854.4 | 1512.1 | 1198.4 | 939.8 | 748.1 | 624.1 | 0.0 |
| 725. | 2359.6 | 2317.9 | 2184.2 | 1954.3 | 1661.5 | 1357.6 | 1071.9 | 831.7 | 652.9 | 542.1 | 0.0 |
| 750. | 2100.0 | 2077.6 | 1979.0 | 1779.1 | 1508.8 | 1229.1 | 960.6 | 729.2 | 557.6 | 463.6 | 0.0 |
| 775. | 1867.8 | 1879.1 | 1829.6 | 1646.6 | 1397.2 | 1128.0 | 868.1 | 637.3 | 462.5 | 387.9 | 0.0 |
| 800. | 1627.9 | 1697.3 | 1744.3 | 1559.7 | 1315.8 | 1056.3 | 798.5 | 560.6 | 367.0 | 305.7 | 0.0 |
| 825. | 1339.1 | 1487.2 | 1712.9 | 1517.0 | 1270.9 | 1013.4 | 754.7 | 507.0 | 276.8 | 219.0 | 0.0 |
| 850. | 988.0 | 1093.2 | 2040.8 | 1514.5 | 1838.3 | 999.0 | 1780.2 | 1507.0 | 1335.1 | 912.5 | 0.0 |
| 875. | 618.2 | 599.1 | 2015.5 | 1680.9 | 1756.3 | 1687.0 | 1666.8 | 1580.8 | 1250.2 | 992.6 | 0.0 |
| 900. | 346.8 | 248.2 | 1211.7 | 1357.4 | 1509.1 | 1602.6 | 1522.3 | 1431.9 | 1166.1 | 822.1 | 0.0 |
| 925. | 200.2 | 150.8 | 912.1 | 1154.9 | 1344.5 | 1461.7 | 1506.0 | 1373.3 | 1204.4 | 877.2 | 0.0 |
| 950. | 125.8 | 126.7 | 412.1 | 401.8 | 434.1 | 393.1 | 486.0 | 517.5 | 550.5 | 488.9 | 0.0 |
| 975. | 79.7 | 69.7 | 342.2 | 372.8 | 368.9 | 415.5 | 447.2 | 481.0 | 517.2 | 547.9 | 0.0 |

UNIFORM WINDING

INPUT TITLE= FIELD (BT) MAP <LATTICE: LATSSC11> : FOR SSC COMPACT TRIM SOLENOID BY A.Y.

| Z | R= 0. | 50. | 100. | 150. | 200. | 250. | 300. | 350. | 400. | 450. | 0. |
|---|---|---|---|---|---|---|---|---|---|---|---|
| 0. | 2.011 20829.4 | 20854.0 | 20923.6 | 21037.4 | 720.1 | 727.7 | 564.7 | 409.0 | 264.3 | 127.0 | 0.0 |
| 25. | 2.010 20817.2 | 20842.3 | 20913.0 | 21014.9 | 940.1 | 734.6 | 570.6 | 417.0 | 272.3 | 141.8 | 0.0 |
| 50. | 2.006 20780.5 | 20806.8 | 20881.5 | 20996.1 | 937.1 | 772.3 | 591.4 | 439.5 | 299.4 | 181.2 | 0.0 |
| 75. | 2.000 20717.5 | 20746.5 | 20828.1 | 20956.9 | 1059.0 | 688.3 | 594.3 | 466.7 | 337.8 | 235.3 | 0.0 |
| 100. | 1.992 20626.0 | 20658.9 | 20750.9 | 20887.4 | 1356.3 | 850.3 | 687.9 | 531.3 | 395.1 | 285.8 | 0.0 |
| 125. | 1.979 20502.7 | 20540.7 | 20647.4 | 20810.4 | 1557.9 | 942.5 | 738.9 | 580.7 | 451.0 | 356.5 | 0.0 |
| 150. | 1.964 20341.6 | 20387.2 | 20513.5 | 20699.7 | 1624.6 | 1074.6 | 834.3 | 645.7 | 521.9 | 428.3 | 0.0 |
| 175. | 1.944 20136.7 | 20191.9 | 20344.6 | 20569.4 | 1367.2 | 1298.8 | 1018.2 | 793.3 | 622.4 | 495.5 | 0.0 |
| 200. | 1.919 19879.0 | 19946.2 | 20134.1 | 20414.2 | 1094.1 | 1179.0 | 1008.1 | 828.1 | 676.0 | 565.1 | 0.0 |
| 225. | 1.888 19555.5 | 19639.5 | 19872.9 | 20211.4 | 1750.4 | 1530.3 | 1200.9 | 950.1 | 765.1 | 630.0 | 0.0 |
| 250. | 1.849 19153.0 | 19257.1 | 19550.1 | 19984.1 | 2167.3 | 1683.3 | 1317.1 | 1042.8 | 843.4 | 709.2 | 0.0 |
| 275. | 1.801 18651.8 | 18781.1 | 19149.7 | 19703.7 | 2473.2 | 1734.1 | 1418.1 | 1143.1 | 932.6 | 783.0 | 0.0 |
| 300. | 1.741 18030.3 | 18189.7 | 18651.3 | 19353.7 | 2633.7 | 2183.9 | 1660.8 | 1285.8 | 1027.2 | 853.7 | 0.0 |
| 325. | 1.667 17266.8 | 17456.6 | 18027.9 | 18946.8 | 2579.3 | 2300.9 | 1756.7 | 1361.3 | 1090.0 | 912.4 | 0.0 |
| 350. | 1.578 16337.5 | 16555.6 | 17240.7 | 18426.0 | 3592.0 | 2783.7 | 1989.7 | 1485.8 | 1167.6 | 974.4 | 0.0 |
| 375. | 1.470 15232.2 | 15463.8 | 16240.8 | 17786.9 | 4737.4 | 3152.2 | 2170.9 | 1593.6 | 1241.6 | 1025.1 | 0.0 |
| 400. | 1.349 13954.9 | 14175.0 | 14971.5 | 16911.0 | 4751.1 | 3245.8 | 2207.6 | 1621.0 | 1266.9 | 1049.1 | 0.0 |
| 425. | 1.21 12537.0 | 12713.7 | 13392.3 | 15499.9 | 6926.8 | 3688.1 | 2368.3 | 1693.3 | 1305.5 | 1076.4 | 0.0 |
| 450. | 1.066 11039.4 | 11145.6 | 11560.0 | 12889.7 | 6505.6 | 3837.9 | 2444.1 | 1728.3 | 1325.8 | 1078.6 | 0.0 |
| 475. | 0.921 9542.3 | 9570.0 | 9665.7 | 9730.2 | 6586.8 | 3693.1 | 2371.7 | 1674.9 | 1294.0 | 1069.7 | 0.0 |
| 500. | 0.784 8127.6 | 8088.2 | 7939.3 | 7392.6 | 5369.4 | 3355.7 | 2255.6 | 1639.4 | 1272.5 | 1052.1 | 0.0 |
| 525. | 0.662 6852.1 | 6772.6 | 6492.8 | 5803.5 | 4407.8 | 3019.4 | 2118.4 | 1567.2 | 1216.1 | 1009.1 | 0.0 |
| 550. | 0.555 5751.6 | 5653.0 | 5335.5 | 4691.0 | 3686.2 | 2690.3 | 1958.0 | 1469.5 | 1159.1 | 963.3 | 0.0 |
| 575. | 0.466 4826.5 | 4727.8 | 4423.3 | 3874.5 | 3120.8 | 2370.0 | 1780.4 | 1367.1 | 1088.0 | 907.6 | 0.0 |
| 600. | 0.393 4066.0 | 3976.0 | 3706.8 | 3254.3 | 2673.0 | 2090.2 | 1610.8 | 1255.6 | 1002.7 | 838.7 | 0.0 |
| 625. | 3450.3 | 3371.5 | 3141.5 | 2771.7 | 2310.5 | 1849.3 | 1447.0 | 1140.8 | 919.7 | 771.1 | 0.0 |
| 650. | 2953.9 | 2887.7 | 2694.6 | 2390.2 | 2016.0 | 1635.6 | 1299.9 | 1031.5 | 833.3 | 698.2 | 0.0 |
| 675. | 2556.5 | 2501.4 | 2340.4 | 2086.4 | 1773.4 | 1452.7 | 1161.7 | 922.3 | 744.3 | 623.1 | 0.0 |
| 700. | 2238.2 | 2193.5 | 2060.1 | 1844.8 | 1575.9 | 1296.4 | 1037.3 | 820.7 | 657.7 | 550.7 | 0.0 |
| 725. | 1981.3 | 1948.1 | 1840.6 | 1654.2 | 1415.2 | 1165.3 | 927.7 | 725.3 | 572.7 | 476.9 | 0.0 |
| 750. | 1768.5 | 1751.2 | 1672.4 | 1509.8 | 1287.8 | 1056.3 | 831.6 | 635.6 | 488.4 | 406.7 | 0.0 |
| 775. | 1576.7 | 1587.7 | 1549.7 | 1400.2 | 1194.5 | 970.5 | 751.9 | 555.4 | 404.8 | 339.3 | 0.0 |
| 800. | 1376.7 | 1436.7 | 1480.0 | 1328.3 | 1126.2 | 909.5 | 691.9 | 488.8 | 321.4 | 266.7 | 0.0 |
| 825. | 1133.8 | 1260.2 | 1497.2 | 1293.2 | 1088.1 | 873.0 | 654.2 | 442.3 | 243.2 | 189.9 | 0.0 |
| 850. | 837.2 | 926.7 | 1732.7 | 1291.4 | 1567.3 | 860.8 | 1523.4 | 1293.6 | 1147.9 | 784.9 | 0.0 |
| 875. | 524.1 | 508.0 | 1779.6 | 1429.0 | 1494.8 | 1460.4 | 1426.2 | 1355.7 | 1075.6 | 855.0 | 0.0 |
| 900. | 294.4 | 210.5 | 1099.1 | 1154.2 | 1285.0 | 1366.8 | 1301.7 | 1227.9 | 1001.9 | 708.3 | 0.0 |
| 925. | 170.4 | 128.5 | 794.8 | 981.8 | 1144.3 | 1246.6 | 1287.0 | 1176.6 | 1034.5 | 755.2 | 0.0 |
| 950. | 107.4 | 108.5 | 346.4 | 346.2 | 373.9 | 338.7 | 418.7 | 445.6 | 474.3 | 421.2 | 0.0 |
| 975. | 68.2 | 59.7 | 329.1 | 321.2 | 335.0 | 357.9 | 385.2 | 414.4 | 445.6 | 472.0 | 0.0 |

ACS

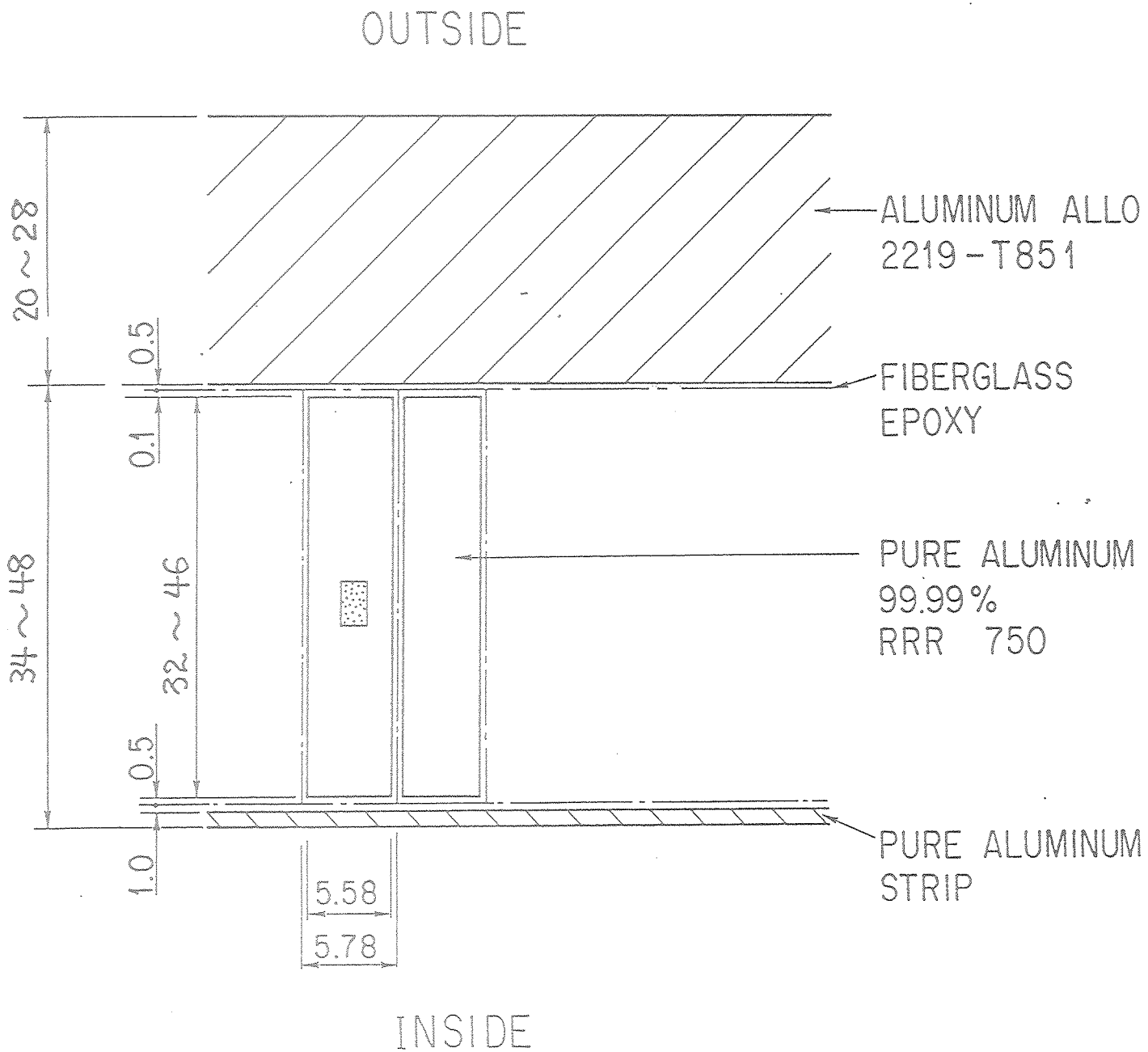
OUTSIDE
ALUMINUM ALLO
2219-T851
FIBERGLASS
EPOXY
PURE ALUMINUM
99.99%
RRR 750
PURE ALUMINUM
STRIP
20~28
0.5
0.1
34~48
32~46
0.5
1.0
5.58
5.78
INSIDE

Technicanl Developments on Superconducting Solenoids for Detector

| | |
|---|---|
| CELLO : | introduction of Al stabilized superconductor, |
| TOPAZ/CDF/VENUS : | removal of internal bobbin, |
| CDF : | co-extruded Al stabilized superconductor, |
| TOPAZ : | inner internal winding, |
| VENUS : | CFRP outer vacuum vessel, |
| ALEPH : | helium circulation with thermo-siphon, |
| ZEUS : | air-core (iron-free) solenoid, |
| BESS(AstroMag) : | statisc indirect cooling, honeycomb outer vacuum vessel |

Introduction of a new design concept

$$R = \frac{E(\text{stored energy})}{M(\text{active cold mass})}$$

$$R = \frac{E}{M} = H(T_1) - H(T_0) \quad \text{where } H = \int C_p dT.$$

$$R = H(80K) - H(4K) \cong 10 \text{ kJ/kg}$$

| experiment | E (MJ) | M (ton) | R (kJ/kg) |
|---|---|---|---|
| CDF | 30 | 5.6 | 5.4 |
| TOPAZ | 20 | 4.5 | 4.4 |
| VENUS | 12 | 4.3 | 2.8 |
| ALEPH | 137 | 25 | 5.5 |
| BESS | 0.82 | 0.12 | ~ 7 |
| ZEUS | 16 | 1.9 | 8.4 |
| → ACS | 120 | 12.5 | 9.6 (aggressive) |
| | | or 17.4 | 6.9 (conservative) |

NEED MECHANISM FOR UNIFORM ENERGY DUMP AT QUENCH WITH ENERGY ETRACTION FAILURE (WORST CASE) → INTRODUCING AXIAL ALUMINUI STRIPS

# STRUCTURE AT THE EDGE

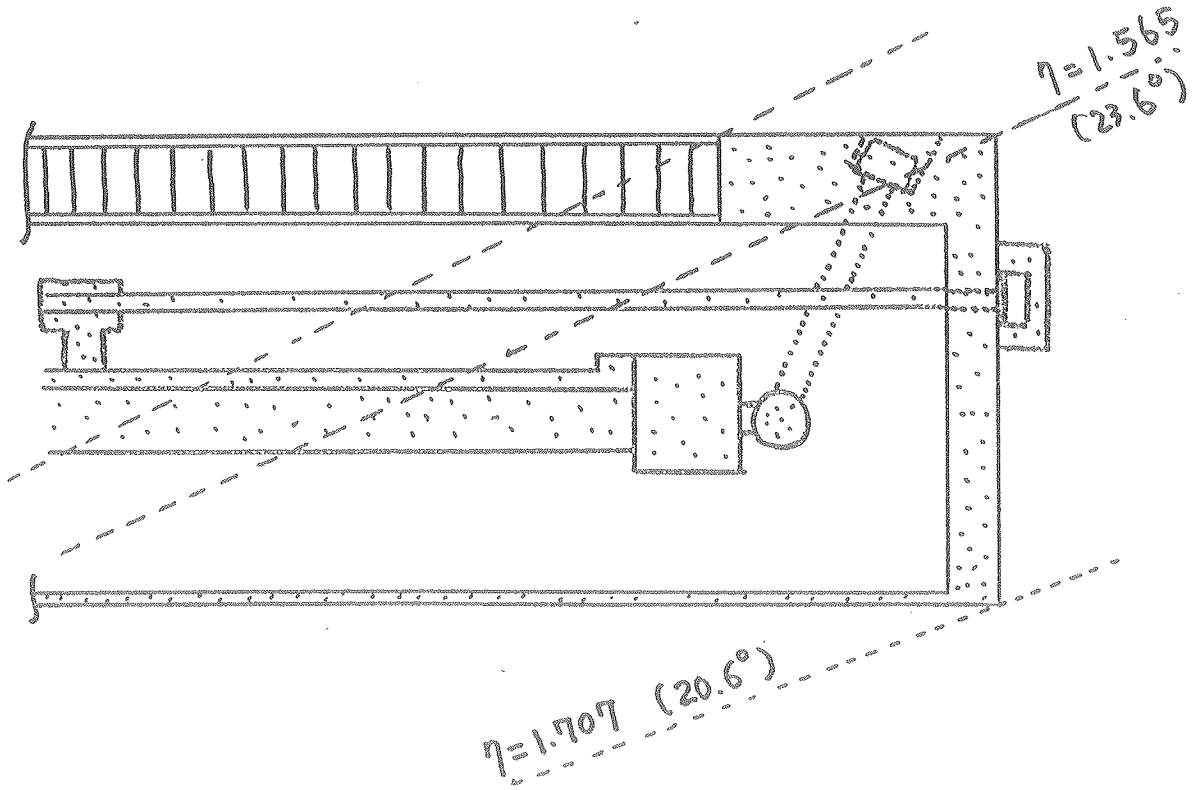


# TRANSPARENCY OF THIN SOLENOID

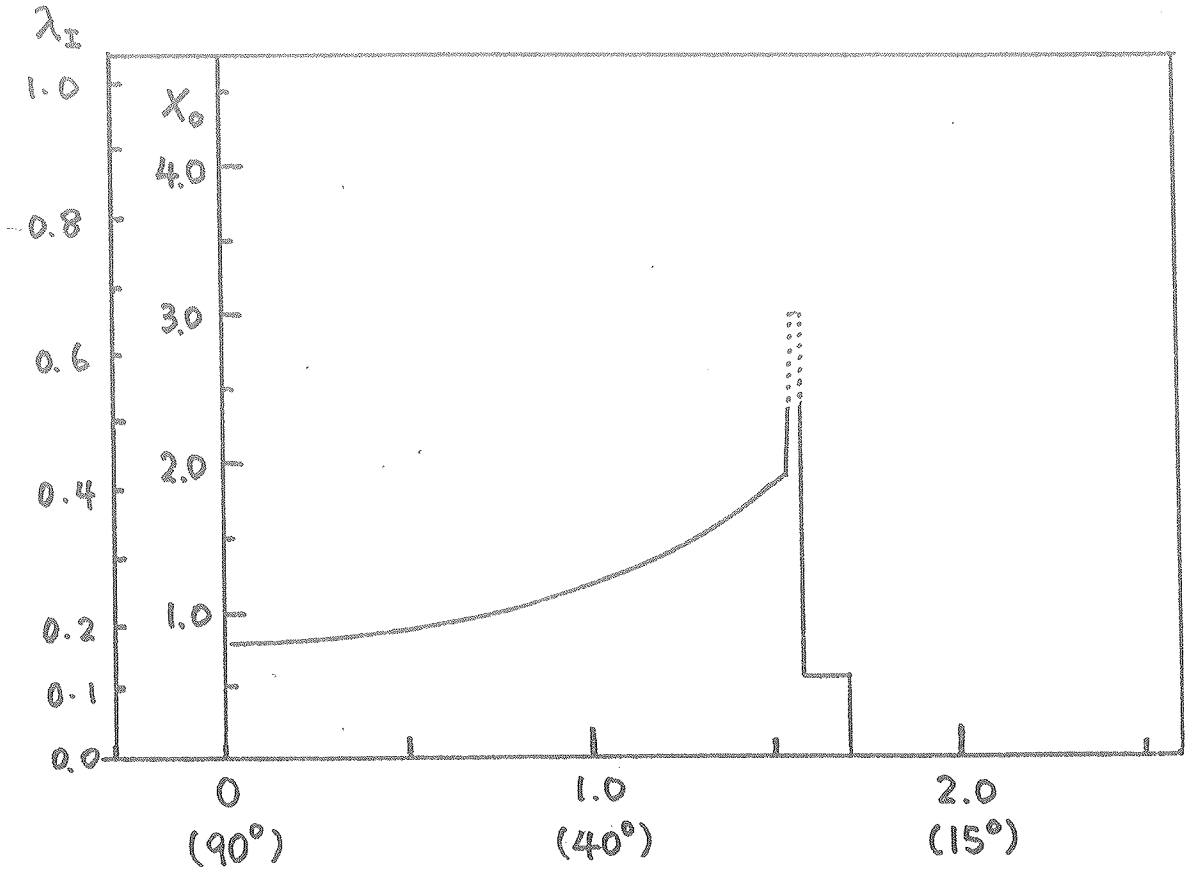

# MAGNETIC FORCES

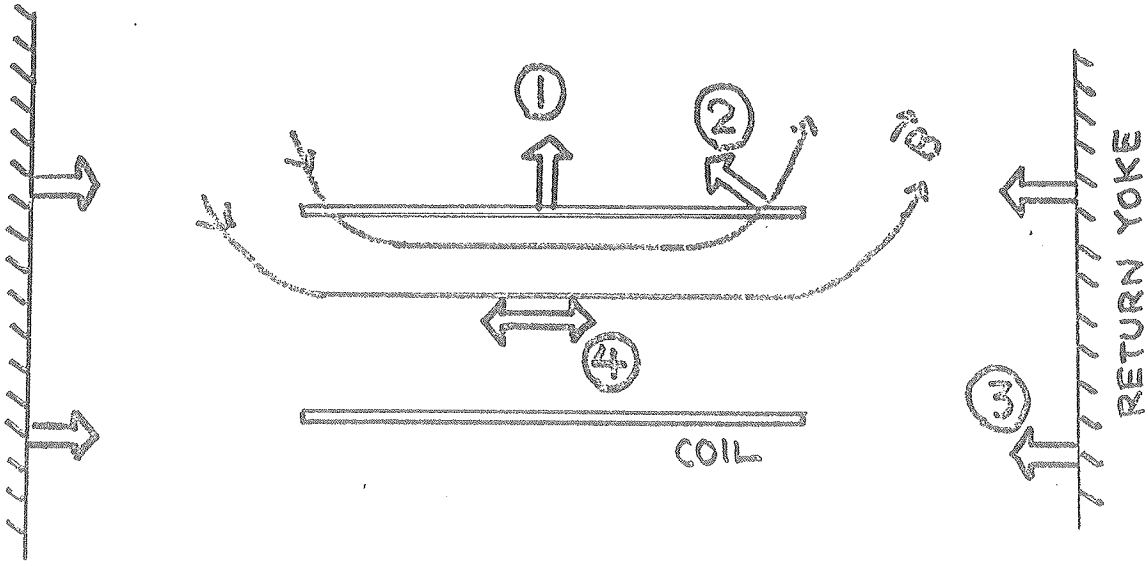


① HOOP FORCES

$$P = \frac{B^2}{2\mu_0} \simeq 16\ \mathrm{kg/cm^2} \quad (\text{AT } B_c = 2T)$$

② AXIAL COMPRESSIVE FORCES

MAXIMUM AT $Z = 0$, $\int F_z\,dz \simeq 1850$ TONS

(AT $B_c = 2T$)

③ AXIAL FORCES ON RETURN YOKES

60 TONS / END

④ DECENTERING FORCES

1.6 TONS / CM OF DISPLACEMENT

③ & ④ NO WORRY

① & ② SUPPORTED BY COIL + SUPPORT CYLINDER

## Stress and Strain at B = 2 Tesla

| Design | conservative | aggreesive |
|---|---|---|
| Hoop Force | | |
| $\sigma_\phi$ (coil) | 3.4 kgf/mm$^2$ | 4 kgf/mm$^2$ |
| $\sigma_\phi$ (cylinder) | 4.2 kgf/mm$^2$ | 7.3 kgf/mm$^2$ |
| strain | 0.049 % | 0.086 % |
| Axial Force at z = 0 | | |
| $\sigma_z$ (coil) | −2.0 kgf/mm$^2$ | −2.8 kgf/mm$^2$ |
| $\sigma_z$ (cylinder) | −2.5 kgf/mm$^2$ | −3.4 kgf/mm$^2$ |
| strain | −0.029 % | −0.041 % |

## Properties of aluminun at 4°K

| material | pure Al (RRR=750) | 2219T851 | 5083-O | 6063T5 | |
|---|---|---|---|---|---|
| Youngs Modulus | 6900 | 8500 | ~7500 | 7700 | kgf/mm$^2$ |
| Yield Stength | ~ 4 | 48.4 | 17.8 | > 20 | kgf/mm$^2$ |
| Allowable stress | ~ 2.7 | ~ 32 | ~ 12 | ~ 13.3 | kgf/mm$^2$ |

# SUMMARY OF ACS MAGNET

1. A THIN AIR-CORE SOLENOID INSIDE CALORIMETER SEEMS TO HAVE LITTLE INFLUENCE ON HERMETICITY AND e-ID.

2. TECHNOLOGY EXISTS FOR AIR-CORE SOLENOID WITH

   $B_c \simeq 2T$ , $L = 8M$ , $R = 1.8M$

   THICKNESS $\sim 25CM$ , $0.9 \sim 1.1 X_0$ , $0.2 \sim 0.25 \lambda_0$

   BY INTRODUCING ALUMINUM-HONEYCOMB
   AXIAL ALUMINUM STRIPS
   $E/M = 7 \sim 10$ KJ/Kg

   AND VERIFIED BY QUENCH SIMULATIONS.

3. AN AIR-CORE SOLENOID IS FABRICATED FOR A BALLOON EXPERIMENT USING THESE TECHNIQUES.

4. FIELD NON-UNIFORMITY FOR TRACKING

   $-1m < z < 1m$ $\Delta B/B = \pm 2\%$
   $-2m < z < 2m$ $\pm 6\%$

   $$\int |\vec{B} \times d\vec{l}|_\eta / \int |\vec{B} \times d\vec{l}|_{\eta=0} = 0.97\ (\eta = 1.0),\ 0.81\ (\eta = 1.5)$$

5. MAGNETIC FORCES ARE TOLERABLE.

6. FIELD STRENGTH IN CALORIMETER REGIONS

   BARREL REGION : MOSTLY $< 0.3T$
   ENDCAP REGION : MOSTLY $< 0.5T$

   $\longrightarrow$ COMPATIBLE WITH SHIELDED PULSE TRANSFORMERS

PRESENTATION BY AKIRA YAMAMOTO (KEK)

# A THIN SUPERCONDUCTING SOLENOID

# FOR

# AIR-CORE SOLENOID DETECTOR

# A C S

Akira YAMAMOTO

KEK

* PRESENTED A SSC DETECTOR COLLABORATION MEETING HELD AT ANL, Nov. 17, '89.

CONTENTS

1. EXPERIENCE IN THE TOPAZ THIN SOLENOID

2. DEVELOPMENT OF A THIN SOLENOID FOR PARTICLE ASTROPHYSICS

3. DESIGN STUDY OF THE SSC-ACS THIN SOLENOID

# BASIC CHARACTERISTICS
# ON
# SSC-ACS DETECTOR

1. DIMENSION: $3.6\,m^{\phi} \times 9.0\,m^{L}$ (COIL)
   $3.4\,m^{\phi} \times \sim 7.0\,m$ (USEFUL)

2. MAG. FIELD: 2 TESLA ($\Delta B/B \lesssim 10\sim20\%$)
   IRON FREE

3. TRANSPERENCY: $\lesssim 1\,X_0$ ($\theta = 90°$)
   $\lesssim 2\,X_0$ ($\theta \simeq 30°$)

4. SAFETY AGNST QUENCH:
   $T_{PEAK} \lesssim 100\,K$

5. FORCE: $F_{z\,COIL} \approx 2000$ tonf
   $\sigma_{z\,COIL} \lesssim 3\sim4$ kgf/mm²

6. COOLING: $2^{\phi}$He + THERMO-SIPHON

7. TEST: POSSIBLE FULL TEST BEFORE INSTALLATION INTO DETECTOR

# SOME EXPERIENCES IN TOPAZ THIN SUPERCONDUCTING SOLENOID

1. INNER (INTERNAL) WINDING TECHNIQUE

   ... SUITABLE IN LARGER COIL

   TOPAZ → ALEPH, DELPHI → G-2

   (~3m$^{\phi}$) (~6m$^{\phi}$) (~14m$^{\phi}$)

2. RELIABLE EPOXY-BONDING

   ...

   $\sigma_{SHEAR} \gtrsim 2\ kgf/mm^2$

   (RESULT OF FULL SIZE (3m × 5m$^L$) TEST COIL)

   ⇒ AXIAL FORCE CAN BE SHEARED IN COIL AND OUTER CYLINDER

3. RELIABLE CURRENT LEADS

   ...

   RRR ≃ 30

   ADDITIONAL MASS
   SOLID STRUCTURE
   EFFICIENT COOLING
   } $\Delta\theta_{(TEMP)} \leqq 100K$

   I = 4000 A

   No · He MASS FLOW (t = 16 MIN)

   ⇒ 10000 A OPERATION CAN BE CONSIDERABLE.

⑨ RELIABILITY OF BONDING STRENGTH OF EPOXY

IN CASE OF TOPAZ

FULL SIZE TEST WINDING

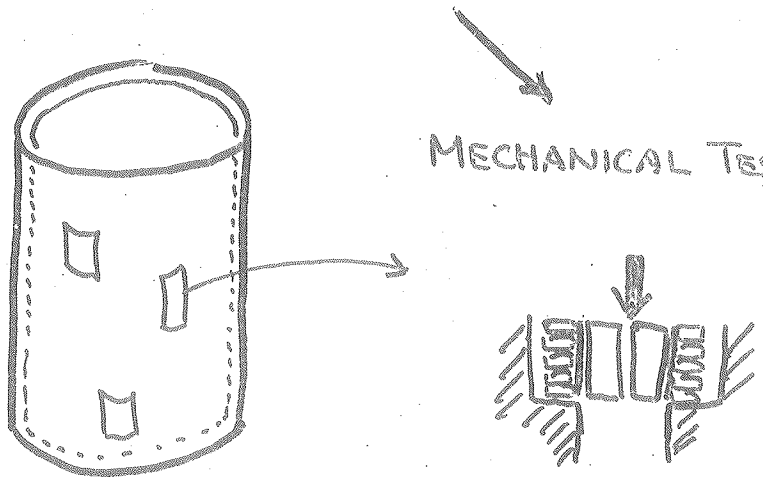


SHARE STRENGTH OF EPOXY RESIN BOUNDARY IN FULL SIZE TEST COIL IS

$\geq$ 2 kgf/mm$^2$ ( $\gtrsim$ 1400 psi )

MOSTLY AS SAME AS SMALL TEST SAMPLES

(NOT REDUCED BY A FACTOR 10 )

Fig.8 Bonding strength between superconductor and aluminum material.

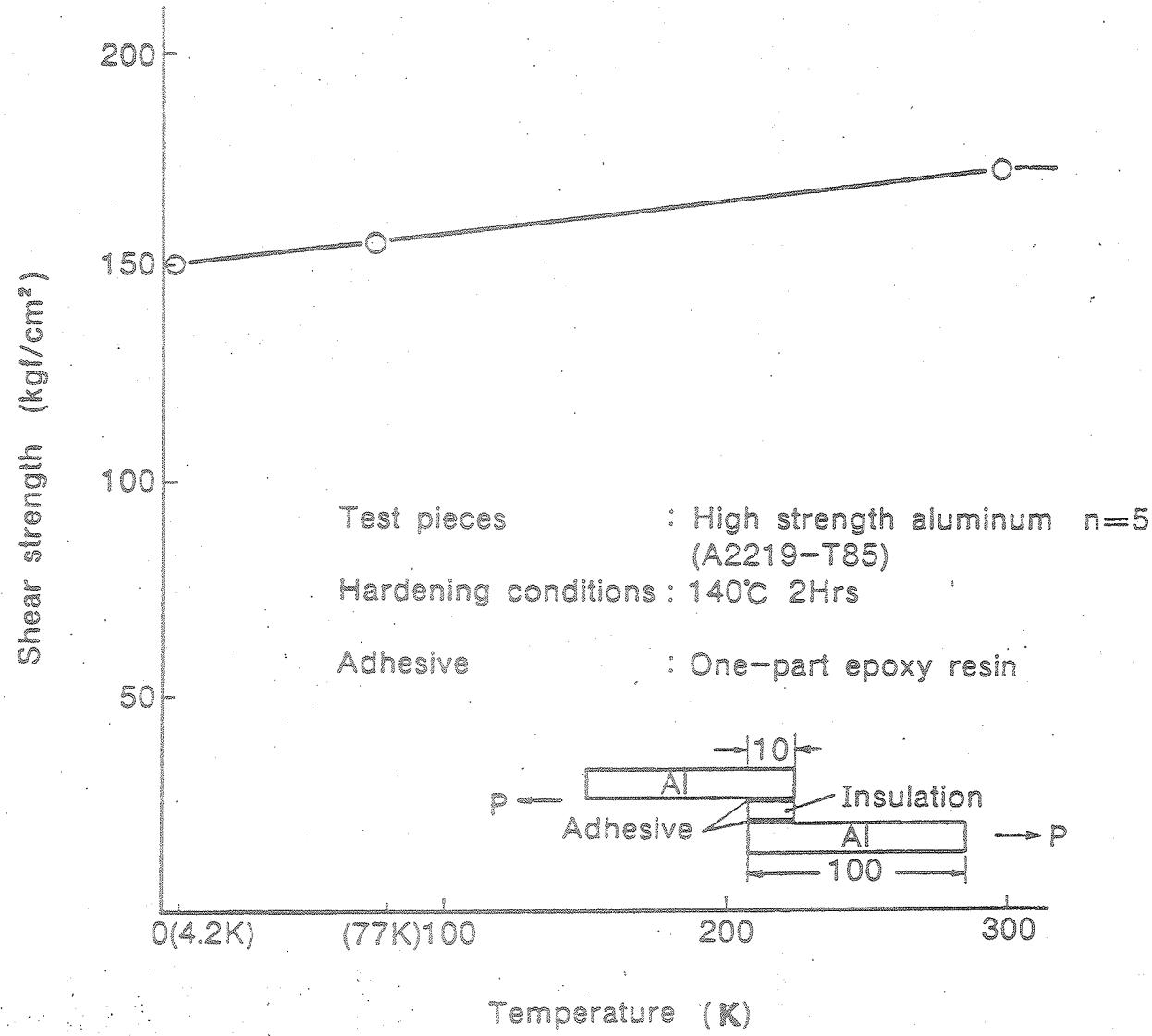


Fig.7 Bonding strength to outer cylinder and ground insulation material.

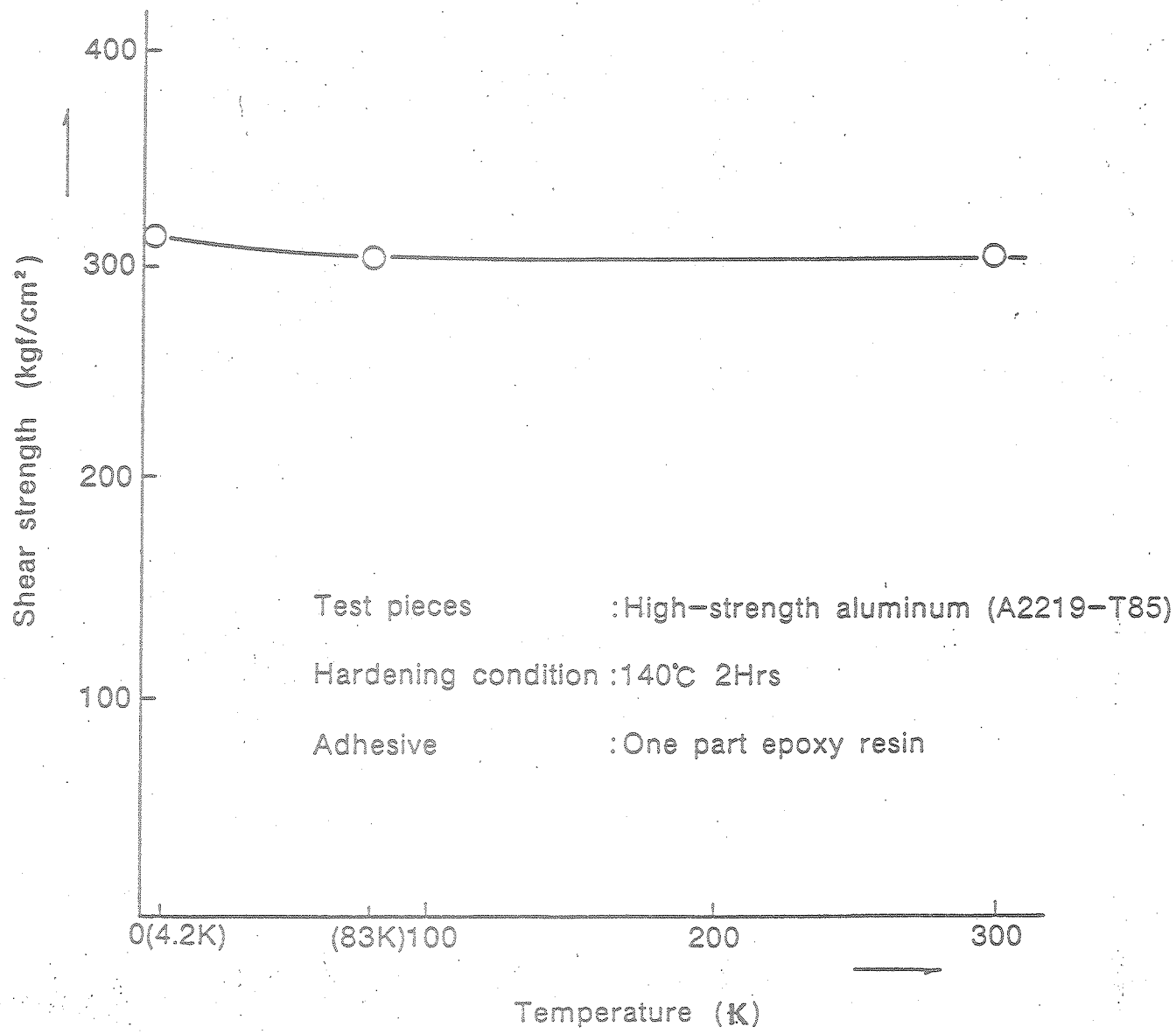


Fig. 9 Relationship between temperature and shear strength of the Adhesive

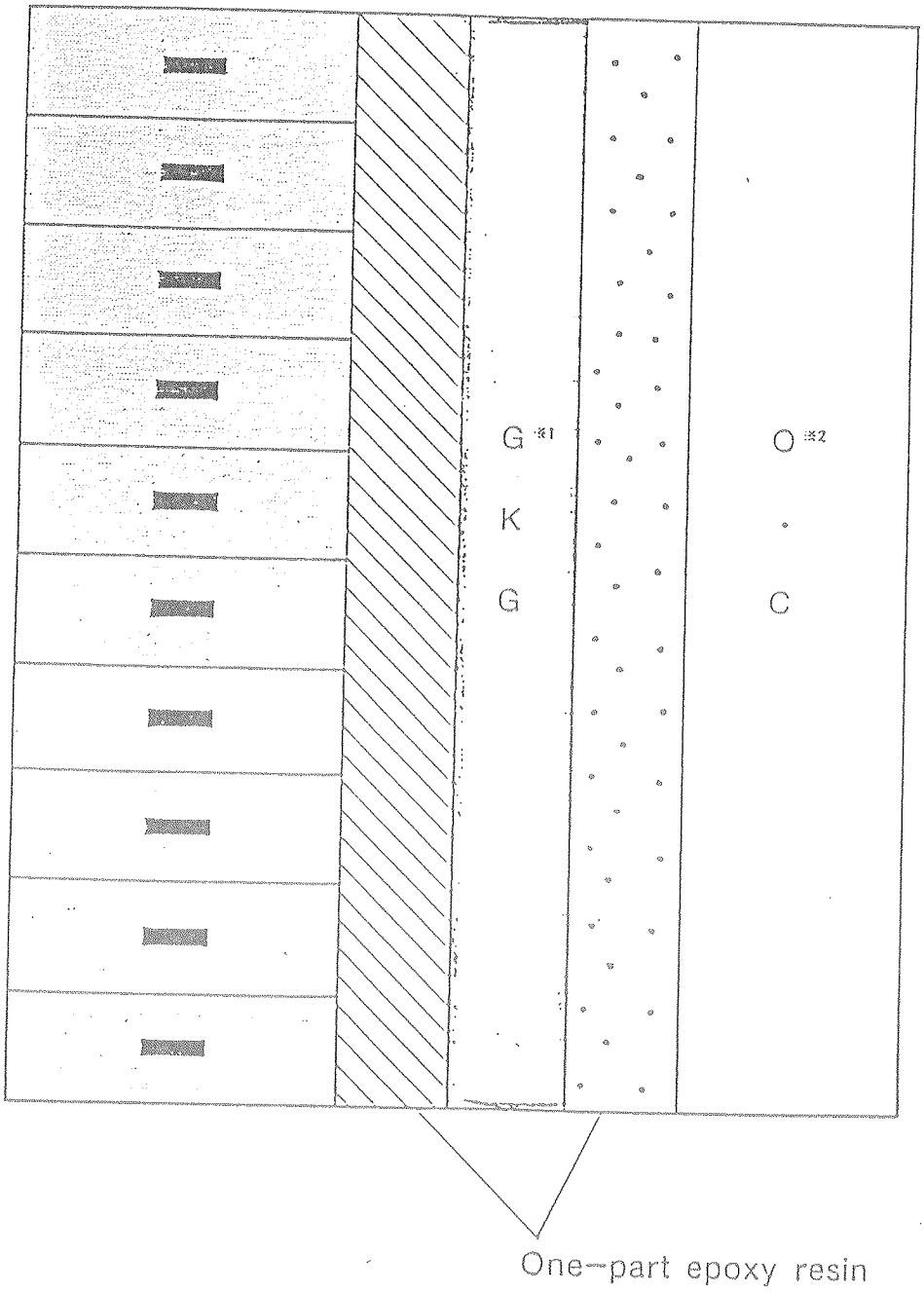


※1 Ground insulating material

※2 Outer cylinder

Fig. 6 Cross section of the TOPAZ coil

# CURRENT LEADS OF THE TOPAZ SOLENOID

WE HAVE DEVELOPED VERY STABLE CURRENT LEAD.
MAIN FEATURES ARE

- LOW RRR Cu ALLOY (Cu·Ag–0.2 %) ··· RRR = 32
- LARGER HEAT CAPACITY WITH MANY FINS

Characterictics of the current leads for the TOPAZ solenoid.

| | | | |
|---|---|---|---|
| Parameters | | | |
| I | 5000 A | | |
| Materical | Cu·Ag(0.2%) | | |
| RRR | 32 | | |
| (I·l)/A | 1.4E5 A cm | | |
| Outer dimension | O.D. 2.6cmφ x 50 cm | | |
| Performance(@ T–top=260 K) | | | |
| Current | 0 A | 3000 A | 5000 A |
| Voltage drop | 0 | 23 mV | 50 mV |
| Δp | 2 kPa | 3 kPa | 5 kPa |
| LHe per pair | 14 l/h | 17 l/h | 21 l/h |

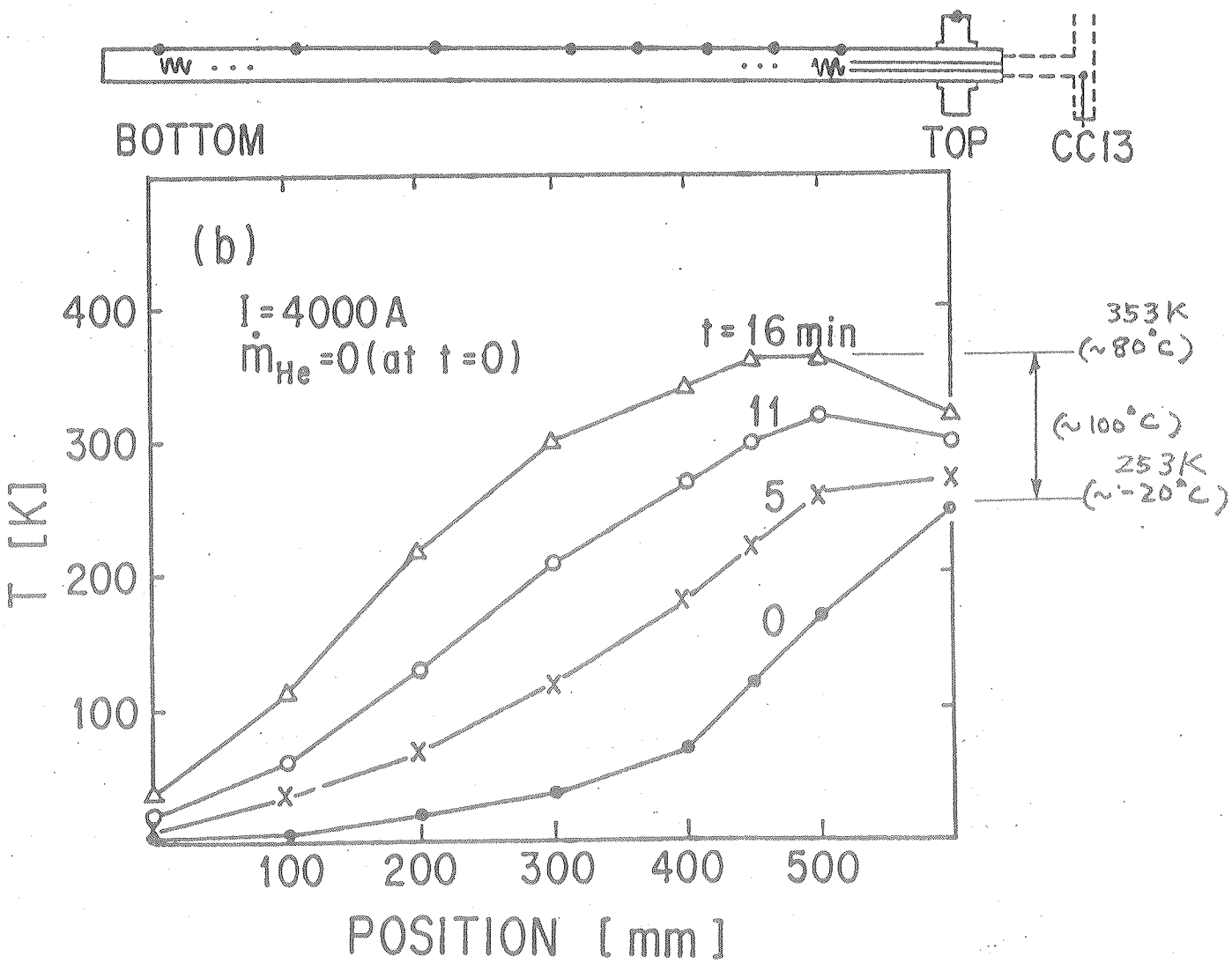


MASS FLOW STOP

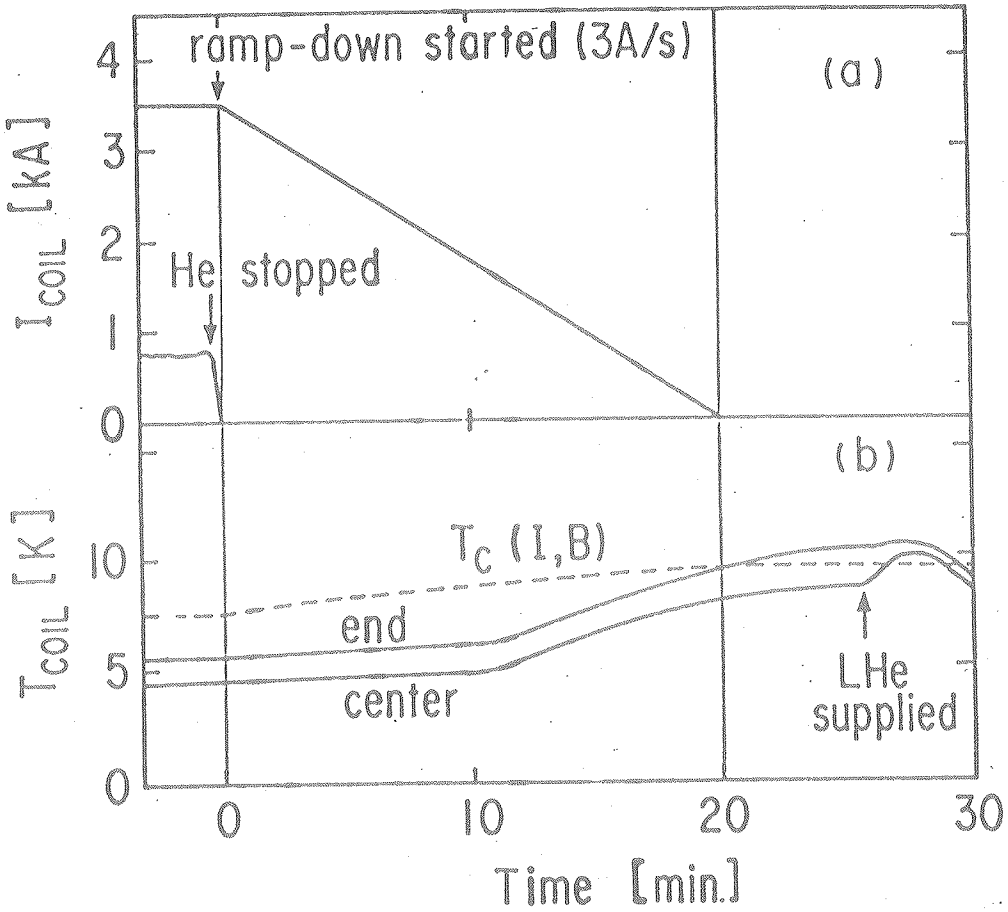


Fig. 3

He MASS FLOW STOP → SLOW RAMP-DOWN

# 2. DEVELOPMENT OF THIN SOLENOID FOR BALLOON-BORN EXPERIMENTS

## 2-1. REQUIREMENTS ON THE MAGNET

TRANCEPERENCY : $\lesssim 0.05 \lambda_a$ (ABSORPTION LENGTH)

$\lesssim 0.2\ X_0$ (RADIATION LENGTH)

$\lesssim 4 \sim 5\ g/cm^2 : Al$

(Eq. Air ON TOP)

LIGHT WEIGHT : $\lesssim 350$ kg ($\sim 1/3 \times W_{P.L}$)

LARGE SOLID ANGLE : $\gtrsim 0.5\ m^2 \cdot Sr$ ($1m^{\phi} \times 1.3m^{\ell}$)

($\gtrsim 10 \times \Omega$ present facility)

OPERATIONAL PERIOD : $\gtrsim 5$ days

(in persistent mode w/o LHe refilling)

# NEW DESIGN CONCEPT FOR THIN SOLENOIDS

1. To Minimize Thickness ($X_0$) and Mass (M)

$$\frac{E \text{ (STORED ENERGY)}}{M \text{ (ACTIVE COLD MASS)}} \Rightarrow \text{MAXIMIZE}$$

When E is dumped into COIL MASS, M

$$E = (H_1 - H_0) \cdot M$$

$$E/M = H_1 - H_0 \doteq H_1$$

H : COIL ENTHALPY

$$(= \int_0^1 c_p \, dT)$$

$$E/M = (H(8_K) - H(4_K)) \doteq 10 \text{ kJ/kg}$$

$$E/M = 10 \text{ kJ/kg} \Rightarrow T_1 \simeq 80 \text{ K}.$$

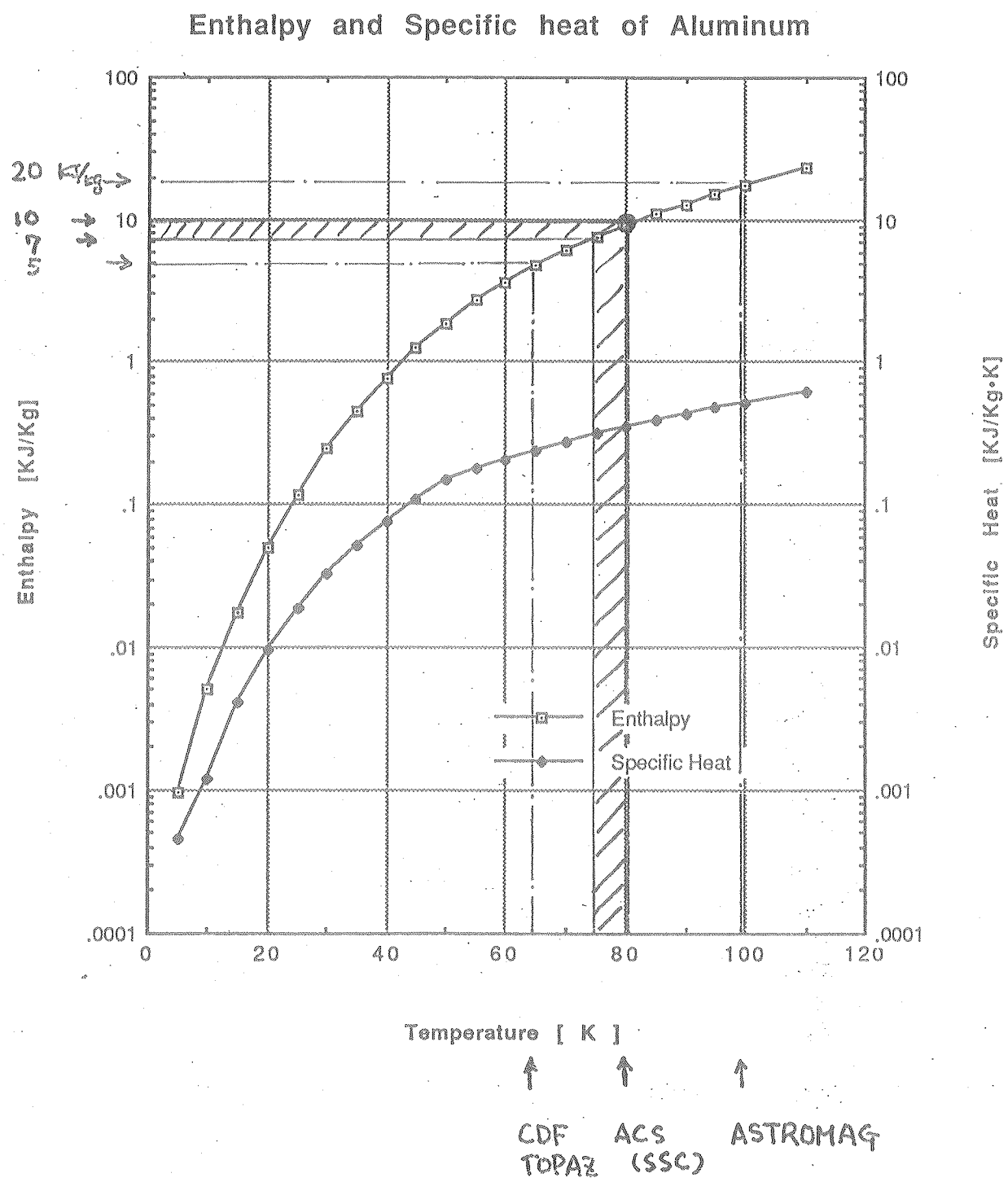
Enthalpy and Specific heat of Aluminum
Enthalpy [KJ/Kg]
Specific Heat [KJ/Kg•K]
Temperature [ K ]
Enthalpy
Specific Heat
100
10
1
.1
.01
.001
.0001
0
20
40
60
80
100
120
20 KJ/kg
~7.5
CDF
TOPAZ
ACS
(SSC)
ASTROMAG

## 2. UNIFORM ENERGY DUMP

QUICK QUENCH PROPAGATION

⇓

UNIFORM ENERGY DUMP

⇓

MINIMIZED TEMPARATURE RIZE AND

$\Delta T$ IN COIL

QUENCH PROPAGATION

$$v_{Q\ell} = \frac{J}{\gamma C}\left\{\frac{\rho k}{T_s - T_0}\right\} = \frac{J}{\alpha C}\left\{\frac{\overbrace{L_0 T_s}^{\text{constant}}}{T_s - T_0}\right\}^{1/2}$$

$L_0$ : Lorentz number (constant)

$$v_{Qz} = \varepsilon \times v_{q\ell} = \left(\frac{k_z}{k_\ell}\right)^{1/2} \times v_{q\ell}$$

It is important to enhance $k_z$.

⇓

Pure Al STRIP on COIL SURFACE

much IMPROVE $k_z$

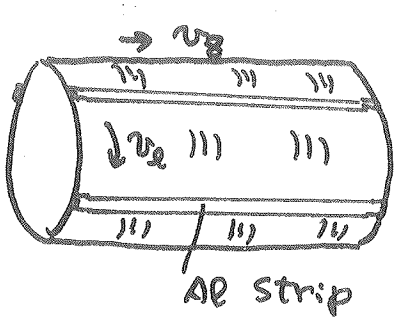

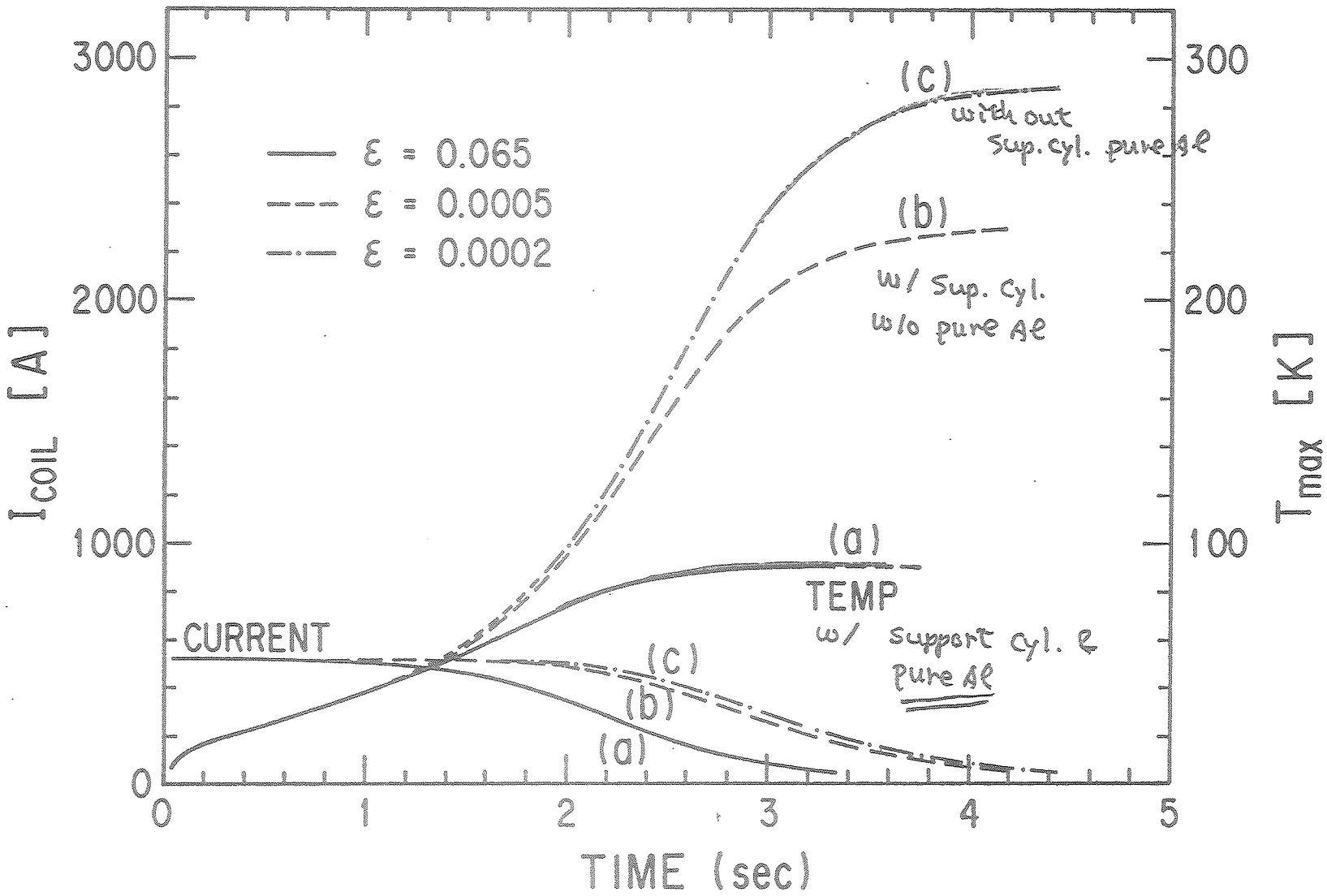


MAXIMUM TEMP. AFTER QUENCH

TABLE 1. Main parameters of the thin solenoid for balloon experiments in particle astrophysics.

| | |
|---|---|
| Dimensions: | |
| Coil diameter | 1.0 m |
| length | 1.3 m |
| nom. thick. | 5.4 mm |
| ryostat O.D. | 1.2 m |
| length | 2.0 m |
| Useful aperture | 0.85 m |
| length | 1.0 m |
| Central field | 1.2 T |
| Bmax in coil | 2.2 T |
| Current | 520 A |
| Turns | 3368 |
| Inductance | 6 H |
| Stored energy | 815 kJ |
| Wall thickness | 0.21 Xo |
| E/Mef | 7 kJ/kg |
| Total weight(+ LHe) | 400 kg |
| Acc force | 10 G |
| Conductor: | |
| Superconductor | Nb.Ti/Cu |
| Stabilizer | Pure Al |
| RRR in pure AL | >1500 |
| NbTi:Cu:AL | 1:1:7.3 |
| Outer size | 1.2x1.8mm |
| Ic (@3.8 T, 4.2 K) | 930 A |
| Jc | 3700A/mm2 |
| Insulation | Kevlar |

## 2. DESIGN & FABRICATION

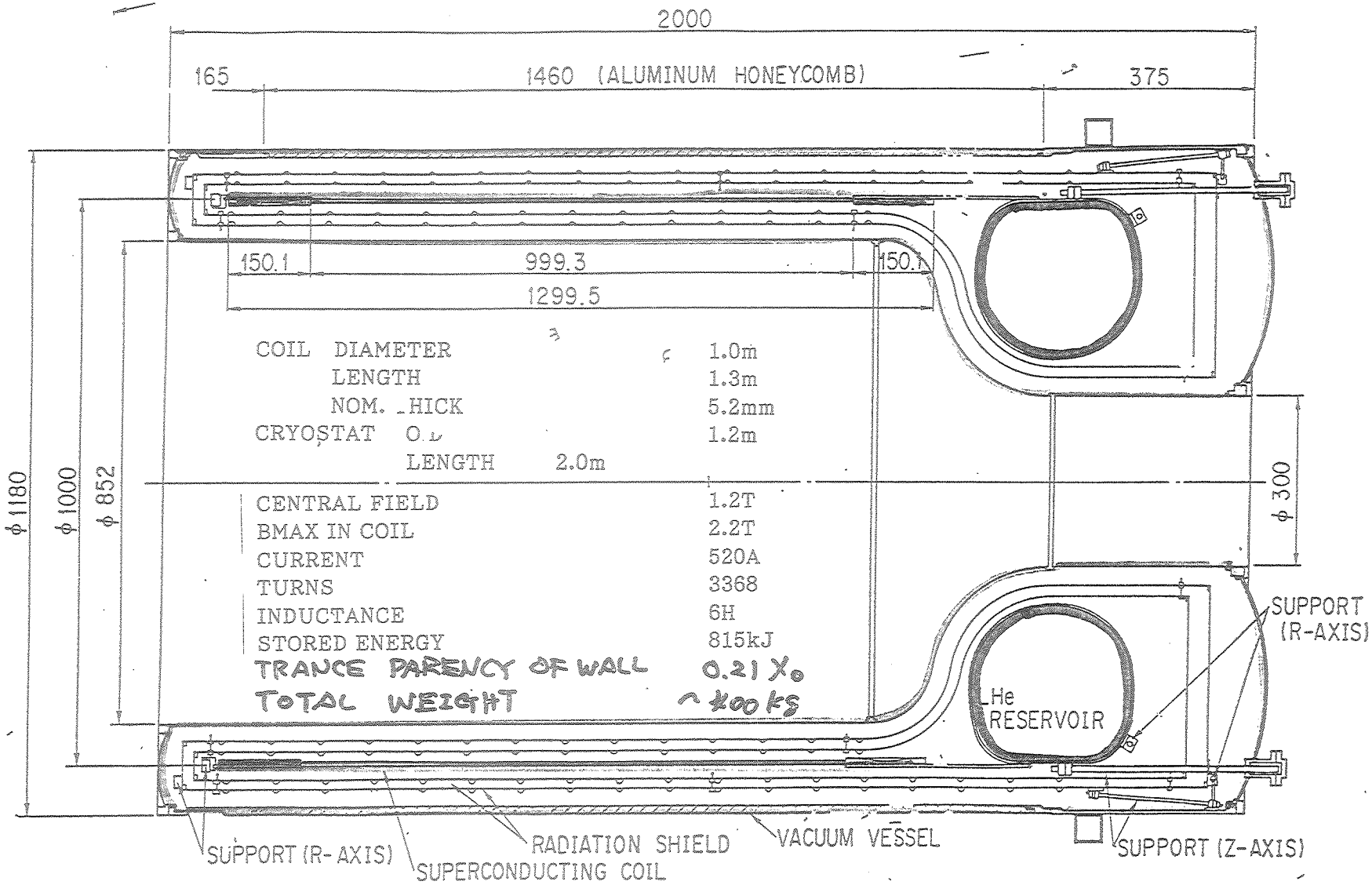

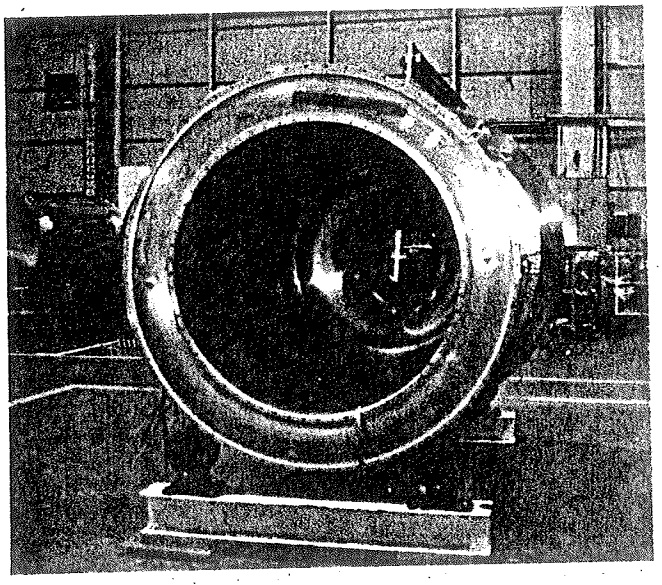

FIGURE 1. An out look of the thin solenoid.

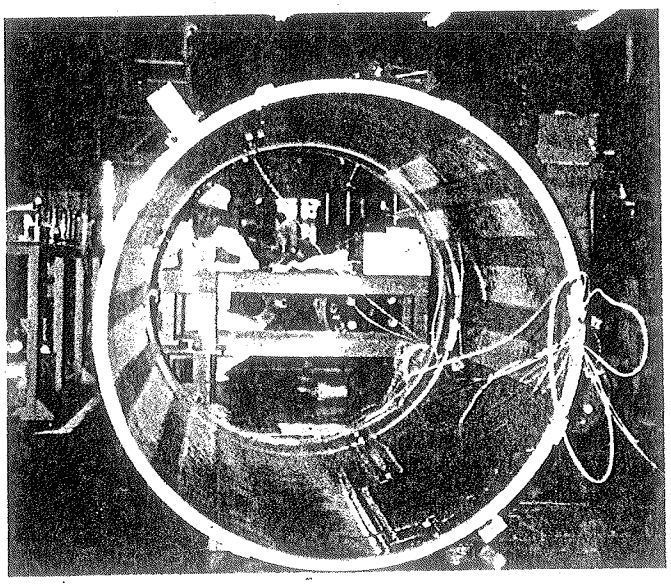

FIGURE 3. A View of the coil fabricated.

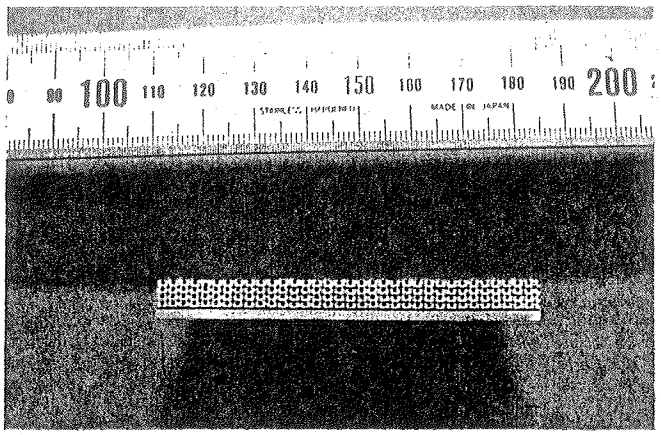


FIGURE 4. Cross section of the sample coil.

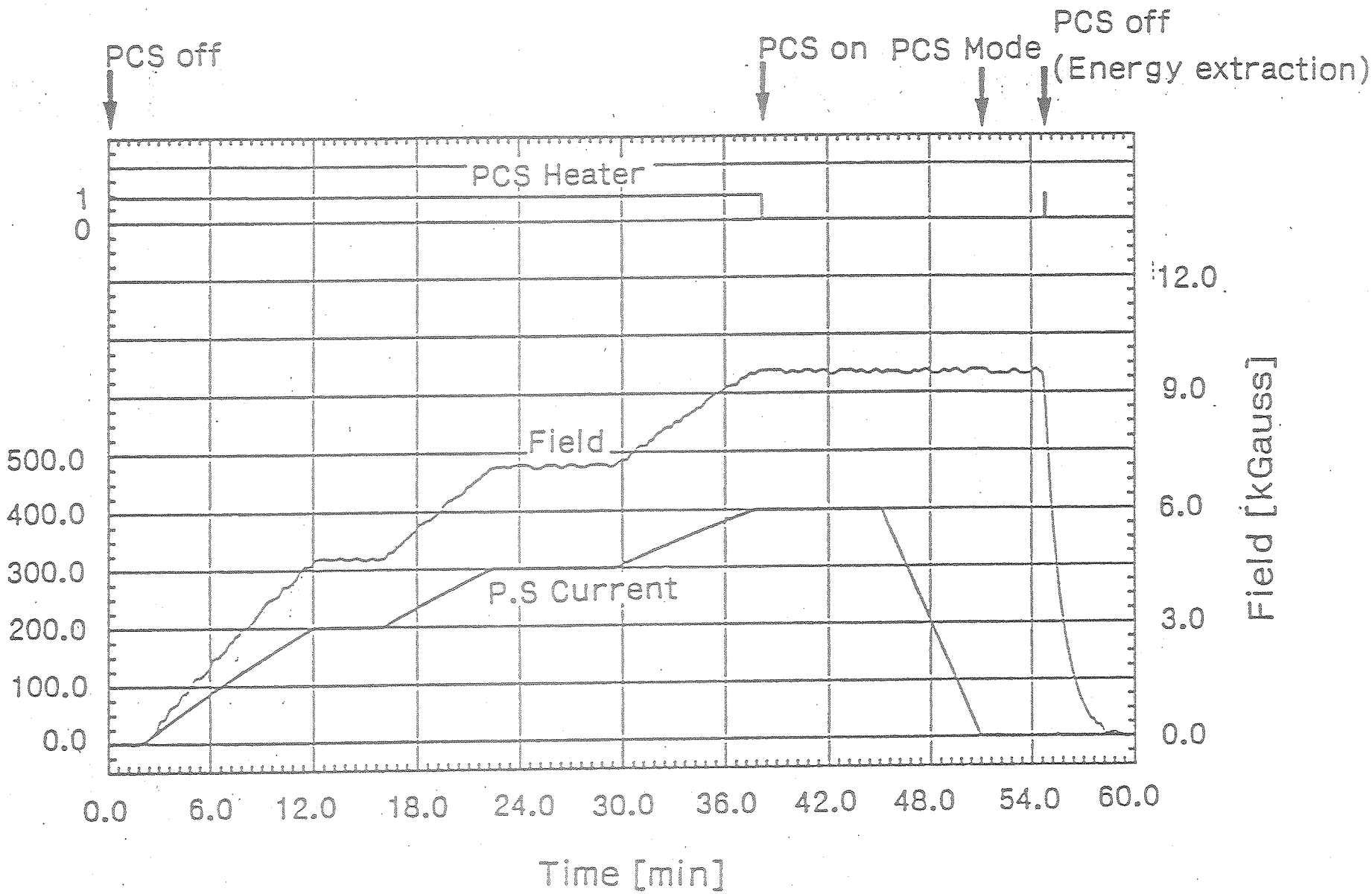


FIGURE 6. Trend for a typical excitation sequence in the persisitent current operation at 400 A.

# DESIGN STUDY OF ACS SOLENOID

- E/M ≃ 10 KJ/kg WITH FAST QUENCH PROPAGATION SEEMS TO BE AN APROPRIATE DESIGN PARAMETER

  5 KJ/kg ... VERIFIED

  7 KJ/kg ... BEING EVALUATED

  10

  20 KJ/kg ... BEING (TO BE) STUDIED

- I ≈ 10000 A IS CONSIDARABLE
  - CONDUCTOR (I ≈ 10,000) FEASIBLE
  - HIGHER CURRENT IS GENERALLY EXPECTED IN THIN SOLENOID,
  - COOLING POWER (REFR. CAP) IS NOT INFINITE.
  - EMERGENCY ($M_{He}$ = 0) MODE MUST BE INCLUDED IN DESIGN

- AL-HONEYCOMB VAC VESSEL (OUTER) IS FEASIBLE

  0.5 mΦ ... VERIFIED UP TO 5 atm (EXT)

  1.2 mΦ ... VERIFIED UP TO 1 atm

  ~4 mΦ ... 1.2 mΦ × 3~4.

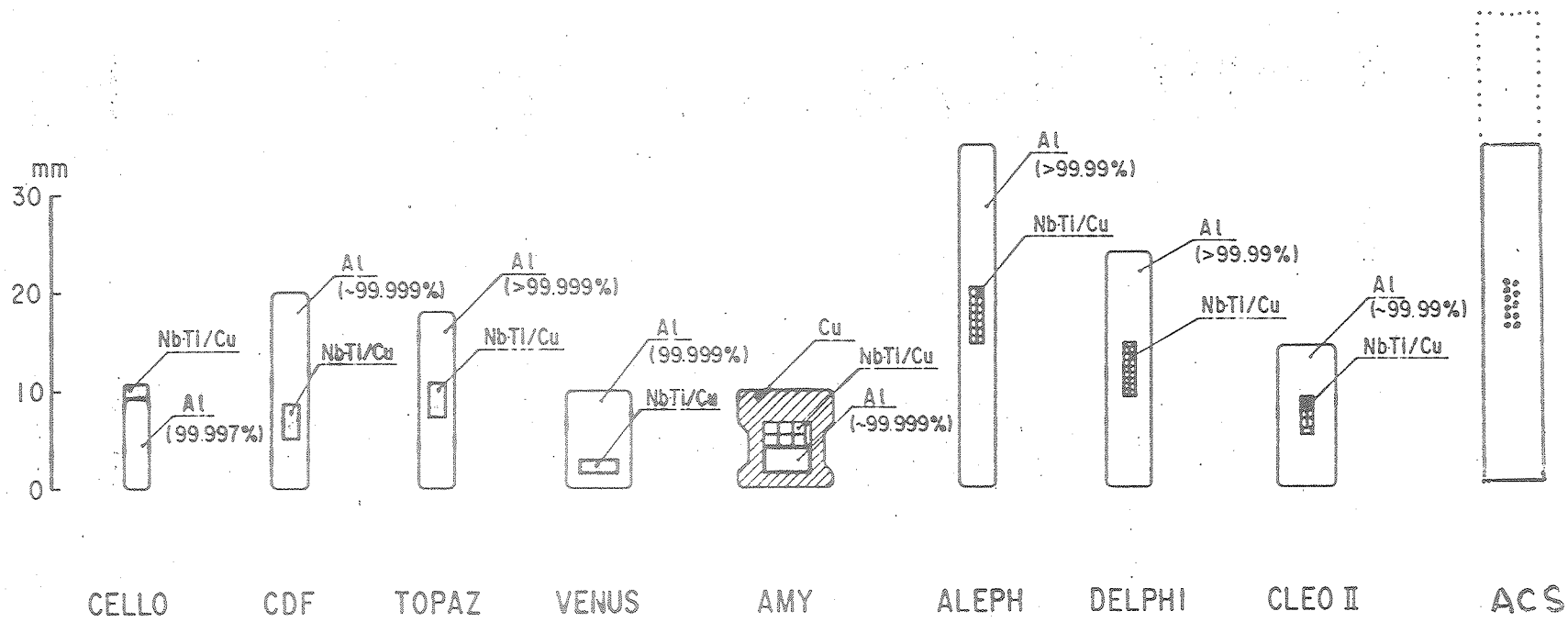
mm
30
20
10
0
Nb-Ti/Cu
Al
(99.997%)
Al
(~99.999%)
Nb-Ti/Cu
Al
(>99.999%)
Nb-Ti/Cu
Al
(99.999%)
Nb-Ti/Cu
Cu
Nb-Ti/Cu
Al
(~99.999%)
Al
(>99.99%)
Nb-Ti/Cu
Al
(>99.99%)
Nb-Ti/Cu
Al
(~99.99%)
Nb-Ti/Cu
CELLO
CDF
TOPAZ
VENUS
AMY
ALEPH
DELPHI
CLEO II
ACS

# Quench Simulation

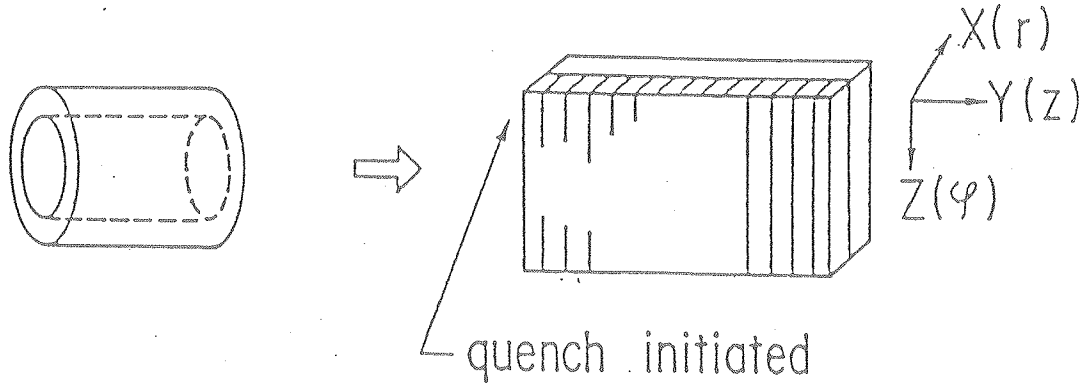


thermal conductivities $\alpha, \epsilon$

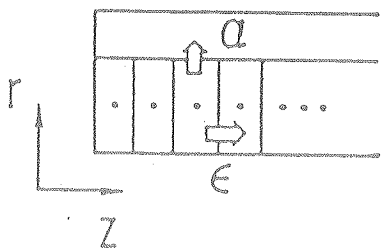


ε is enhanced by axial aluminum stri

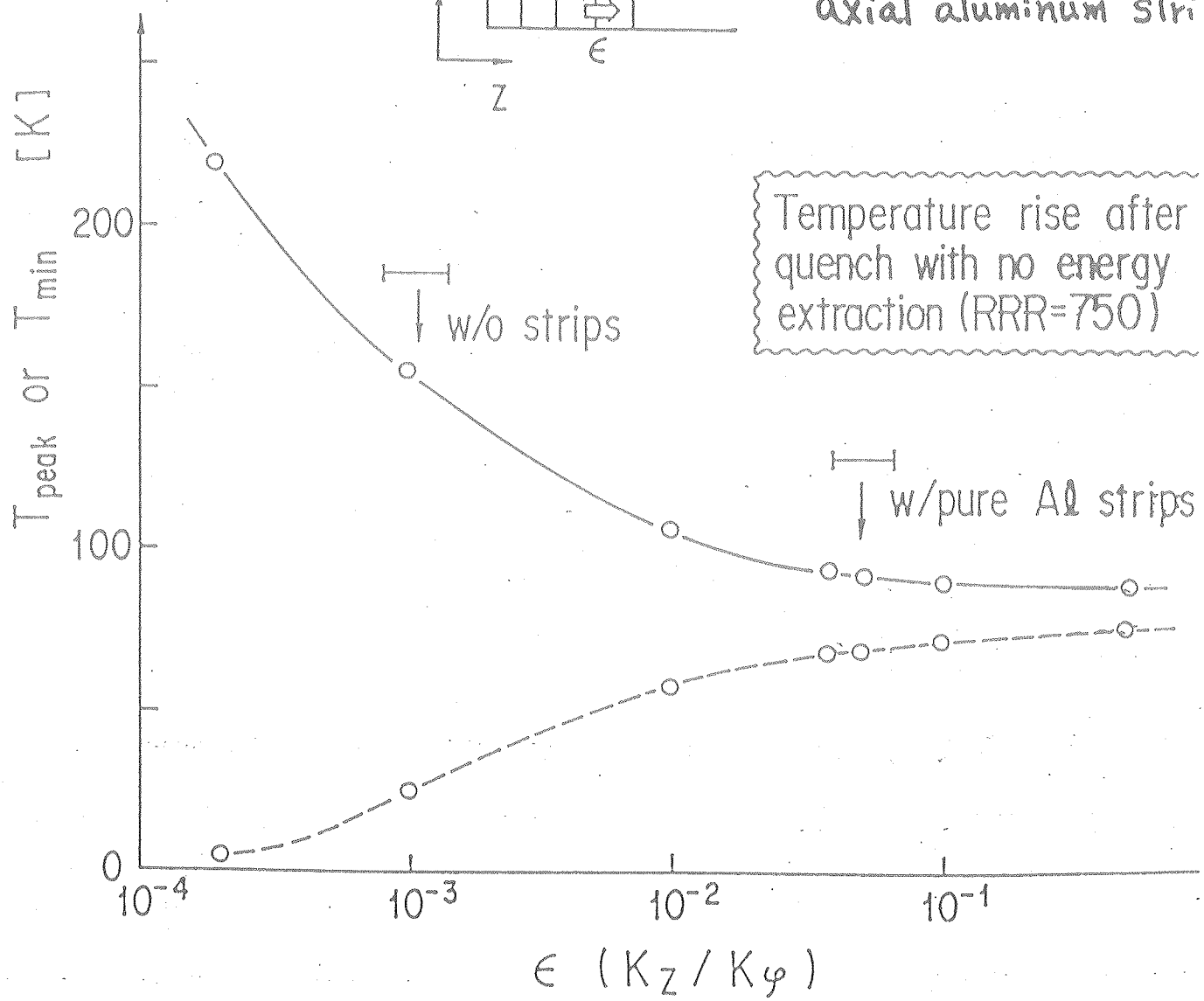


Temperature rise after quench with no energy extraction (RRR=750)

# CONCLUSIONS

- ACS THIN SOLENOID IS FEASIBLE WITH PARAMETERS OF
  - 3.6 m$^{\phi}$ x 9 m (COIL)
  - $B_c$ = 2 Tesla
  - $\lesssim 1 X_0$
  - $T_{PEAK} \lesssim 100K$ after QUENCH
  - $\sigma_{pureAl} \lesssim 4$ kgf/mm$^2$
  - $\sigma_{EPOXY.BOND} \lesssim 2$ kgf/mm$^2$
  - $I_{op} \simeq 10{,}000$ A
- BECAUSE OF FOLLOWING DESIGN CONCEPT AND R&D EFFORTS (& EXPERIENCE)
  - E/M $\Rightarrow$ 10 KJ/kg
  - FAST QUENCH PROPAGATION & HOM. ENERGY DUMP BY USING PURE Al STRIP
  - RELIABLE EPOXY-BONDING TECHNIQUE
  - HONEYCOMB-LEAK-TIGHT VACUUM VESSEL
  - RELIABLE HIGH CURRENT, CURRENT-LEADS TECHNIQUE
  - POSSIBLE HIGHER STRENGTH PURE Al

PRESENTATION BY JOHN PURCELL (Adv. Cryogenics)

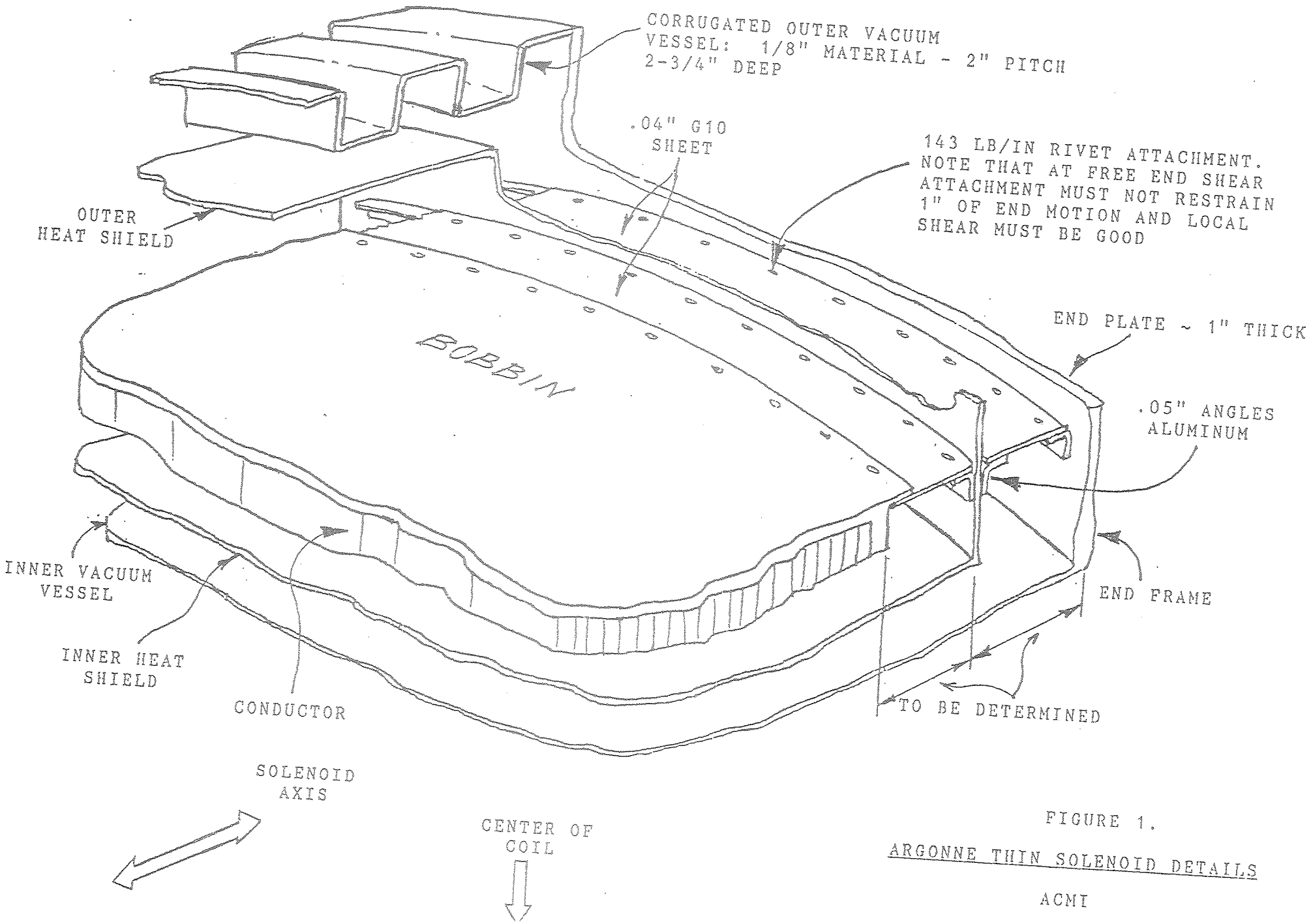


FIGURE 1.

ARGONNE THIN SOLENOID DETAILS

ACMI

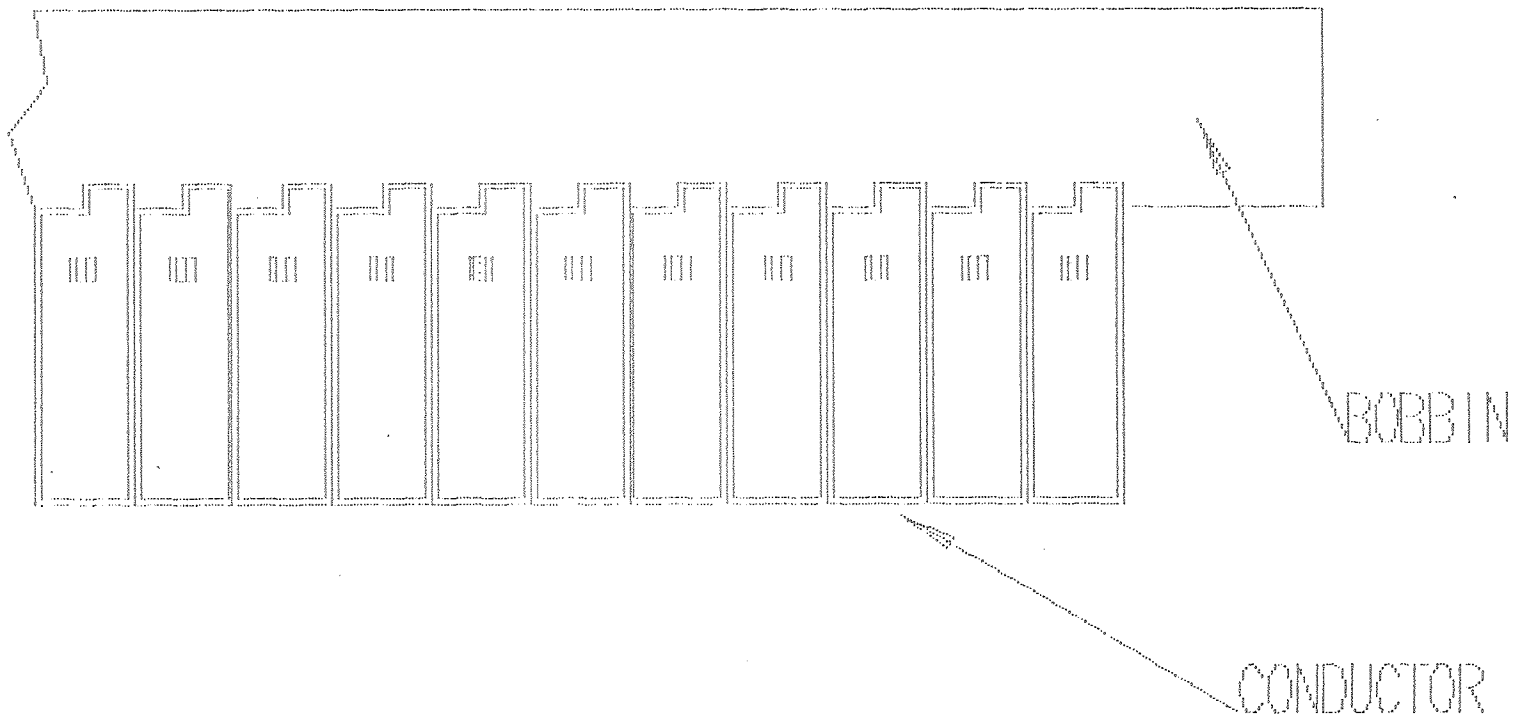


FIGURE 2

CONDUCTOR FITTED INTO
SPIRAL GROOVES IN THE BOBBIN

# SUMMARY REPORT OF MAGNET WORKING GROUP

Nov. 18, 1989
ANL MEETING

# REPORT OF MAGNET WORKING GROUP

REPORTER BY T. KONDO

## GOAL #1 : BEGIN TO ORGANIZE WORKING GROUP

YES, WE HAVE FORMED MAGNET WORKING GROUP.

ANL : T. FIELD, S.H. KIM

FERMILAB : R. KEPHART*, R. FAST, J. GRIMSON, J. KREBS, R. WANDS

LBL : P. EBERHARD, R. KADEL

TSUKUBA UNIV. : S. MORI

KEK : T. KONDO**, A. YAMAMOTO

ADVANCED CRYOGENICS : J. PURCELL

* CONTACT PERSON FOR LONG COIL.

** CONTACT PERSON FOR AIR CORE COIL.

## GOAL #2 : SUGGEST INITIAL PARAMETERS

YES, FOR THE SAKE OF PHYSICS EVALUATIONS AND COST ESTIMATES, WE DESIGN SOLENOIDS OF

TYPE L : LONG SOLENOID WITH IRON FLUX RETURN

TYPE S : AIR CORE SOLENOID

WITH TWO DIFFERENT RADII,

| PARAMETERS | SMALL | LARGE |
|---|---|---|
| INNER RADIUS $R_{IN}$ | 170 CM | 200 CM |
| OUTER RADIUS $R_{OUT}$ | 200 CM | 235 CM |
| TRACKING VOLUME $Z_{TR}$ | ±400 CM | ±450 CM |
| CENTRAL FIELD $B_c$ | 2.0 T | 1.7 T |
| RADIATION THICKNESS ( $\theta = 90°$ ) | 1.0 ~ 1.2 $X_0$ | 1.0 ~ 1.2 $X_0$ |

# TYPE L : LONG SOLENOID

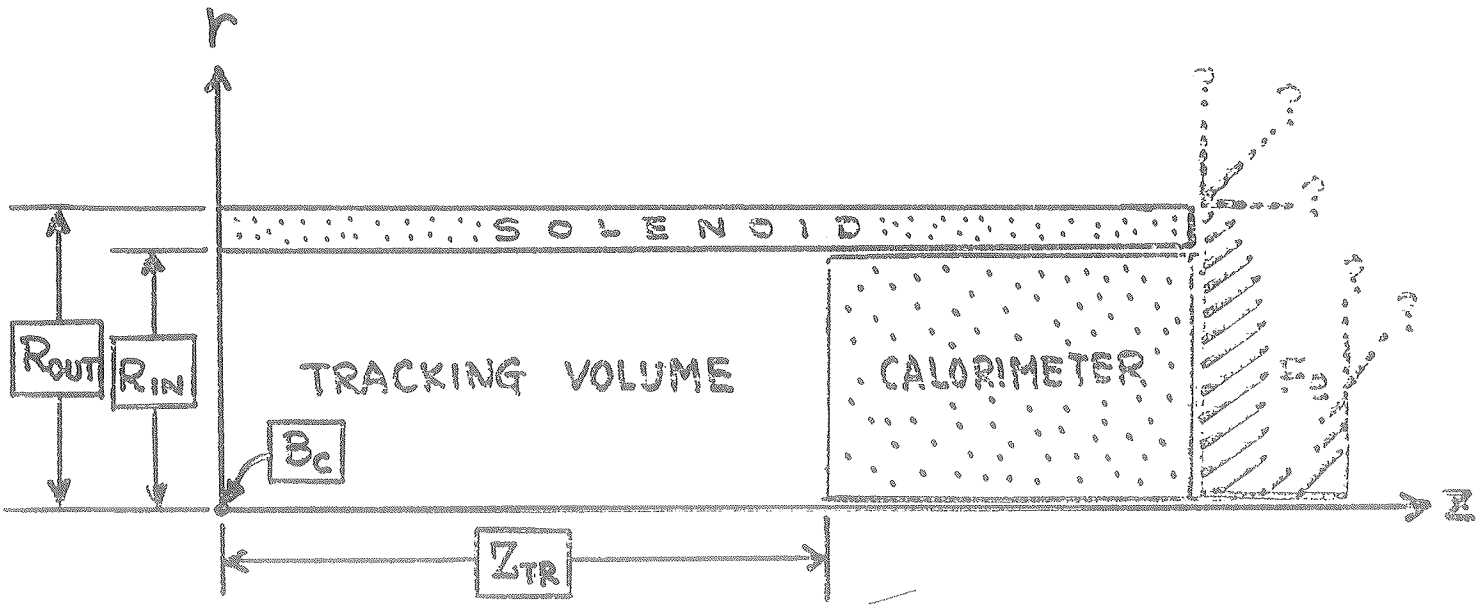


COIL LENGTH $\approx 2 \times ( Z_{TR} +$ DEPTH OF FORWARD CALORIMETR $)$

PLEASE GIVE US!

CALORIMETER W.G.

SHAPE & THICKNESS OF IRON FLUX RETURN ARE NOT SPECIFIED AT THIS STAGE, BUT PROBABLY

IRON THICKNESS $\gtrsim$ 1 M

# TYPE S : AIR CORE SOLENOID

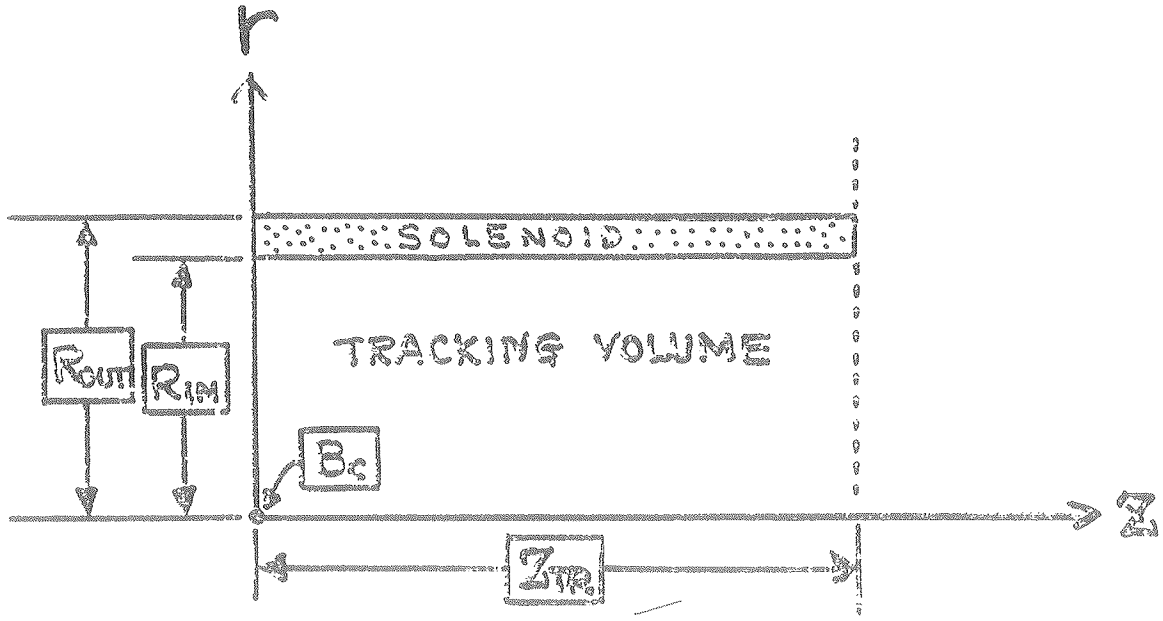


SOLENOID LENGTH = $2 \times Z_{TR}$

NOTE THAT

1. FOR THE TIME BEING, DESIGN OF THE SOLENOID FOR FTD-II (INSTRUMENTED FLUX RETURN) IS SET ASIDE IN ORDER NOT TO INCREASE COMPLEXITY FOR PHYSICS EVALUATION, BUT IT REMAINS AS A VIABLE OPTION.

2. RADIUS, LENGTH AND FIELD STRENGTH OF THE PROPOSED MODEL SOLENOIDS ARE JUST FOR REFERENCE DESIGNS. DO NOT TAKE THESE VALUES AS FIXED! NOT-LARGE PERTURBATIONS ON THESE VALUES ARE OBVIOUSLY POSSIBLE.*

   * SCALING LAWS WILL BE PROVIDED LATER.

3. WE WILL SOON PROVIDE

   FIELD MAP

   END STRUCTURE

   INTERNAL MASS DISTRIBUTION.

BUT FOR THE TIME BEING, USE

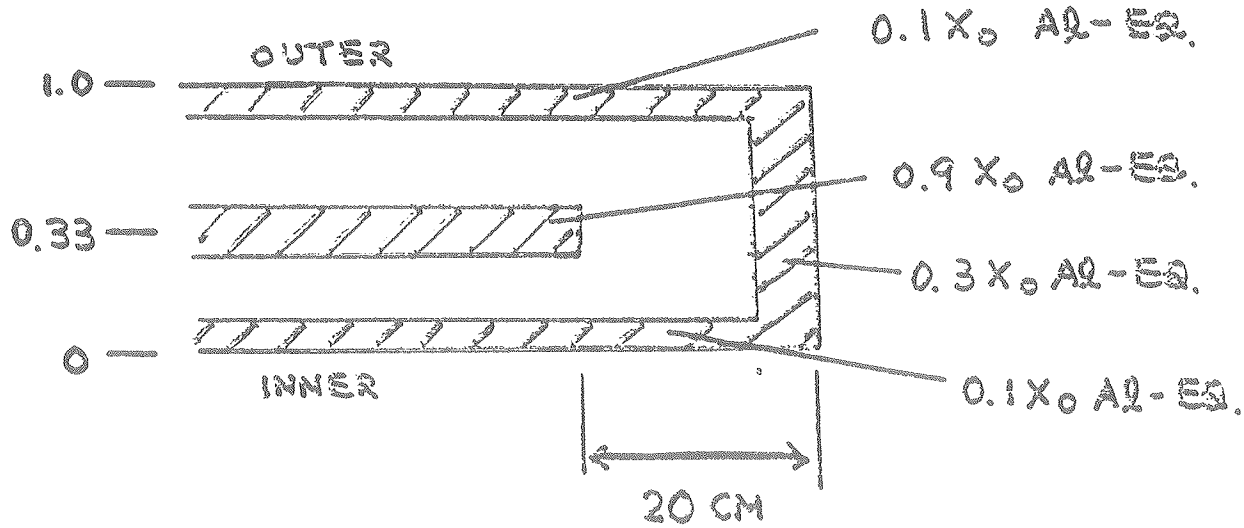


4. UTILITY CHIMNEY AND COIL SUPPORT CAN BE NEGLECTED FOR INITIAL PHYSICS SIMULATIONS, SINCE

- THEY ARE LIGHT
- THEY DON'T OCCUPY LARGE SPACE.

5. TWO TYPES × TWO RADII → FOUR DESIGNS!

GOAL #3 : JUMP START PHYSICS AND SIMULATION.

GO AHEAD. WE WILL HELP YOU.

WG CHARGE #1 : REVIEW REQUIREMENTS AND ONGOING R&D

T. KONDO : ACS DESIGN
R. FAST : SOLENOID DESIGN COMPARISON
R. WANDS : SOLENOID DESIGN COMPARISON
S. MORI : HCD MAGNET DESIGN
A. YAMAMOTO : ENGINEERING ASPECTS OF ACS
R. KADEL : COIL PLACEMENT (JOINT MEETING W/ SIMULATION
J. PURCELL : DESIGN CONSIDERATIONS
T. FIELD : FORWARD AIR-CORE TOROID
P. EBERHARD : DETECTORS IN A COIL

WG CHARGE #2 : IDENTIFY TASKS TO BE DONE FOR EOI BY EACH WORKING GROUP

WE WILL PROVIDE A "JOINT" DESIGN REPORT (SIMILAR TO THE YELLOW CDF MAGNET REPORT) FOR THE BASIS OF TECHNICAL EVALUATIONS.

THE DESIGN REPORT WILL INCLUDE

- ENGINEERING DESIGN
- COST ESTIMATE
- CONSTRUCTION TIME ESTIMATE
- TEST PROCEDURE
- CRYOGENIC DESIGN
- POWER SUPPLY & ENERY DUMP SYSTEM
- TRANSPORTATION METHOD
- ASSEMBLY PROCEDURE INTO THE DETECTOR
- OPERATIONAL ASPECTS
  - COOLDOWN TIME $\lesssim$ 2 WEEKS
  - EXCITATION TIME $\lesssim$ 1 HR
  - QUENCH RECOVERY TIME
- SUPPORT OF TRACKING SYSTEM*
- THERMAL CONTROL OF TRACKING VOLUME**
- RESOURCES REQUIRED AT SSCL
  - WATER, He, $LN_2$, CRANE, SPACE, ....
- NECESSARY R&D LIST
- DATA SUMMARY OF RELEVANT MATERIALS
- SCALING LAWS

* TRACKING SYSTEM IS ASSUMED TO BE SUPPORTE FROM THE ENDS.
(WE DON'T SUPPORT TR SYSTEM)

** DO WE NEED HEATERS?

WG CHARGE #3 : DISCUSS PROCESS OF EVENTUALLY CHOOSING TECHNOLOGY FOR EACH SUBSYSTEM

- ALL THE MAGNETS CAN BE BUILT. IT IS A MATTER OF ENGINEERING JOB. (BY J. PURCELL)

- WE WILL PROVIDE DESIGNS OF TWO TYPES (AT LEAST)

  TYPE L : LONG SOLENOID
  TYPE S : AIR CORE SOLENOID

  WITH ENGINEERING INPUTS.

- EXPECTER PHYSICS CAPABILITY AND OVERALL DETECTOR PERFORMANCE WILL BE BASIS OF SELECTION OF MAGNET TYPE AND PARAMETERS.

WG CHARGE #4 : OUTLINE A PRESENTATION FOR DECEMBER COLLABORATION MEETING

PRELIMINARY DESIGNS WILL BE PRESENTED.

WG CHARGE #5 : REVIEW PROPOSED PARAMETER LIST AND SUGGEST VALUE

- SUGGEST TWO TYPES AND TWO SETS OF PARAMETERS FOR REFERENCE DESIGN.
- WE NEED FEEDBACKS FROM OTHER WORKING GROUPS.
-

WG CHARGE #6 : CHOOSE REPRESENTATION FOR PARAMETERS COMMITTEE MEETING LATER.

R. KEPHART (FERMILAB)
T. KONDO (KEK)

QUESTIONS : · DESIGN OF MUON TOROIDS IS THE CHARGE OF THE MAGNET W.G. ?

· HOW ABOUT LARGE SOLENOID ?

— END —

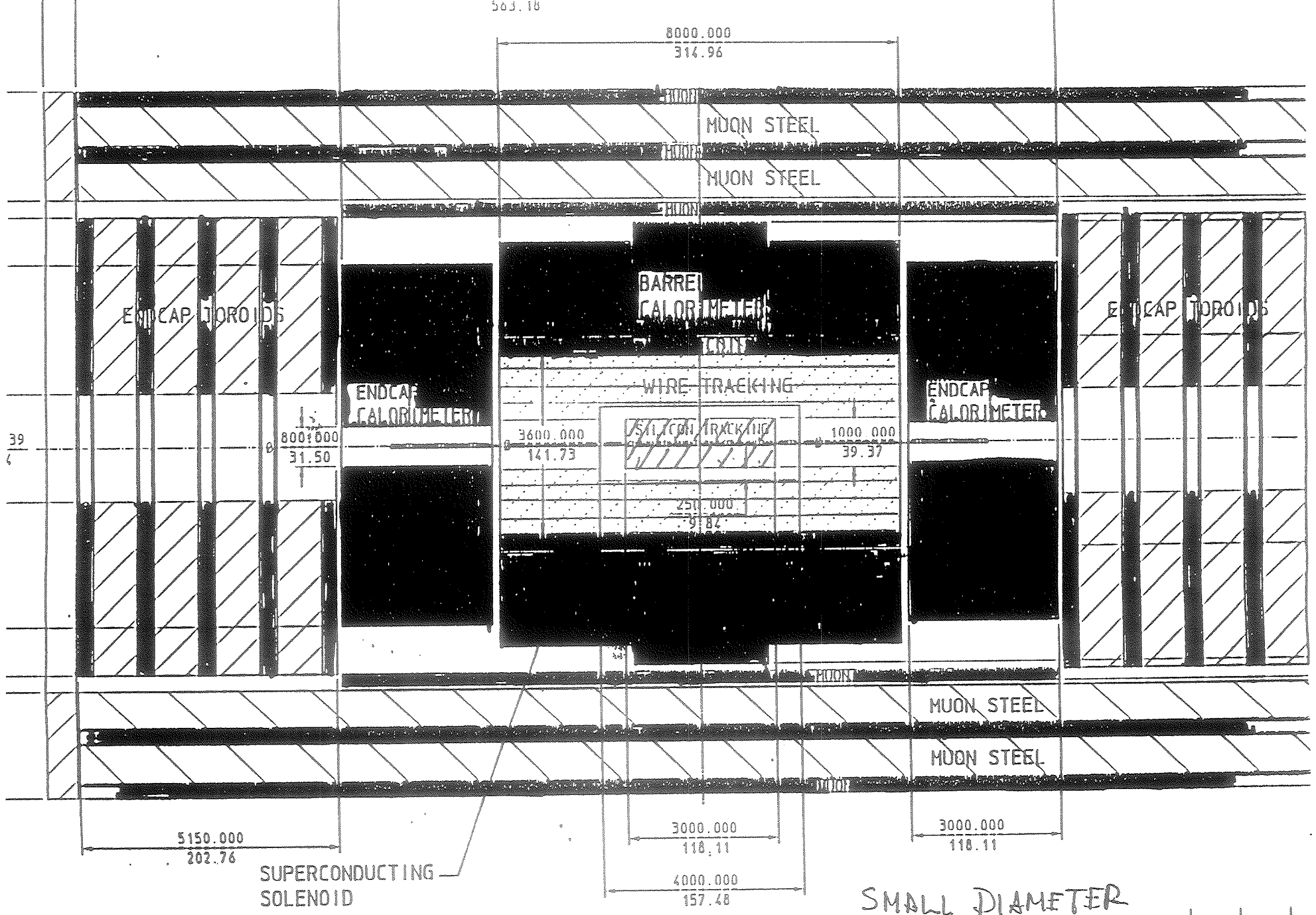


SMALL DIAMETER SHORT COIL

0 1 2

SHORT CO

TES: 1. ALL DIMENSIONS ARE IN MM OVER INCHES.

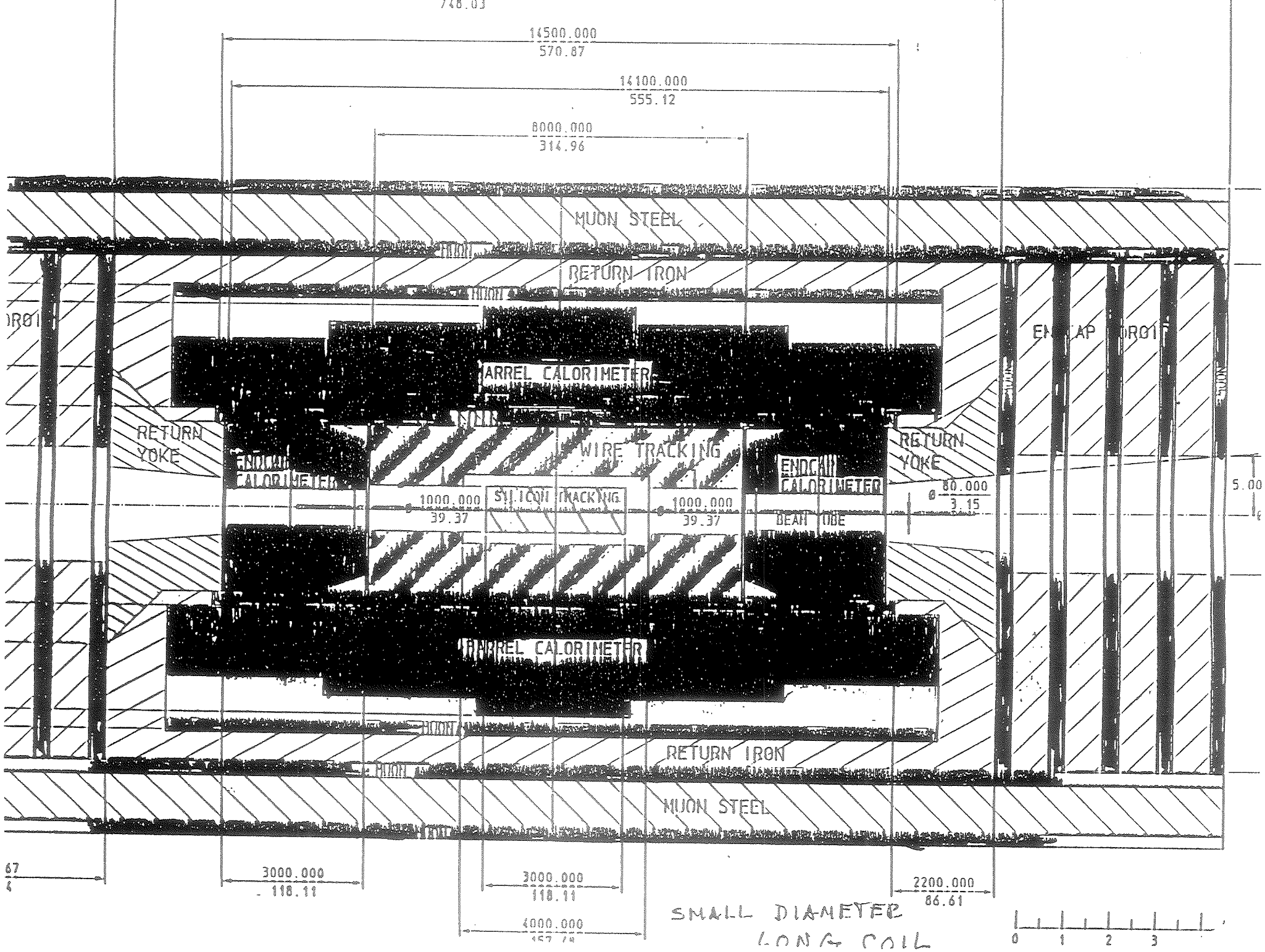


SMALL DIAMETER
LONG COIL

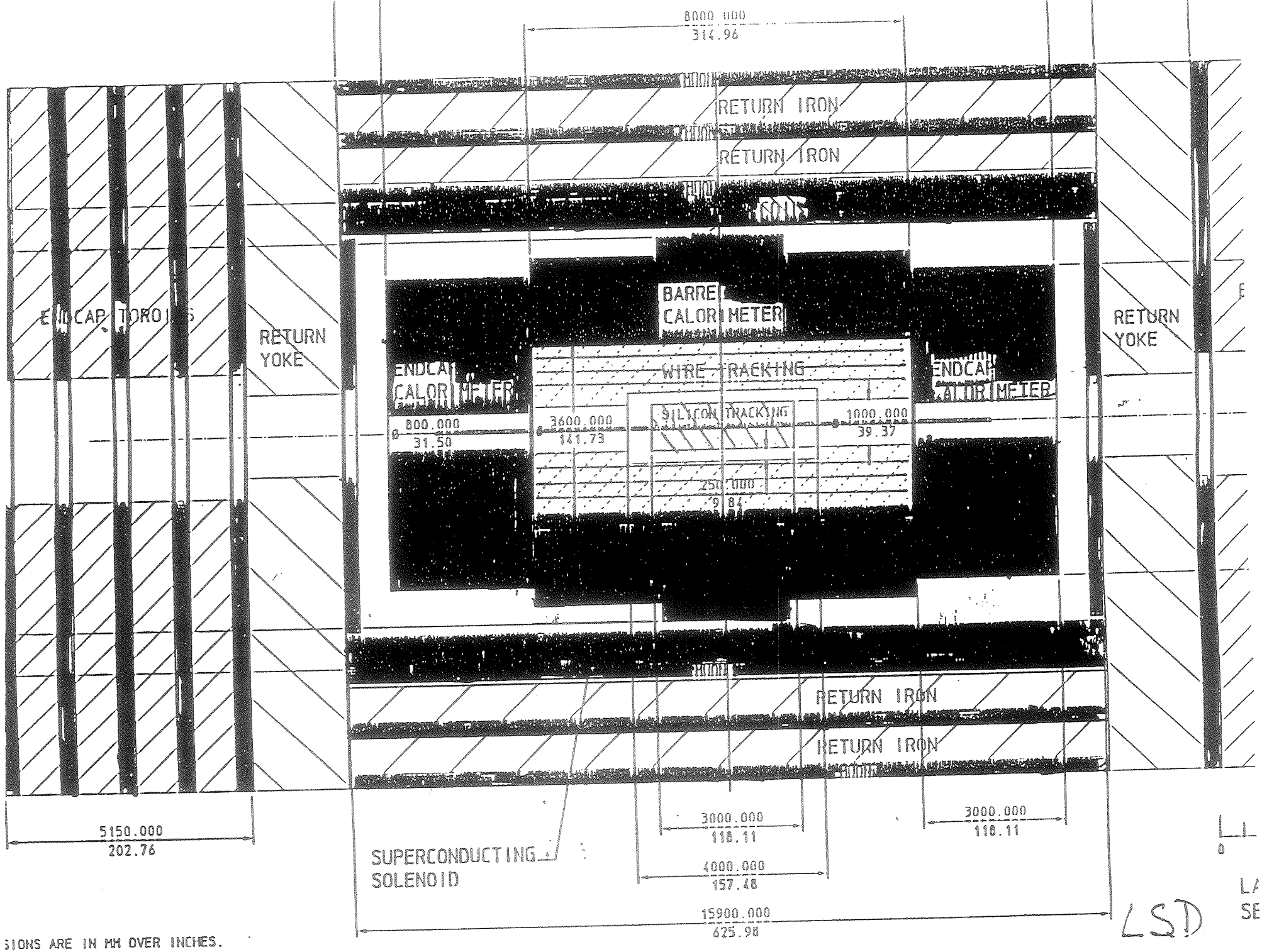


SIONS ARE IN MM OVER INCHES.