SSC DETECTOR SOLENOID DESIGN NOTE #36

TITLE: Summary of the Preliminary Design Report for the Superconducting Magnet of an SSC Detector

AUTHOR R.W. Fast, J.H. Grimson, R.D. Kephart, H.J. Krebs, D. Theriot, and R.H. Wands

DATE: July 26, 1989

This is the abstract submitted to the 1989 Cryogenic Engineering Conference and the viewgraphs shown during the oral presentation of the paper on July 26 at UCLA. The paper was not written or submitted to the editor of the proceedings.

ABSTRACT

The high-energy physics program on the Superconducting Super Collider (SSC) will probably include a magnetic detector in one of the interaction regions. A preliminary design report of a superconducting solenoid suitable for the detector has been prepared at Fermilab and could serve as the design specification for the industrial design and fabrication effort. The required magnetic field is 1.5 T over a volume 8 meters in diameter by 16 meters long. Because the coil-liquid helium-vacuum vessel modules will be buried inside the detector and virtually inaccessible for maintenance or repairs a conservative design philosophy was adopted. For example, the coil will be bath cooled and will have a quite low current density to guarantee that it will not be damaged in the unlikely event of a quench. Welded, stainless steel construction in accordance with the ASME Pressure Vessel Code will be used for both helium and vacuum vessels and the sizing of the Inconel cold-mass supports will include a substantial safety factor. The magnetostatic analysis and the calculation of the Lorentz forces were done with the finite-element analysis program ANSYS. The final paper will include the parameters and dimensions of the conductor, coil and vessels and will summarize the results of the magnetostatic, electrical, quench, thermal and stress analyses.

SLAC – PUB – 4434
September 1987
(T/E)

REPORT OF THE LARGE SOLENOID DETECTOR GROUP*

G. G. Hanson
Stanford Linear Accelerator Center, Stanford University, Stanford, California 94305

S. Mori
Institute of Applied Physics, University of Tsukuba
Sakura-mura, Niihari-gun, Ibaraki 305, Japan

L. G. Pondrom
Physics Department, University of Wisconsin, Madison, Wisconsin 53706

H. H. Williams
Physics Department, University of Pennsylvania, Philadelphia, Pennsylvania 19104

B. Barnett
Johns Hopkins University

V. Barnes
Purdue University

R. Cashmore
Oxford University

M. Chiba
Tokyo Metropolitan University

R. DeSalvo
Cornell University

T. Devlin
Rutgers University

R. Diebold
U.S. Department of Energy

P. Estabrooks
Carleton University

S. Heppelmann
University of Minnesota

I. Hinchliffe
Lawrence Berkeley Laboratory

J. Huston
Michigan State University

T. Kirk
Fermi National Accelerator Laboratory

A. Lankford
Stanford Linear Accelerator Center

D. Marlow
Princeton University

D. Miller
Purdue University

P. Oddone
Lawrence Berkeley Laboratory

S. Parker
University of Hawaii

F. C. Porter
California Institute of Technology

N. Tamura
Kyoto University

D. Theriot
Fermi National Accelerator Laboratory

G. Trilling
Lawrence Berkeley Laboratory

R. Wigmans
NIKHEF, Amsterdam

N. Yamdagni
University of Stockholm

* Work supported in part by the Department of Energy, contract DE-AC03-76SF00515.

To appear in the Proceedings of the Workshop on Experiments, Detectors, and Experimental Areas for the Supercollider, Berkeley, California, July 7-17, 1987

ABSTRACT

This report presents a conceptual design of a large solenoid detector for studying physics at the SSC. The parameters and nature of the detector have been chosen based on present estimates of what is required to allow the study of heavy quarks, supersymmetry, heavy Higgs particles, WW scattering at large invariant masses, new W and Z bosons, and very large momentum transfer parton-parton scattering. Simply stated, the goal is to obtain optimum detection and identification of electrons, muons, neutrinos, jets, W's and Z's over a large rapidity region. The primary region of interest extends over ± 3 units of rapidity, although the calorimetry must extend to ± 5.5 units if optimal missing energy resolution is to be obtained. A magnetic field was incorporated because of the importance of identifying the signs of the charges for both electrons and muons and because of the added possibility of identifying τ leptons and secondary vertices. In addition, the existence of a magnetic field may prove useful for studying new physics processes about which we currently have no knowledge. Since hermeticity of the calorimetry is extremely important, the entire central and endcap calorimeters were located inside the solenoid. This does not at the moment seem to produce significant problems (although many issues remain to be resolved) and in fact leads to a very effective muon detector in the central region.

1. Introduction

The main motivation for the SSC is the expectation that new physics in the form of new heavy particles, such as Higgs bosons, supersymmetric particles, heavy fermions, heavy W's or Z's, or composite particles, will be discovered in the TeV mass range. Such particles would be produced in the central rapidity region and would decay to high-p_T electrons, muons, or jets, often in events with large missing transverse energy (E_T) due to undetectable neutrinos.

The Large Solenoid Detector Group has studied a large 4π detector in a solenoidal magnetic field from two aspects:

1. Detector characteristics needed to look for the new physics
2. Improvements on the design of a large 4π solenoidal detector over previous designs [1-3].

Our large solenoid detector was conceived as being built with more-or-less "conventional" technology, although in practice such a detector would require a great deal of research and development to build, particularly for the calorimetry and electronics. Such a detector must be capable of operating at the SSC design luminosity of 10^{33} cm^{-2}s^{-1}. We also considered operation at lower and higher luminosities. The detector characteristics are dictated by the desire to detect and identify jets, electrons, muons, and neutrinos (via the missing momentum). Particular emphasis is placed on the identification of electrons and muons; backgrounds should be reduced to a level that is small compared to the rate for prompt real leptons. Since rates for interesting events will be small and the background processes complex, high priority was also given to the determination of the sign of the electric charge for both electrons and muons.

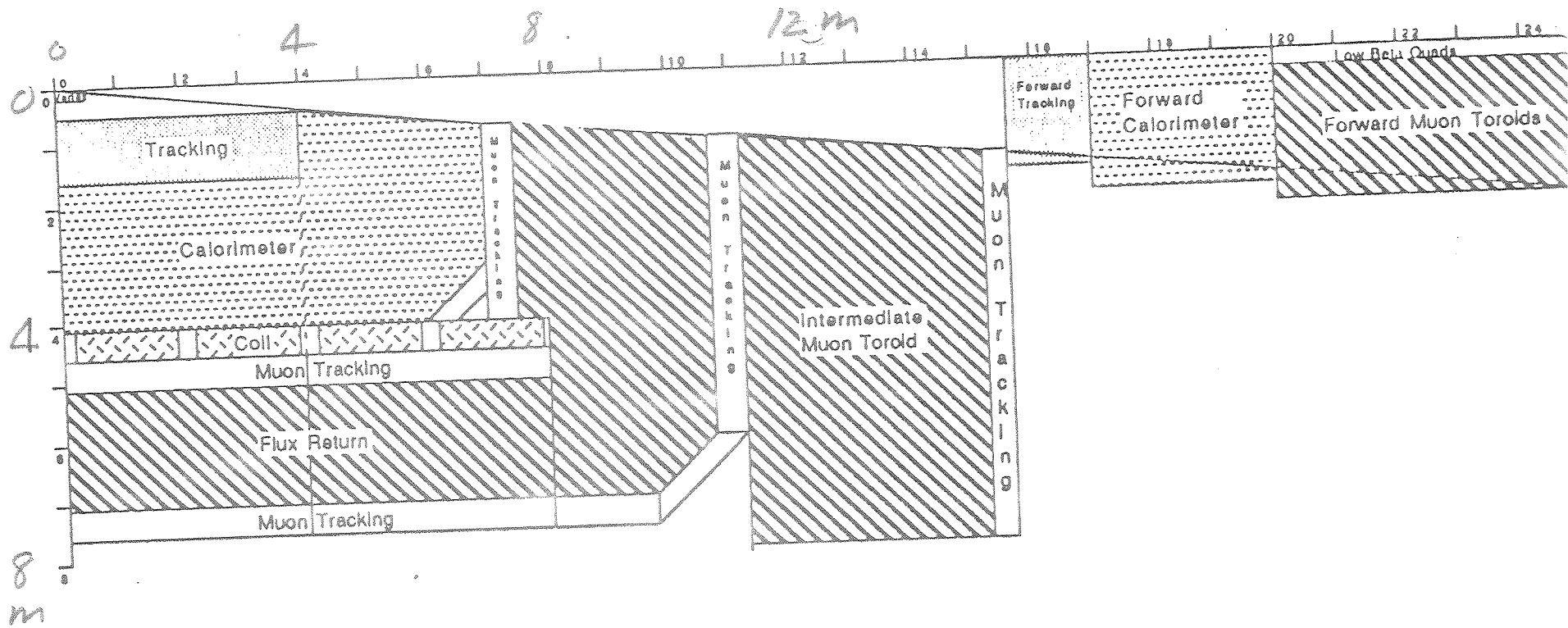

Figure 1: Schematic View of Large Solenoid Detector 7/15/87

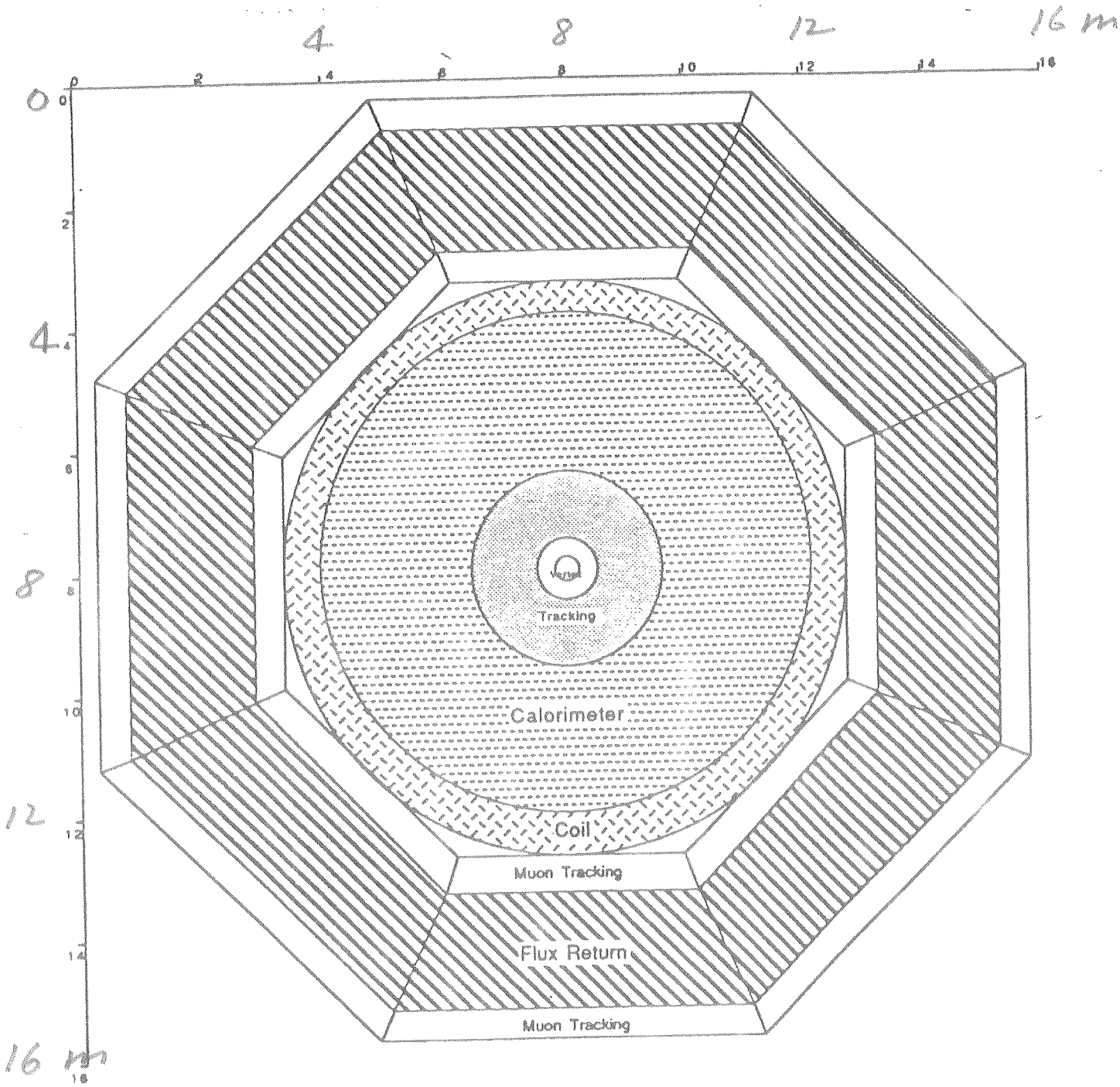

Figure 2: End View Large Solenoid Detector 7/15/87

REQUIREMENTS FROM 1987 BERKELEY WORKSHOP

8 x 16 m field volume

1.5 to 2 T

5000 tonnes of calorimetry inside bore

High predictability and reliability

EARLY DECISIONS

Calorimeter support independent of cryostat

2-m coil, helium vessel modules

Two, 8-m long cryostat assemblies

1.7 T

Bath cooled, cryostable, quench safe (T_{max} = 100 K), copper and stainless

Thermosiphon

Conservative in all design areas

OVERALL PARAMETERS

Cryostat module dimensions: 8.9 m ID x 11.3 m OD

Coil dimensions: 9.6 m ID x 10.0 m OD

Operating current: 5 kA

Total inductance: 112 H

Total stored energy: 1400 MJ

CONDUCTOR PARAMETERS

Material: Cu/Nb-Ti

Dimensions: 18 mm x 26 mm

Cu/Nb-Ti area ratio: 140

Conductor current density: 10.7 A/mm^2 at 5 kA

Fraction of short sample: 60%

Temperature margin: 2.3 K

Surface heat flux: 9.4 mW/cm^2 at 5 kA

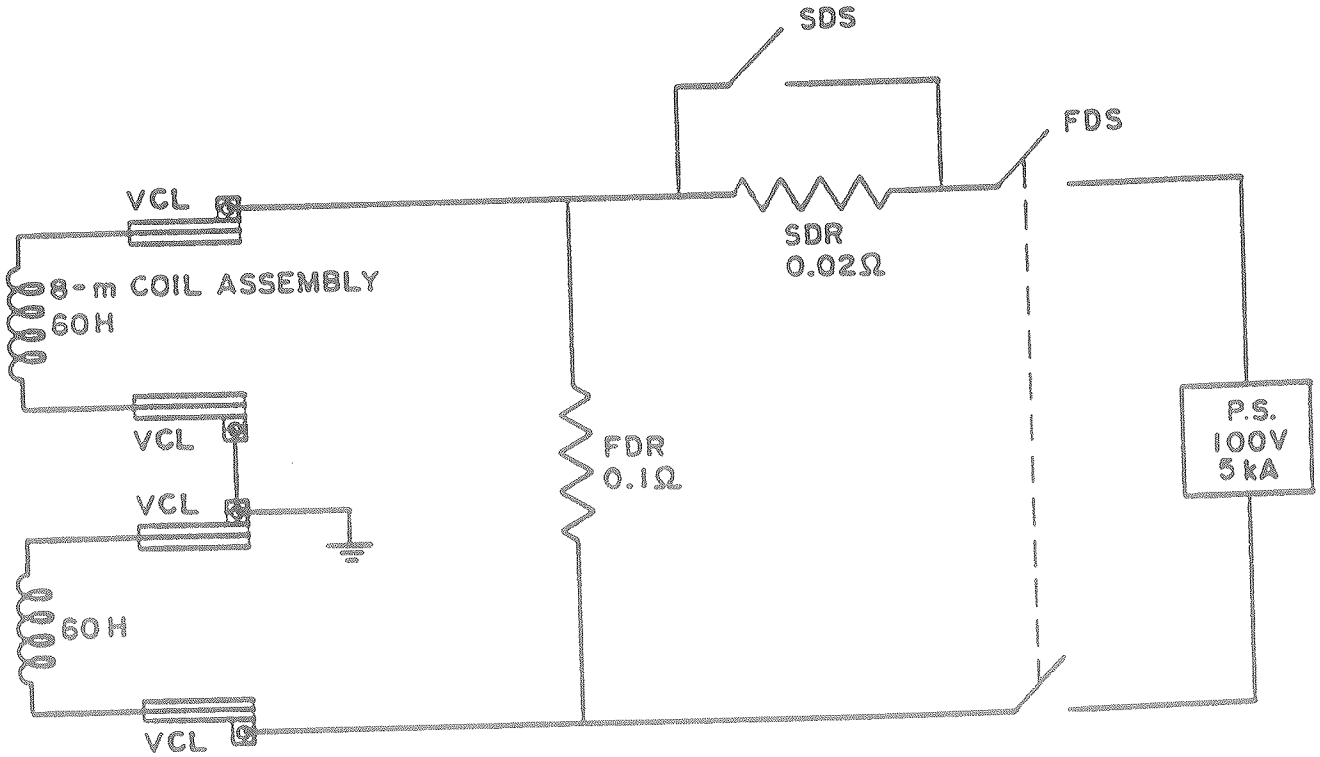
SDS
FDS
VCL
SDR
0.02Ω
8-m COIL ASSEMBLY
60 H
VCL
FDR
0.1Ω
P.S.
100V
5 kA
VCL
60 H
VCL

QUENCHING--FAST DISCHARGE PARAMETERS

Fast discharge resistor: 0.10 Ω

$$\int_0^\infty J^2(t)\ dt: 6.41 \times 10^{16}\ A^2\text{-s-m}^{-4}$$

$$\int_0^\infty I^2(t)\ dt: 14\ 000\ \text{MIITS}$$

T_{max}: 90 K

Total eddy current heating
- Coil: 700 W
- Helium vessel: 1500 W

CHARGING--SLOW DISCHARGE PARAMETERS

Slow discharge resistor: 0.02 Ω

Charge time: 1.5 h with 100 V

Slow discharge time: 2 h

Total eddy current heating: 90 W

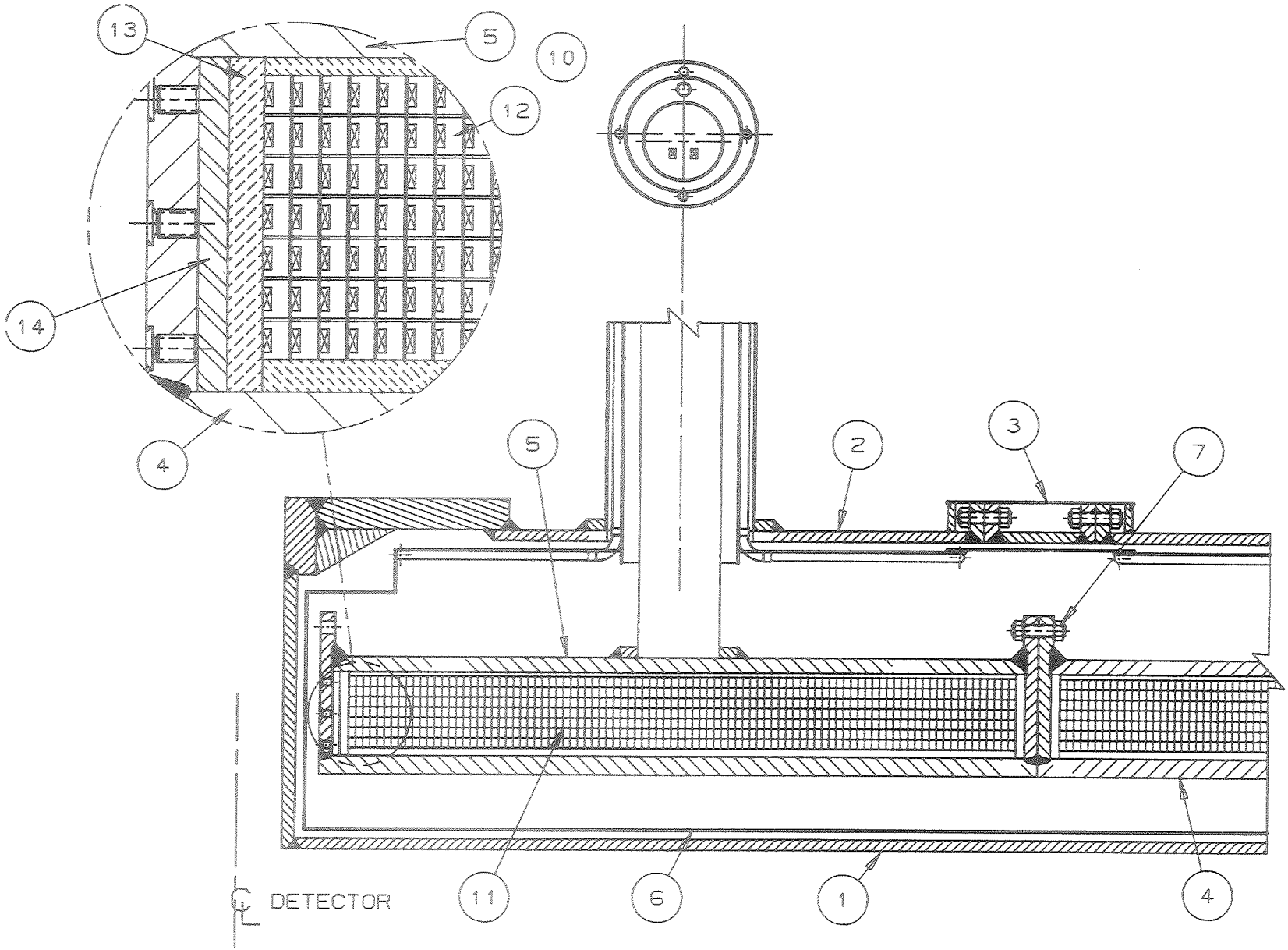
13
5
10
12
14
4
5
2
3
7
11
6
1
4
DETECTOR

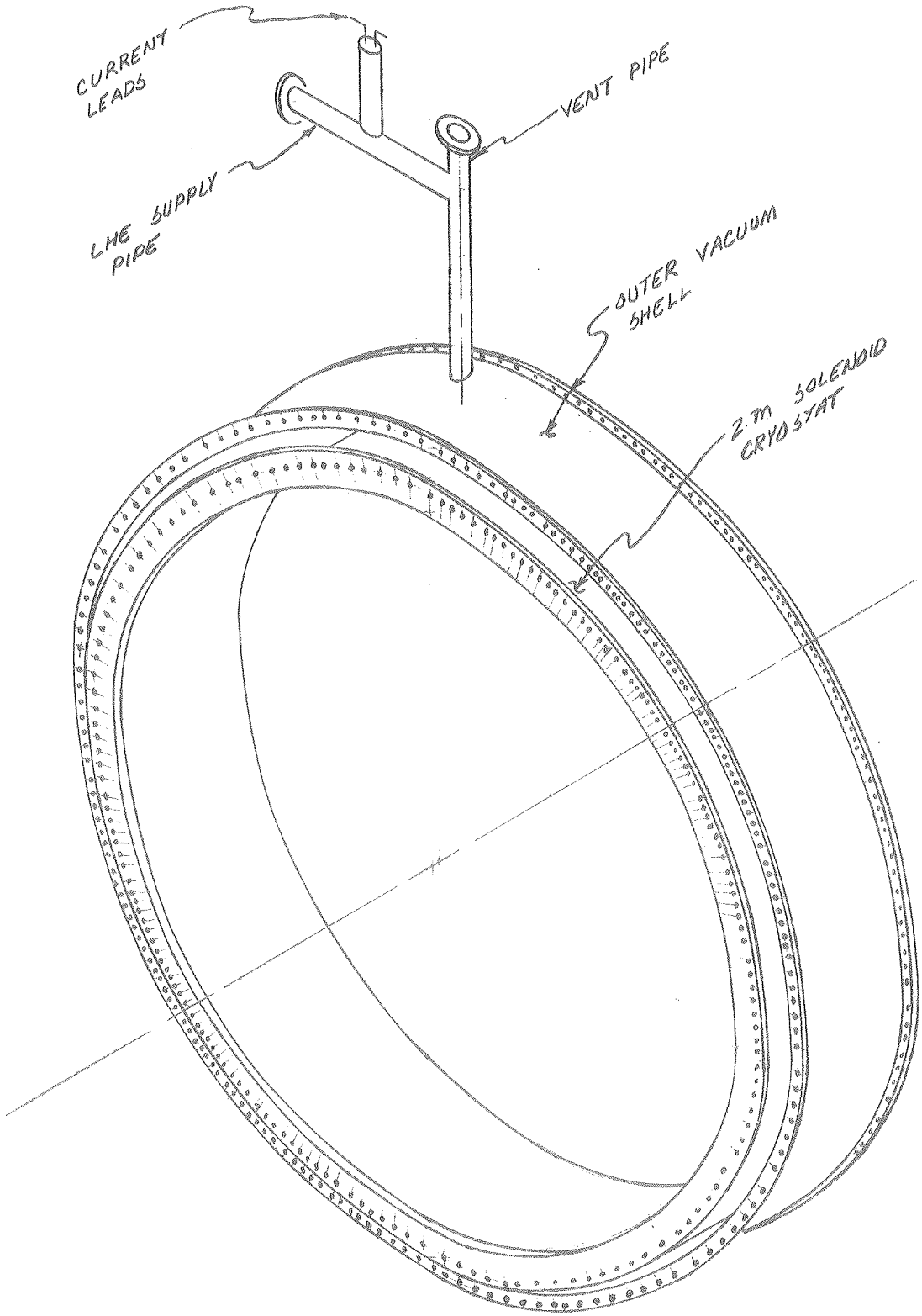
CURRENT LEADS
VENT PIPE
LHE SUPPLY PIPE
OUTER VACUUM SHELL
2 m SOLENOID CRYOSTAT

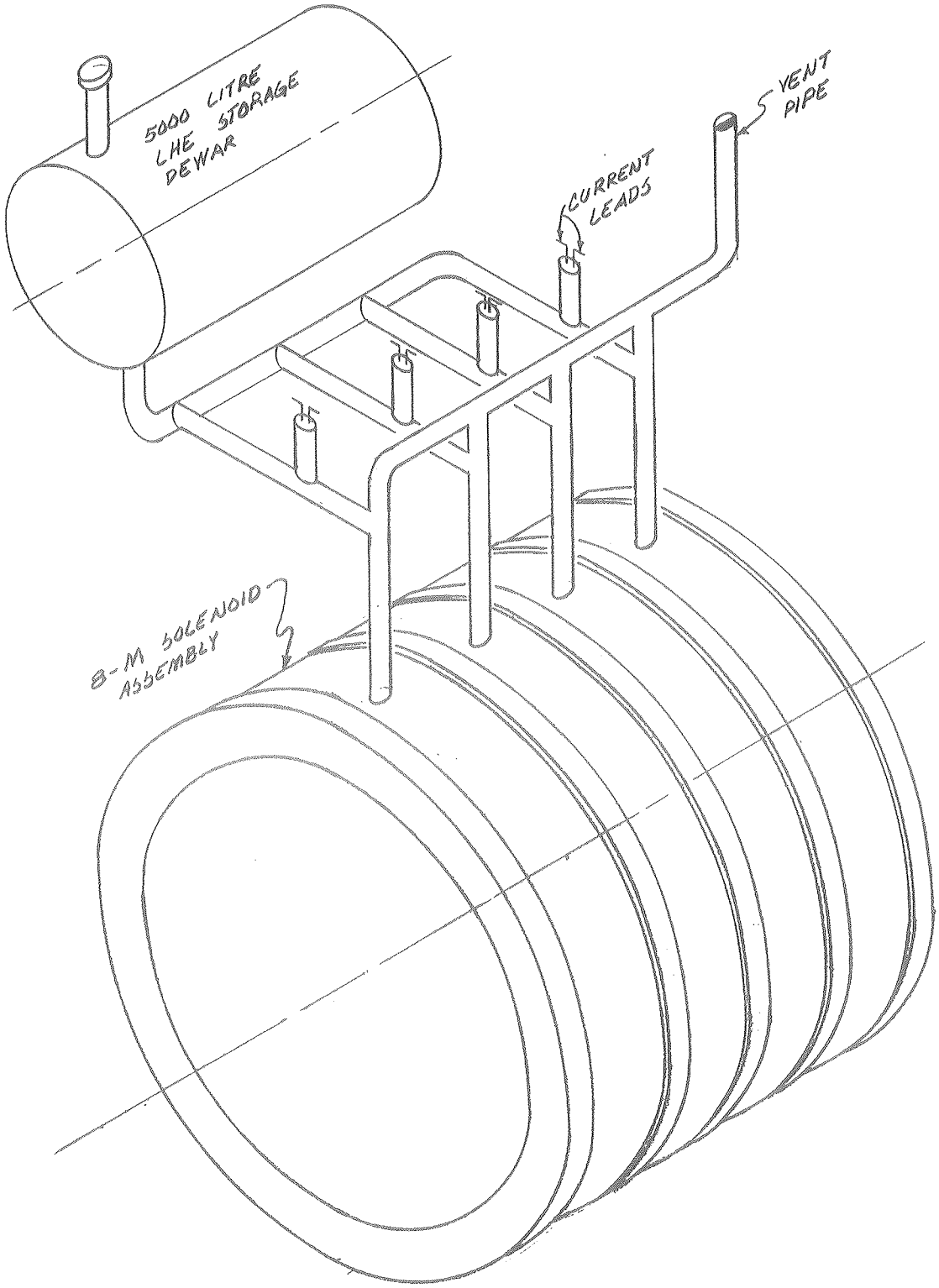
5000 LITRE
LHE STORAGE
DEWAR
VENT
PIPE
CURRENT
LEADS
8-M SOLENOID
ASSEMBLY

WEIGHTS

Weight and length of conductor
- 2-m module: 80 tonnes, 18 km
- total: 360 tonnes, 145 km

Cold mass
- 2-m module: 165 tonnes
- 8-m assembly: 660 tonnes
- total: 1320 tonnes

Weight of each 8-m assembly: 800 tonnes

MANUFACTURING ISSUES

Coil winding: vendor's plant or on SSC site?

Assembly and testing of 2-m modules: Where?

Overland transportation to Texas site: possible but expensive

COMPARISON WITH OTHER LARGE SC MAGNETS

UTSI dipole (Argonne)----------210 MJ

15-ft bubble chamber solenoid (Fermilab)-- 400 MJ

Big European Bubble Chamber (CERN)---- 800 MJ

MFTF (Livermore)----------1050 MJ

9x 16 Detector solenoid (SSC)----------1400 MJ

LCT Tokamak (Oak Ridge)----------4000 MJ

CONCLUSION OF STUDY

A conservative, cryostable solenoid to generate 1.7 T over a volume 8 x 16 m is feasible. Optimization of parameters may result in a more cost-effective design. Issues of manufacturability and transportation are important and remain to be studied.