SPREADER BAR

I.D. Nº 21 COLOR OF BAR: ALUMINUM

LOAD CAPACITY PAINTED ON BAR 5 TONS.

DATE CAP. & I.D. Nº PAINTED ON BAR 9-6-88

DATE OF LAST LOAD TEST. 9-6-88

TEST LOAD WEIGHT 12150 ~~TONS~~ LBS "H" BLOCK

TEST LOAD % 121.5%

STRESS CALCULATIONS:

DONE BY N. BOSEK

DATE 8-29-88

REMARKS:

SPREADER BAR Nº 21 PAINT COLOR _____

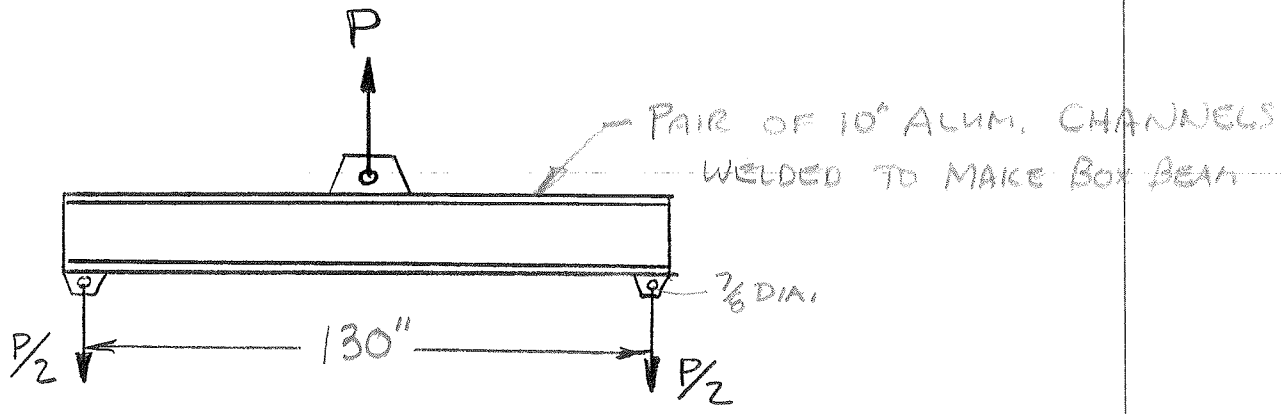

BEAM SIZE C10 X ~~15.3~~ Aluminum

$d = 10''$ $\quad A_w = d \cdot t_w = 2.4$

$L = 130''$

$d/A_f = 8.81/2 = 4.405$ $\quad M = \frac{PL}{4} = 32.5P$

$S_x = 13.5 \times 2 = 27$

$t_w = .24$ $\quad V = \frac{P}{2}$

BENDING STRESS:

$\frac{40{,}000 \text{ psi}}{3} = 13{,}333$

$F_{b\ ALLOW} = \cancel{12{,}000}\ 13{,}333$ psi

OR $F_{b\ ALLOW} = \frac{12 \times 10^6}{L \cdot d/A_f} = \frac{12 \times 10^6}{130 \times 4.405} = 20{,}955$ psi

USE THE LEAST

$\therefore f_{b\ MAX} = \frac{M}{S_x} = \frac{32.5P}{27} = 13333$ $\quad P = 11076$ LBS $= 5.54$ TONS

SHEAR STRESS:

$F_{V\ ALLOW} = \frac{.4\ F_y}{3} = 4800$ psi

$\therefore f_{V\ MAX} = \frac{V}{A_w} = \frac{P}{2 \times 2.4} = 4800$ $\quad P = 23040$ LBS

SUMMARY: $\therefore P =$ 5 TONS

BAR Nº 21

WELD STRENGTH 1/4 FILLET. = 1600 lb/IN. = .8 TON/IN.

CENTER PLATES = $\frac{44''}{2} \times .8 \times 2$ = 35.2 TON CAP. > 5 TON

END PLATES = $\frac{20 + 10.2}{2} \times .8$ = 12 TON CAP. > 5 TON

BEAM DEFLECTION.

$$\delta = \frac{PL^3}{48EI} = \frac{11076 \times 130^3}{48 \times 10^7 \times 67.4 \times 2} = .376''$$

$$\delta_{MAX} = \frac{L}{360} = .361''$$

SHACKLE CAPACITY AT BEAM ENDS

7/8 DIA. = 5 TON MAX WORKING LOAD.