SPREADER BAR

I.D. Nº 19 COLOR OF BAR: Blue

LOAD CAPACITY PAINTED ON BAR 3 TONS.

DATE CAP. & I.D. Nº PAINTED ON BAR Aug. 1988 REPAINTED FEB 6, 1989

DATE OF LAST LOAD TEST. August 3, 1988

TEST LOAD WEIGHT 4.1 TONS

TEST LOAD % 136.6%

STRESS CALCULATIONS:

DONE BY Bosek + Miranda

DATE Aug. 1988

REMARKS: TESTED OK

Blue 219

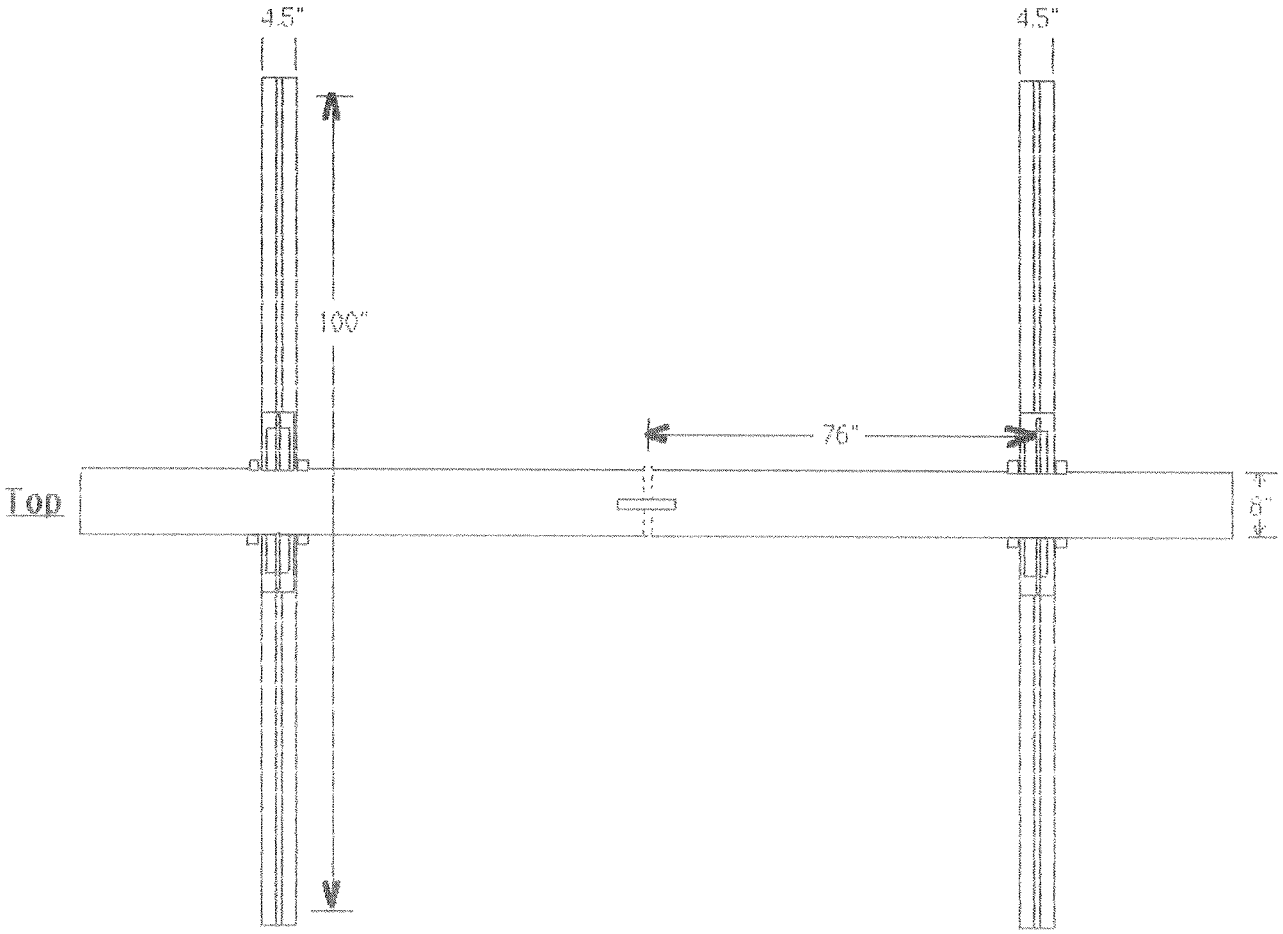

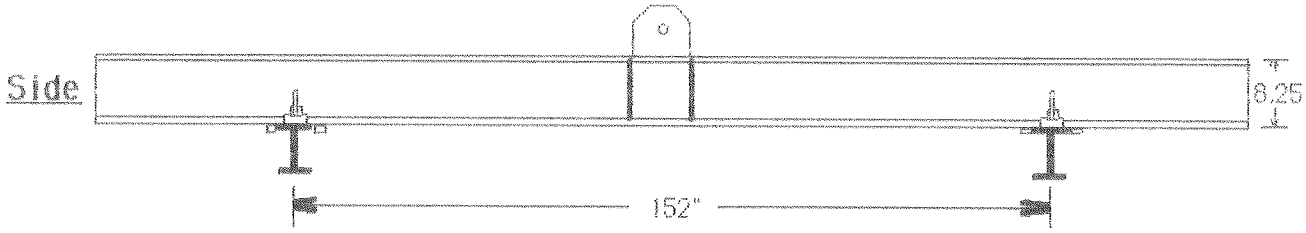

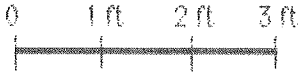

scale: 1/2" = 1'

Deflection of the beam at point of load is a maximum of $\frac{Pl^3}{48EI}$ where

$P = 8200$ lbs

$l = 152$ in

$E = 29 \times 10^6$

$I = 110$ in^4

$$\therefore \text{Deflection} = \frac{(8200)(152)^3}{48(29000000)(110)} = \underline{\underline{0.18 \text{ in}}}$$

ABout 920 lb
CHAMBER
TO LIFT

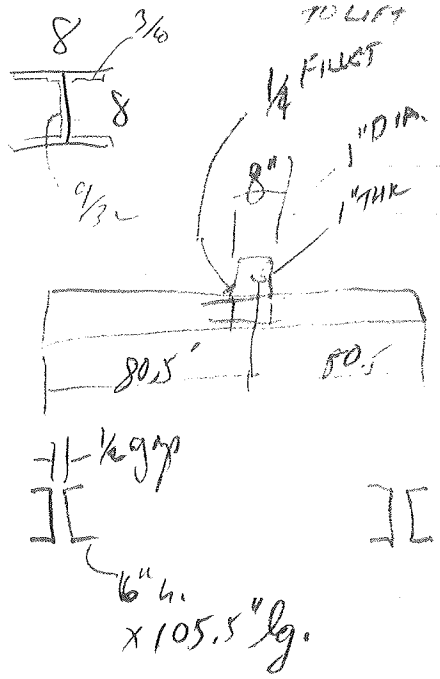

SPREADER BAR | # 19 | N. BOSEK

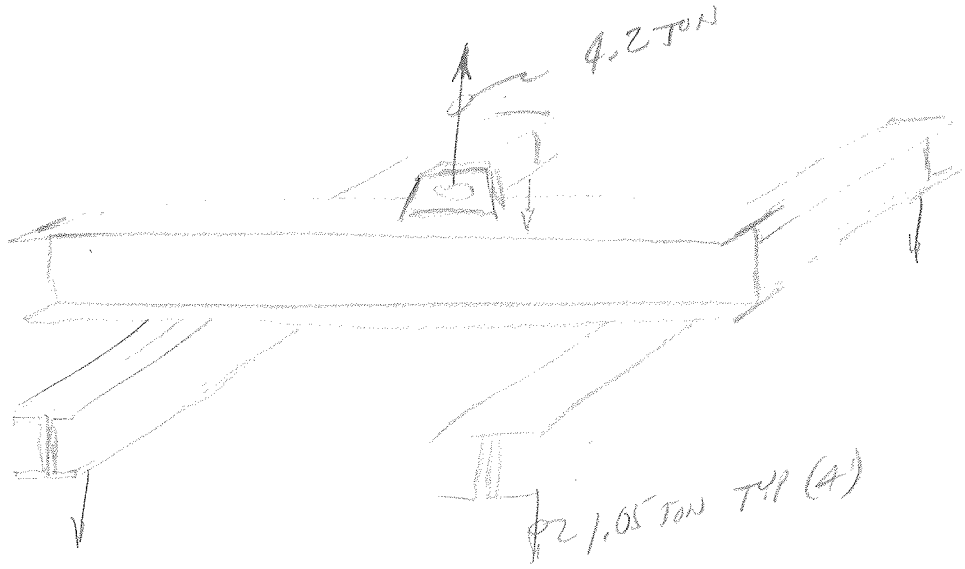

TEST AT WITH "E" BLOCK ON (4) CORNERS

8200 lb

PAINT 4 TON CAPACITY I.D. NO 19

WILL BE TESTING AT $\frac{8200}{8000}$ = 1.02% OVER LOAD

SPREADER BAR Nº 19 PAINT COLOR BLUE

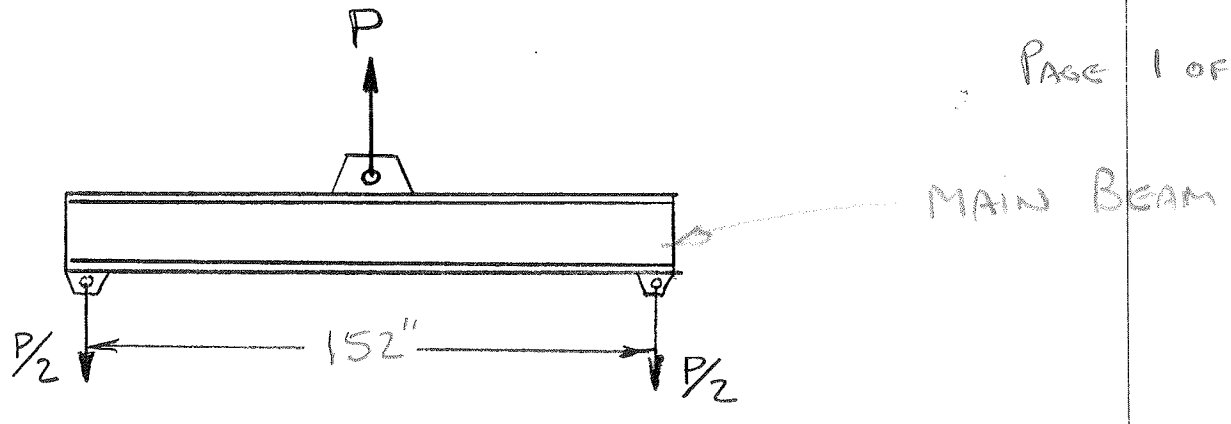

BEAM SIZE WF 8x31

$d = 8$

$L = 152$

$d/A_f = 2.31$

$S_x = 27.4$

$t_w = .288$

$A_w = d \cdot t_w = 2.304$

$M = \frac{PL}{4} = 38P$

$V = \frac{P}{2}$

BENDING STRESS:

$F_{b\ ALLOW} = 12{,}000$ psi

OR $F_{b\ ALLOW} = \frac{12 \times 10^6}{L \cdot d/A_f} = \frac{12 \times 10^6}{152 \times 2.31} = 34{,}176$ psi

USE THE LEAST

$\therefore f_{b\ MAX} = \frac{M}{S_x} = 12{,}000 = \frac{38P}{27.4}$ P = 8652 LBS P = 4.3 TONS

SHEAR STRESS:

$F_{V\ ALLOW} = \frac{.4\ F_y}{3} = 4800$ psi

$\therefore f_{V\ MAX} = \frac{V}{A_w} = \frac{4800}{2000} = \frac{P}{2 \times 2.304}$ P = 11.06 TONS

TEST 5½ T.

SUMMARY: $\therefore P = 4.3$ TONS

SPREADER BAR Nº 19 PAINT COLOR BLUE

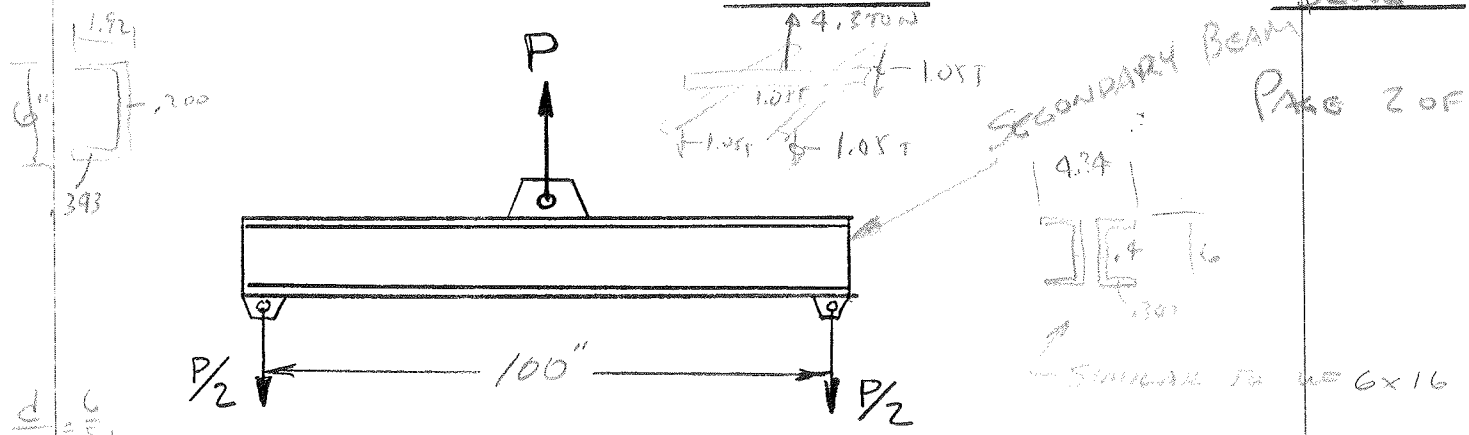

$\frac{d}{A_f} = \frac{6}{9.1}$

$A_f = 9.1$

BEAM SIZE PAIRED C6x8.2

$d =$ 6.00

$L =$ 100

$d/A_f =$ 4.55

$S_x =$ 8.76

$t_w =$ .400

$A_w = d \cdot t_w =$ 2.4

$M = \frac{PL}{4} =$ 25P

$V = \frac{P}{2}$

BENDING STRESS:

$F_{b\ ALLOW} = 12{,}000$ psi

OR $F_{b\ ALLOW} = \frac{12 \times 10^6}{L \cdot d/A_f} = \frac{12 \times 10^6}{100 \times 4.55} =$ 26373 psi

USE THE LEAST

$\therefore f_{b\ MAX} = \frac{M}{S_x} = 12{,}000 = \frac{25P}{8.76}$ P = 4204 LBS = 2.1 TONS

SHEAR STRESS:

$F_{V\ ALLOW} = \frac{.4\ F_y}{3} = 4800$ psi

$\therefore f_{V\ MAX} = \frac{V}{A_w} = \frac{4800}{2000} = \frac{P}{2 \times 2.4}$ P = 11.52 TONS

SUMMARY: $\therefore$ P = 2.1 TONS

Field Data
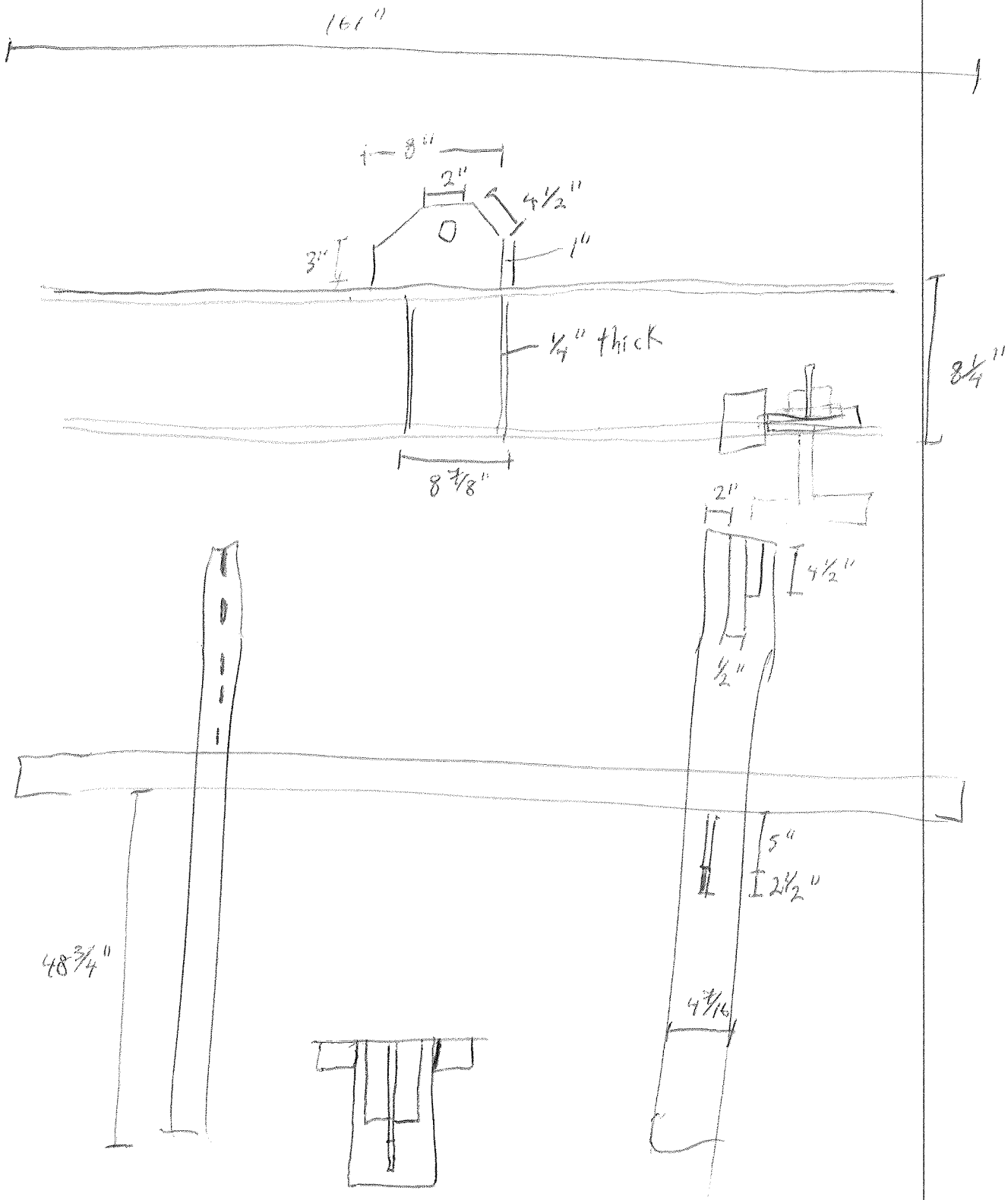
#19