SPREADER BAR

I.D. Nº 18 COLOR OF BAR: Red

LOAD CAPACITY PAINTED ON BAR 9 TONS.

DATE CAP. & I.D. Nº PAINTED ON BAR Aug. 1988

DATE OF LAST LOAD TEST. Aug 10 1988

TEST LOAD WEIGHT 10.15 TONS

TEST LOAD % 112.8%

STRESS CALCULATIONS:

DONE BY Bosek & Miranda

DATE Aug. 1988

REMARKS: Capacity painted on one side only.

Red #18

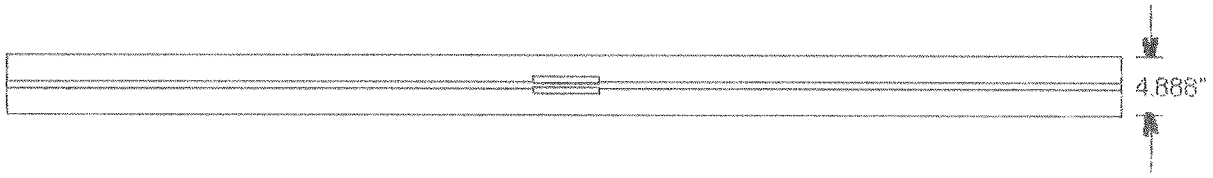

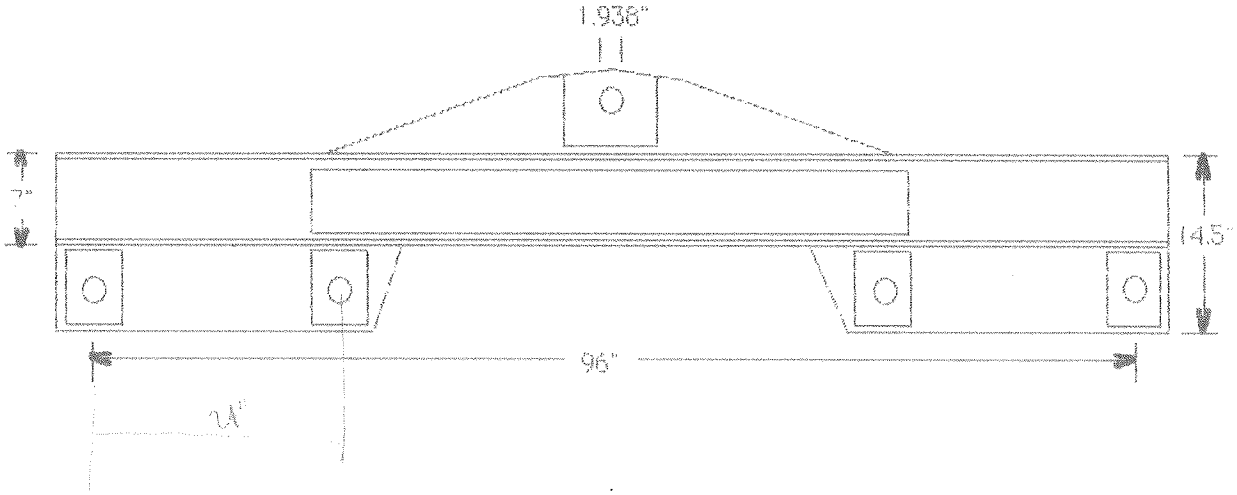

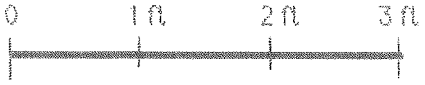

scale: 3/4" = 1'

SPREADER BAR № 18 | PAINT Color Red

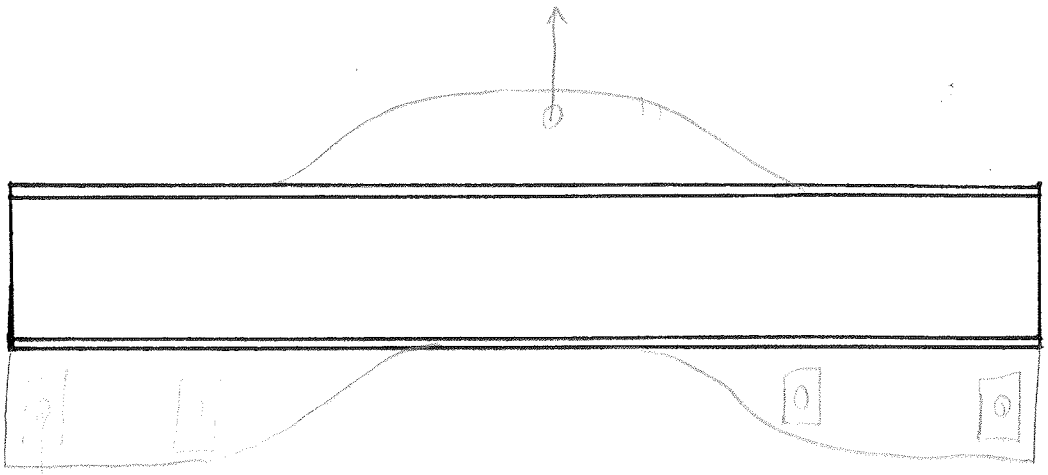

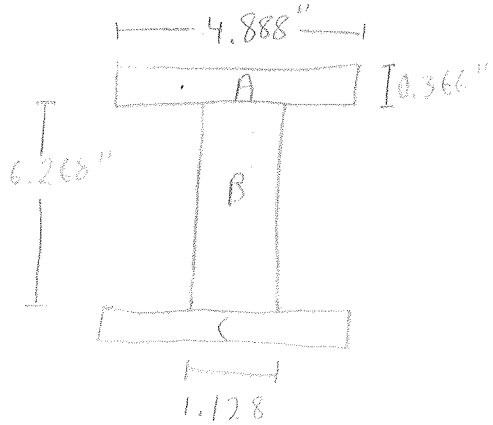

$h = 3.5$ in

Section	Base (in)	Height (in)	I (in⁴)	Area (in²)	r (in)	r' (in)	Ar'² (in²)
A	4.888	0.366	0.02	1.789	6.817	3.317	19.683
B	1.128	6.268	23.148	7.07	3.5	0	0
C	4.888	0.366	0.02	1.789	0.183	3.317	19.683

$c = 3.5$ in

$I_{xx} = \boxed{62.555 \text{ in}^4}$

$S_{xx} = \underline{17.873 \text{ in}^3}$

SPREADER BAR Nº 18 PAINT COLOR Red

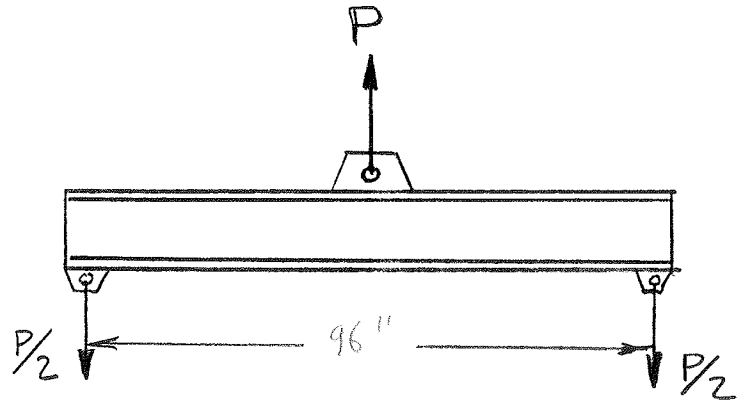

BEAM SIZE SPECIAL

$d =$ 7 in

$L =$ 96 in

$d/A_f =$ 8.71

$S_x =$ 11.667 in^3

$t_w =$ 1.128

$A_w = d \cdot t_w =$ 7.896

$M = \frac{PL}{4} =$ 24P

$V = \frac{P}{2}$

BENDING STRESS:

$F_{b\ ALLOW} = 12{,}000$ psi ✓

OR $F_{b\ ALLOW} = \frac{12 \times 10^6}{L \cdot d/A_f} = \frac{12 \times 10^6}{(96)(8.71)} =$ 14,351 psi

USE THE LEAST

$\therefore f_{b\ MAX} = \frac{M}{S_x} = \frac{24P}{17.833} = 12{,}000$ $\therefore P =$ 8937 lbs

= 4,468 tons ✓

SHEAR STRESS:

$F_{V\ ALLOW} = \frac{.4\ F_y}{3} = 4800$ psi

$\therefore f_{V\ MAX} = \frac{V}{A_w} = \frac{P}{(2)(7.896)} = 4800$ $\therefore P =$ 75,802 lbs

SUMMARY: $\therefore P =$ 4.5 TONS → adjusted later

SPREADER BAR Nº 18 PAINT COLOR

Bosck

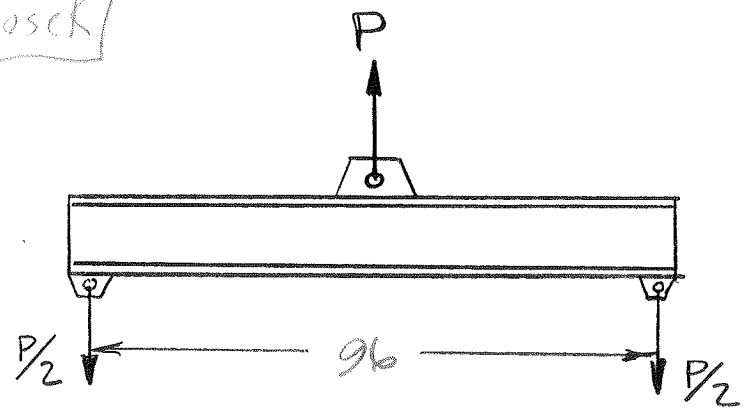

STRESS AT CENTER

BEAM SIZE _____

$d = 14.5$

$L = 96$

$d/A_f = 8.465$

$S_x = 39.071$

$t_w = 1.232$

$A_w = d \cdot t_w = 15.4$

$M = \frac{PL}{4} = 24P$

$V = \frac{P}{2}$

BENDING STRESS:

$F_{b\ ALLOW} = 12{,}000$ psi

OR $F_{b\ ALLOW} = \frac{12 \times 10^6}{L \cdot d/A_f} = \frac{12 \times 10^6}{} = 14{,}766$ psi

USE THE LEAST

$\therefore f_{b\ MAX} = \frac{M}{S_x} = 12{,}000 = \frac{24P}{39.071}$ $P = 19{,}535$ lb. $= 9.77$ TONS

SHEAR STRESS:

$F_{V\ ALLOW} = \frac{.4\ F_y}{3} = 4800$ psi

$\therefore f_{V\ MAX} = \frac{V}{A_w} = \frac{4800}{2000} = \frac{P}{2 \times 15.4}$ $P = 23.9$ TONS

SUMMARY: $\therefore P = 9.8$ TONS

PAINT 9 TON

NB
8-1-88

STRESS AT CENTER

STRESS AT CENTER

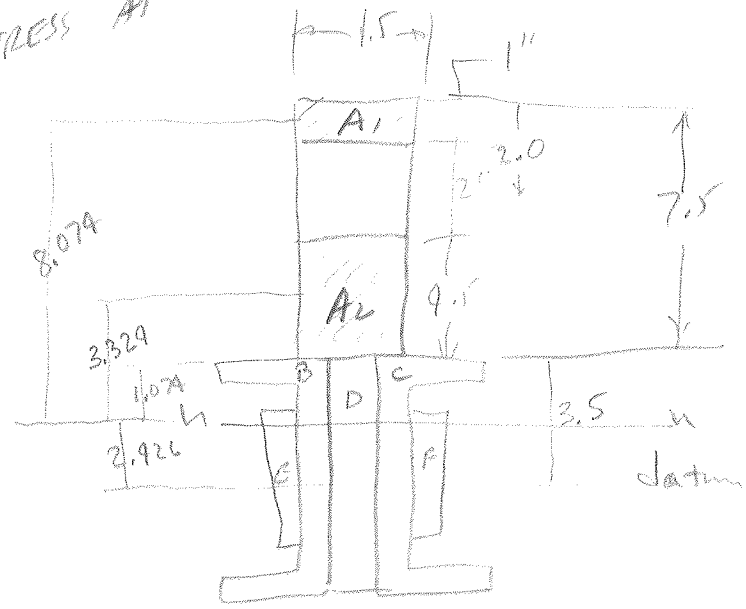

	Area	d	A×d	r	Ar^2	I
A_1	1.5	10.5	15.75	8.074	97.784	.125
A_2	6.75	5.75	38.8125	3.324	74.581	11.391
B				2.426	16.891	
C				2.426	16.891	
D				2.426	20.599	
E				2.426	14.714	
F				2.426	14.714	
Σ	22.49		Σ = 54.5625		Σ = 256.173	78.8236

$$r = \frac{\Sigma Ad}{\Sigma A} = 2.426$$

$$I_{TOTAL} = \Sigma I + \Sigma r^2 A = 334.997$$

$$S = \frac{I}{c} = 39.071 \text{ in}^3$$

SPREADER BAR Nº 18 PAINT COLOR _____

Bosck

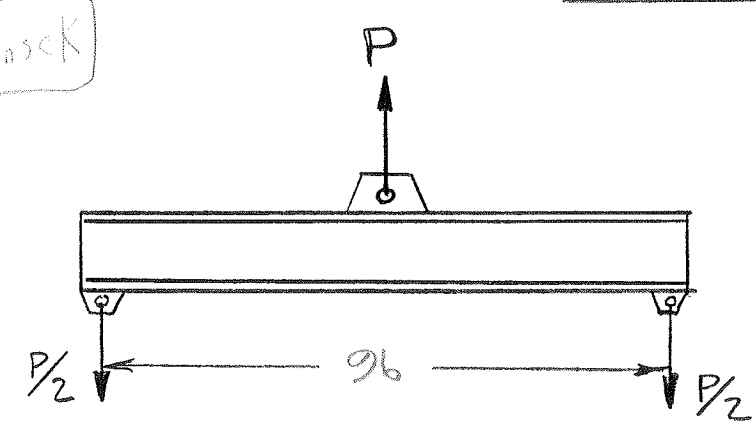

STRESS 1" OFF CENTER

BEAM SIZE _____

$d = 14.5$

$L = 96''$

$\frac{14.5}{(2.09(2)+.5)\times .366}$ $d/A_f = 8.465$

$S_x = 57.742$

$t_w = 1.232$

$A_w = d \cdot t_w = 17.864$

$M = \frac{PL}{4} = 24P$

$V = \frac{P}{2}$

BENDING STRESS:

$F_{b\ ALLOW} = 12{,}000$ psi

OR $F_{b\ ALLOW} = \frac{12 \times 10^6}{L \cdot d/A_f} = \frac{12 \times 10^6}{96 \times 8.465} = 14{,}766$ psi

USE THE LEAST

$\therefore f_{b\ MAX} = \frac{M}{S_x} = 12{,}000 = \frac{24P}{57.742}$ $P = 28871$ lb $= 14.43$ TONS

SHEAR STRESS:

$F_{V\ ALLOW} = \frac{.4\ F_y}{3} = 4800$ psi

$\therefore f_{V\ MAX} = \frac{V}{A_w} = \frac{4800}{2000} = \frac{P}{2 \times 17.864}$ $P = 85.7$ TONS

SUMMARY: $\therefore P =$ _____ TONS

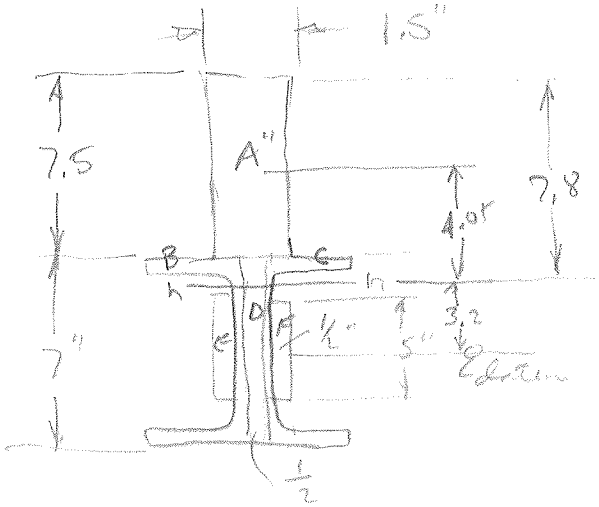

STEEL 1" OFF CENTER

	AREA	d	Axd	r	I	Ar^2
A	11.25	7.25	81.5625	4.05	52.734	184.528
B	2.87	0	0	3.2	21.3	29.389
C	2.87	0	0	3.2	21.3	29.389
D	3.5	0	0	3.2	14.292	35.84
E	2.5	0	0	3.2	5.208	25.6
F	2.5	0	0	3.2	5.208	25.6
	Σ 25.49		Σ = 81.5625		Σ 120.043	Σ = 330.396

$$r = \frac{\Sigma Axd}{\Sigma A} = \frac{81.5625}{25.49} = 3.2$$

$$I_{TOTAL} = \Sigma I + \Sigma Ar^2 = 450.384 \text{ IN}^4$$

$$S = \frac{I}{c} = \frac{450.\ldots}{7.8} = 57.742 \text{ IN}^3$$

Field Data

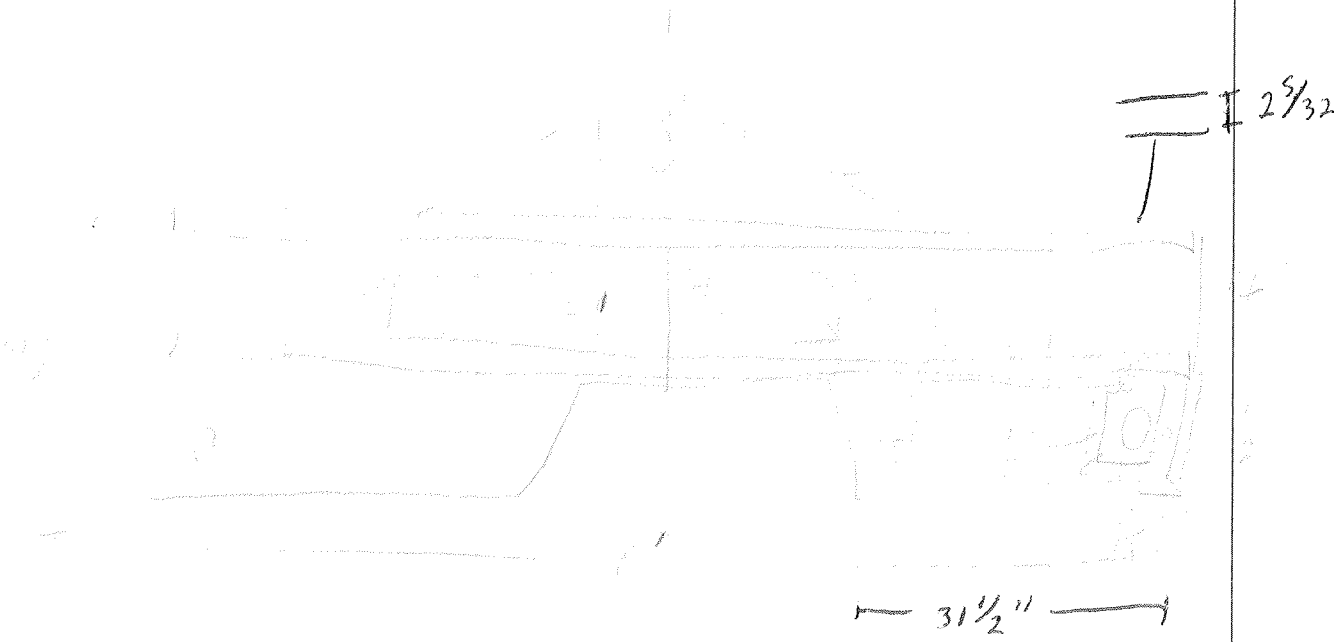

lbs