SPREADER BAR

I.D. Nº 14 COLOR OF BAR: BLACK & RED

LOAD CAPACITY PAINTED ON BAR 3 TONS.

DATE CAP. & I.D. Nº PAINTED ON BAR 2-6-89

DATE OF LAST LOAD TEST. 2-3-89

TEST LOAD WEIGHT 4.1 TONS

TEST LOAD % 136.6%

STRESS CALCULATIONS:

DONE BY N. BOSEK

DATE 1-26-89

REMARKS:

SPREADER BAR Nº 14 PAINT COLOR BLACK & RED

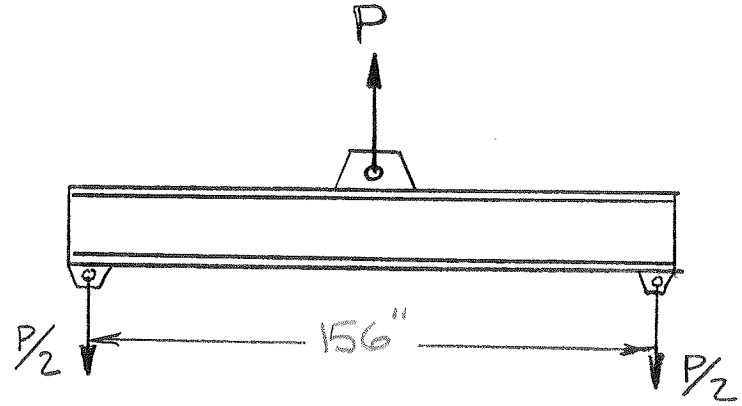

BEAM SIZE WF 10 x 45

$d = 10.12$

$L = 156$

$d/A_f = 2.04$

$S_x = 49.1$

$t_w = .35$

$A_w = d \cdot t_w = 3.542$

$M = \frac{PL}{4} = 39P$

$V = \frac{P}{2}$

BENDING STRESS:

$F_{b\ ALLOW} = 12{,}000$ psi

OR $F_{b\ ALLOW} = \frac{12 \times 10^6}{L \cdot d/A_f} = \frac{12 \times 10^6}{156 \times 2.04} = 37{,}707$ psi

USE THE LEAST

$\therefore f_{b\ MAX} = \frac{M}{S_x} = 12{,}000 = \frac{39P}{49.1}$ $P = 15107$ lb. ≈ 7.55 TONS

SHEAR STRESS:

$F_{V\ ALLOW} = \frac{.4\ F_y}{3} = 4800$ psi

$\therefore f_{V\ MAX} = \frac{V}{A_w} = \frac{P}{2 \times 3.542} = 4800$ $P = 34{,}000$ lb.

SUMMARY: $\therefore P =$ 7.55 TONS FOR MAIN BEAM ONLY

SEE PAGE 2 OF 2

SPREADER BAR Nº 14 PAINT COLOR

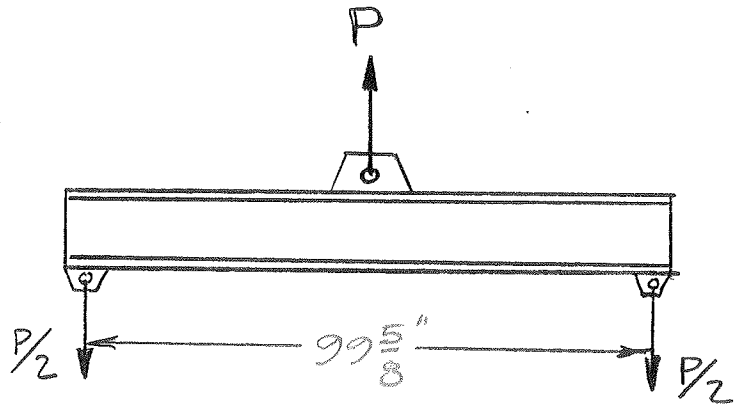

BEAM SIZE PAIR OF CHANNELS "C" 6 - 10.5 ON EACH END OF MAIN BEAM

$d = 6$ $\qquad A_w = d \cdot t_w = 4.116$

$L = 99.625$

$d/A_f = 8.59 \times 1/2$ $\qquad M = \frac{PL}{4} = 24.906\,P$

$S_x = 5.06 \times 2$

$t_w = .343 \times 2$ $\qquad V = \frac{P}{2}$

BENDING STRESS:

$F_{b\ ALLOW} = 12{,}000$ psi

OR $F_{b\ ALLOW} = \frac{12 \times 10^6}{L \cdot d/A_f} = \frac{12 \times 10^6}{99.625 \times 8.59 \times 1/2} = 28044$ psi

USE THE LEAST

$\therefore f_{b\ MAX} = \frac{M}{S_x} = 12{,}000 = \frac{24.906\,P}{5.06 \times 2}$ $\quad P = 4875$ lb. ≈ 2.43 TONS

SHEAR STRESS:

$F_{V\ ALLOW} = \frac{.4\,F_y}{3} = 4800$ psi

$\therefore f_{V\ MAX} = \frac{V}{A_w} = 4800 = \frac{P}{2 \times 4.116}$ $\quad P = 39513$ lb.

SUMMARY:

$\therefore P = 2.43 \times 2$ TONS $= 4.86$ TONS

EACH END OF MAIN BEAM

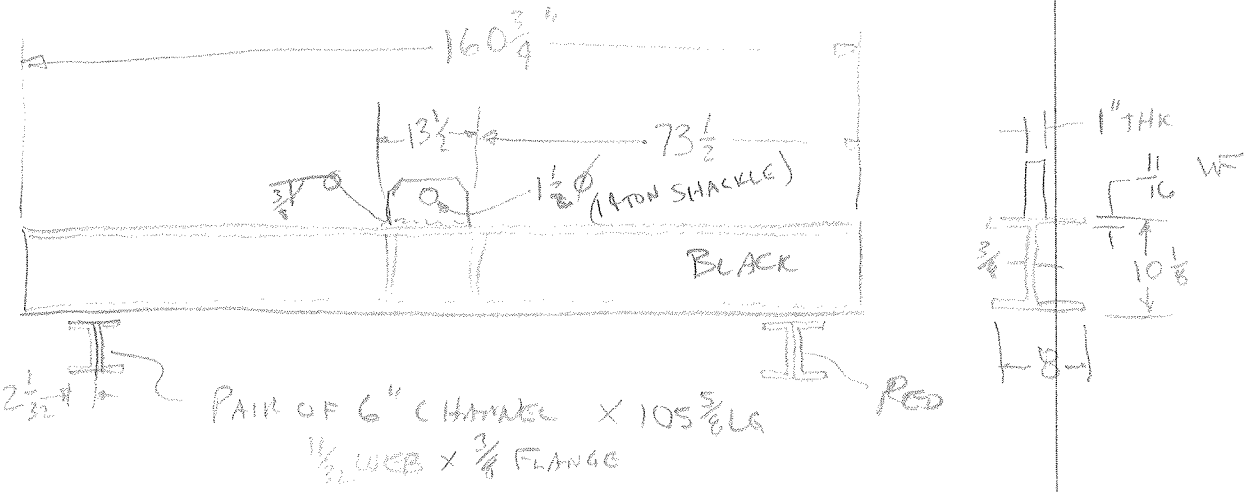
160 3/4"
13 1/2
73 1/2
1 1/2 ϕ (14 TON SHACKLE)
BLACK
1" THK
11/16 WF
3/8
10 1/8
8
2 1/32
PAIR OF 6" CHANNEL × 105 5/8 LG
11/32 WEB × 3/8 FLANGE
RED

147
12.5
160.5

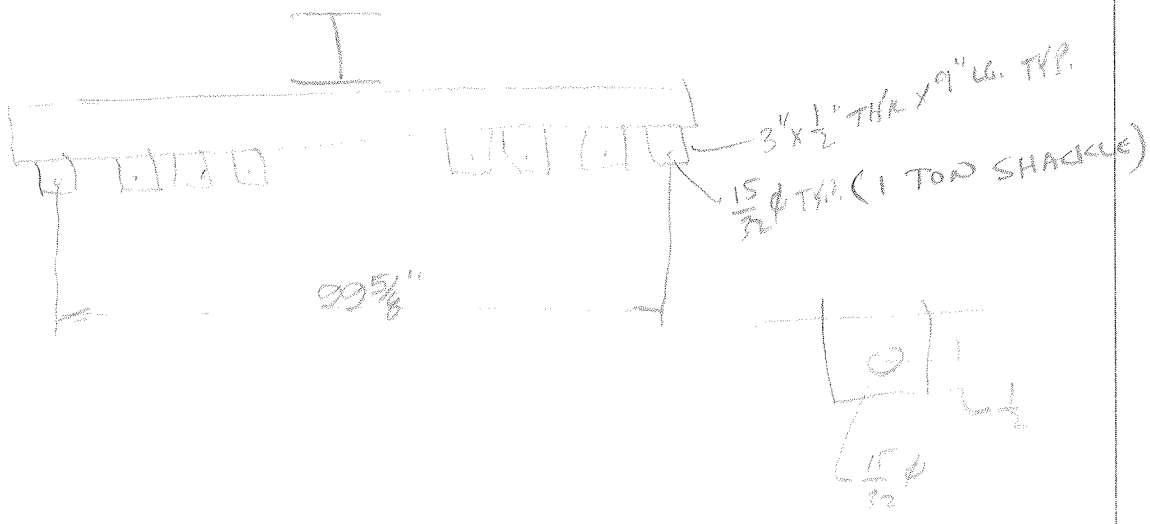
3" × 1/2" THK × 9" LG. TYP.
15/32 ϕ THR. (1 TON SHACKLE)
95 5/8"
1/2
15/32 ϕ

E-2050