SPREADER BAR

I.D. Nº 13 COLOR OF BAR: Blue

LOAD CAPACITY PAINTED ON BAR _____ TONS.

DATE CAP. & I.D. Nº PAINTED ON BAR _____

DATE OF LAST LOAD TEST. _____

TEST LOAD WEIGHT _____ TONS

TEST LOAD % _____

STRESS CALCULATIONS:

DONE BY Rosek + Miranda

DATE July + Aug 1988

REMARKS: Calculations not clear. Bar was not tested or painted.

Blue #13

Top

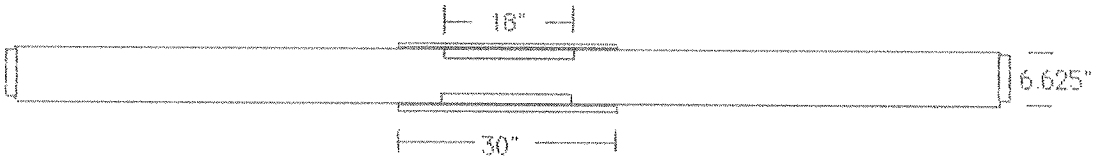

Side

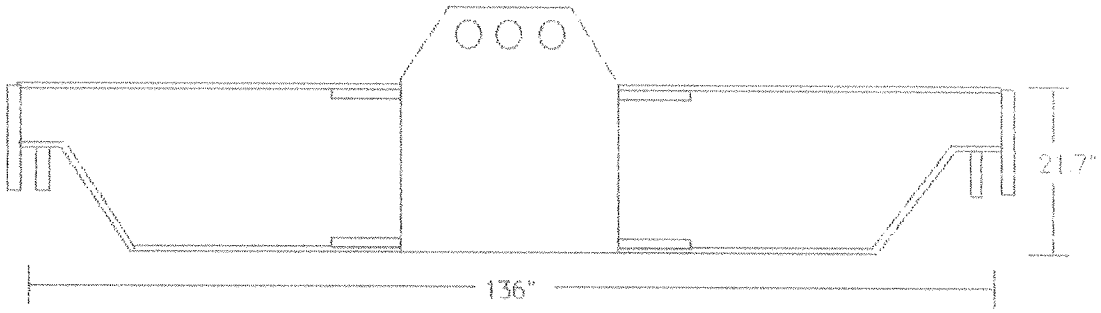

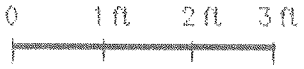

scale: 1/2" = 1'

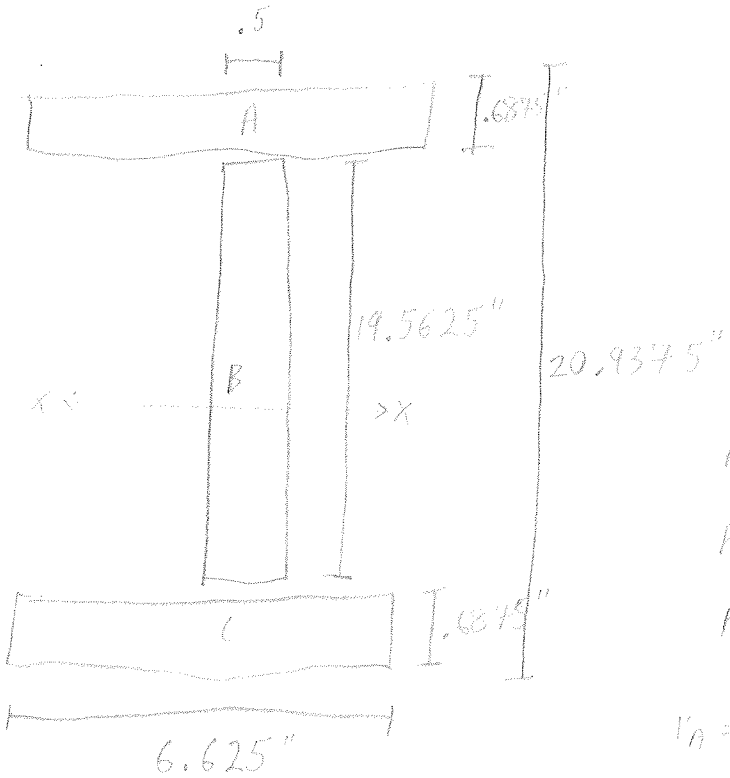

$$I_A = \frac{(6.625)(.6875)^3}{12} = .1794 \text{ in}^4$$

$$I_B = \frac{(.5)(19.5625)^3}{12} = 311.9336 \text{ in}^4$$

$$I_C = I_A = .1794 \text{ in}^4$$

$$A_A = (.6875)(6.625) = 4.5547 \text{ in}^2$$

$$A_B = (.5)(19.5625) = 9.7813 \text{ in}^2$$

$$A_C = A_A = 4.5547 \text{ in}^2$$

$$Y_B = \frac{19.5625}{2} = 10.2813 \text{ in}$$

$$Y_A = 0$$

$$Y_C = Y_A = 10.2813 \text{ in}$$

$$c = \frac{20.9375}{2} = 10.4688$$

$$I_{xx} = .1794 + (4.5547)(10.2813)^2 + 311.9336 + .1794 + (4.5547)(10.2813)^2$$

$$= 1245 \text{ in}^4$$

$$S_{xx} = \frac{I_{xx}}{c} = \frac{1245 \text{ in}^4}{10.4688} = 121.8 \text{ in}^3$$

$$\frac{d}{A_F} = \frac{20.9375}{4.5547} = 4.597$$

SPREADER BAR Nº 13 PAINT COLOR Blue

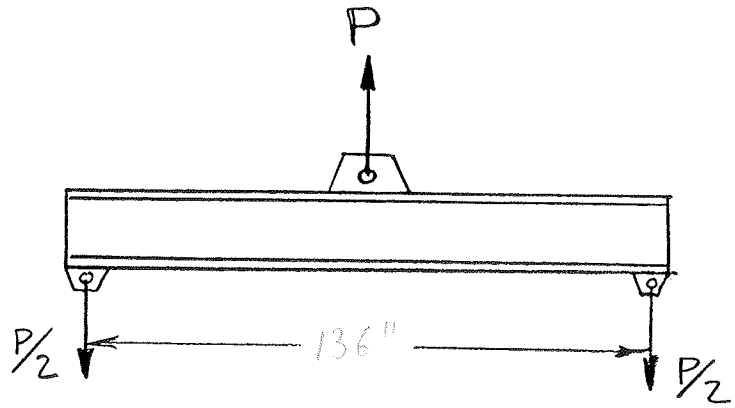

BEAM SIZE SPECIAL

$d =$ 20.94 in

$L =$ 136 in

$d/A_f =$ 4.597

$S_x =$ 121.2 in³

$t_w =$. in

$A_w = d \cdot t_w =$ 10.47 in²

$M = \frac{PL}{4} =$ 34P

$V = \frac{P}{2}$

BENDING STRESS:

$F_{b\ ALLOW} = 12{,}000$ psi

OR $F_{b\ ALLOW} = \frac{12 \times 10^6}{L \cdot d/A_f} = \frac{12 \times 10^6}{136(4.597)} =$ 19,194 psi

USE THE LEAST

$\therefore f_{b\ MAX} = \frac{M}{S_x} = \frac{34P}{121.2} = 2000$

$\therefore P = 42{,}958$ lbs

$= 21.5$ tons

SHEAR STRESS:

$F_{V\ ALLOW} = \frac{.4\ F_y}{3} = 4800$ psi

$\therefore f_{V\ MAX} = \frac{V}{A_w} = \frac{P}{2(10.47)} = 4800$

$\therefore P = 100{,}512$ lbs

$= 50.25$ tons

SUMMARY: $\therefore P =$ 21.5 TONS

SPREADER BAR № 13	Leon	PAINT Color Blue

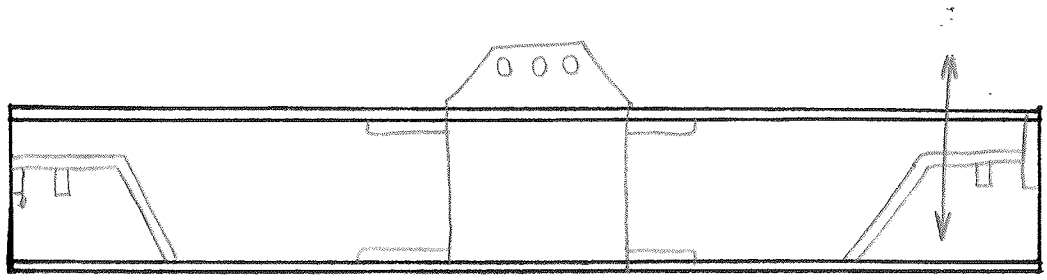

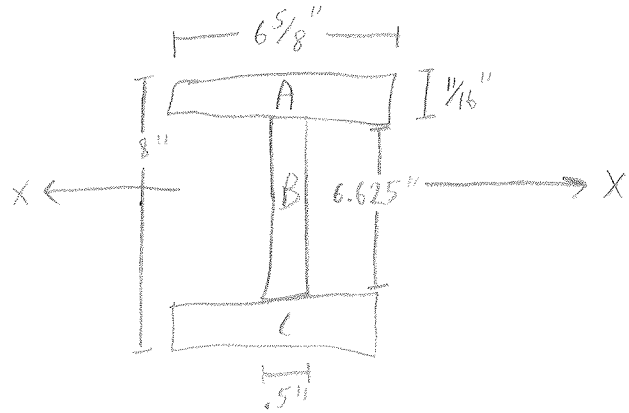

$\boxed{h = 4\ in}$

Section	Base (in)	Height (in)	I (in⁴)	Area (in²)	r (in)	r' (in)	Ar'² (in²)
A	6.625	0.688	0.179	4.558	7.656	3.656	60.924
B	0.5	6.625	12.116	3.313	4	0	0
C	6.625	0.688	0.179	4.558	0.344	3.656	60.924

$c =$ 4 in

$I_{xx} =$ 134.322 in⁴

$S_{xx} =$ 33.58 in³ < 121.8 in³ ⇒ see back

SPREADER BAR Nº 13 PAINT COLOR LIGHT BLUE

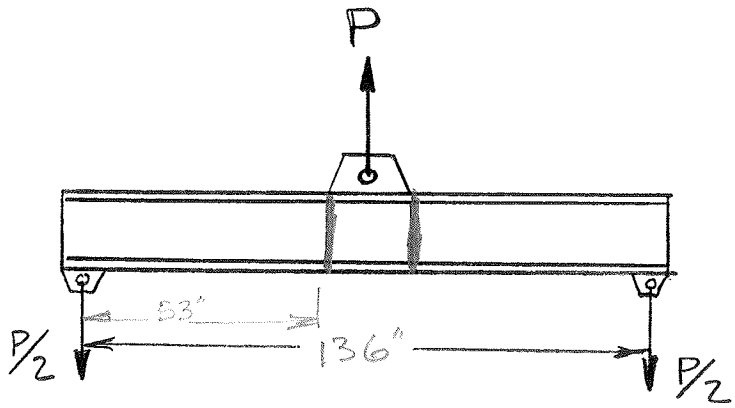

136
−30
106 ÷ 2 = 53

BEAM SIZE W21x49

$d = 20.82$ $\quad A_w = d \cdot t_w = 7.6618$

$L_2 = 136$ $\quad L_1 = 53$

$d/A_f = 6$ $\quad M = \frac{PL}{4} = \frac{136P}{4} = 34P$

$S_x = 93.3$

$t_w = .368$ $\quad V = \frac{P}{2}$

BENDING STRESS:

$F_{b\ ALLOW} = 12{,}000$ psi

OR $F_{b\ ALLOW} = \frac{12 \times 10^6}{L_1 d/A_f} = \frac{12 \times 10^6}{53 \times 6} = 37{,}735$ psi

USE THE LEAST

$\therefore f_{b\ MAX} = \frac{M}{S_x} = 12{,}000 = \frac{34P}{93.3}$ $\quad P = 32{,}929$ lb $= 16.46$ TONS

IF BEAM WERE NOT MODIFIED

SHEAR STRESS:

$F_{V\ ALLOW} = \frac{.4\ F_y}{3} = 4800$ psi

$\therefore f_{V\ MAX} = \frac{V}{A_w} = \frac{4800}{2000} = \frac{P}{2 \times 7.6618}$ $\quad P = 36.77$ TONS

SEE PAGE 2

SUMMARY:

$\therefore P = 29.85$ TONS

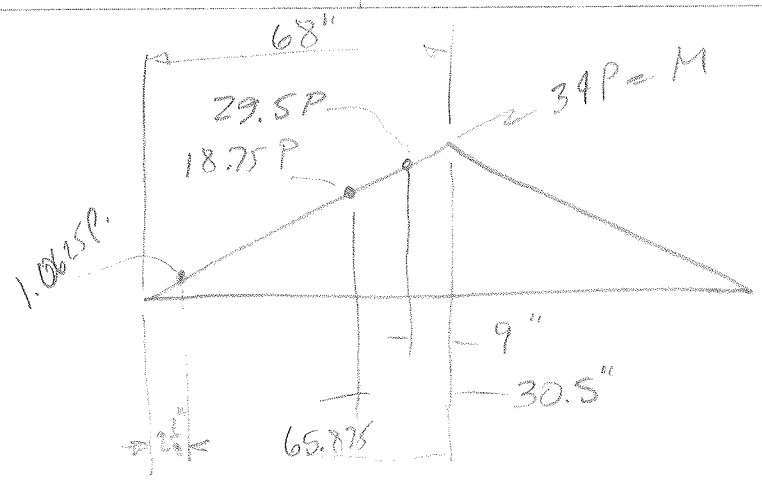

MOMENT DIAG.

$$12{,}000 = \frac{18.75P}{93.3}$$

$$\boxed{P = 29.856 \text{ TONS}} \text{ @ } 30.5''$$

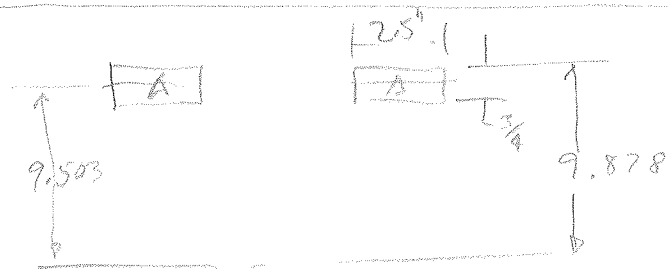

$$I_A = \frac{2.5 \times .75^3}{12} = .0879$$

$$I_{nn} = Ar^2 = 169.3256$$

$$I_{SUB\ TOTAL} = \Sigma I_A + \Sigma I_{nn}$$

$$= 677.654 \text{ IN}^4$$

$$I_{TOTAL} = 971 + 677.654$$

$$= 1648.654 \text{ IN}^4$$

$$S_{TOTAL} = 158.372 \text{ IN}^3$$

$$12{,}000 = \frac{29.5P}{158.372}$$

$$\boxed{P = 32.21 \text{ TONS}}$$

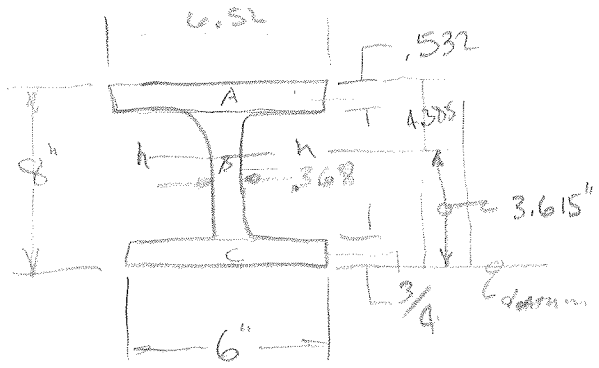

	AREA	height	dist TO datum	AREA X d TO d	I	r	Ar²
"A"	3.4686	.532	7.734	26.826	.0818	4.119	58.8488
B	2.4722	6.718	3.734	9.231	9.2979	.119	.035
C	4.500	.75	.375	1.688	.2109	3.24	47.2392
	Σ = 10.441			Σ = 37.744	Σ = 9.5906		Σ = 106.123

$$r = \frac{\Sigma A \times dd}{\Sigma A} = 3.615$$

$$I_{TOTAL} = \Sigma I + \Sigma Ar^2$$

$$I_{TOTAL} = 115.7136 \text{ IN}^4$$

$$S = \frac{I}{c} = \frac{115.7136}{4.385} = 26.3885 \text{ IN}^3$$

$$12{,}000 = \frac{M}{S} = \frac{1.0625\,P}{26.3885}$$

$P = 298035$ LB

$\boxed{P = 149 \text{ TONS.}}$

BEAM #13

IT IS WF I BEAM

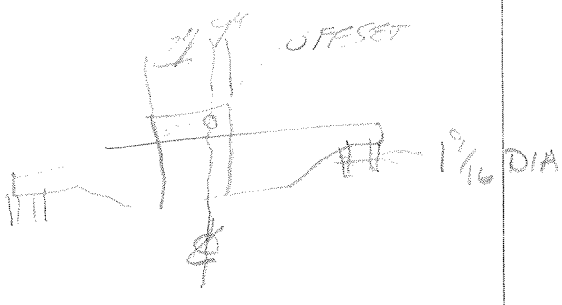

SECTION AT CENTER

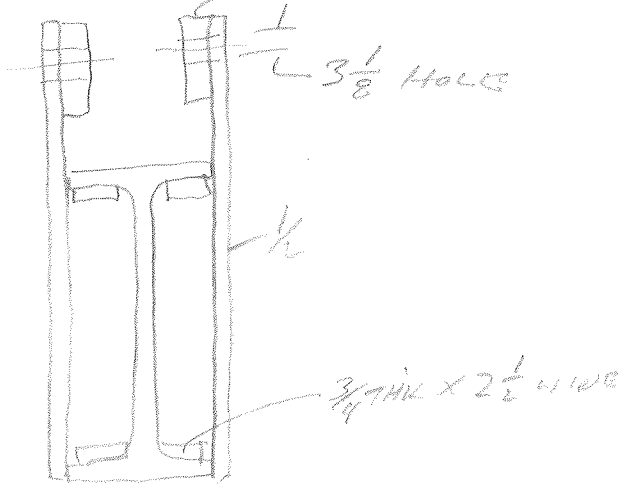

30 TONS ?

1 9/16 DIA = 14 TON CAPACITY

SECTION 9" FROM CENTER

SECTION 30 1/2" FROM CENTER

Field Data

#13

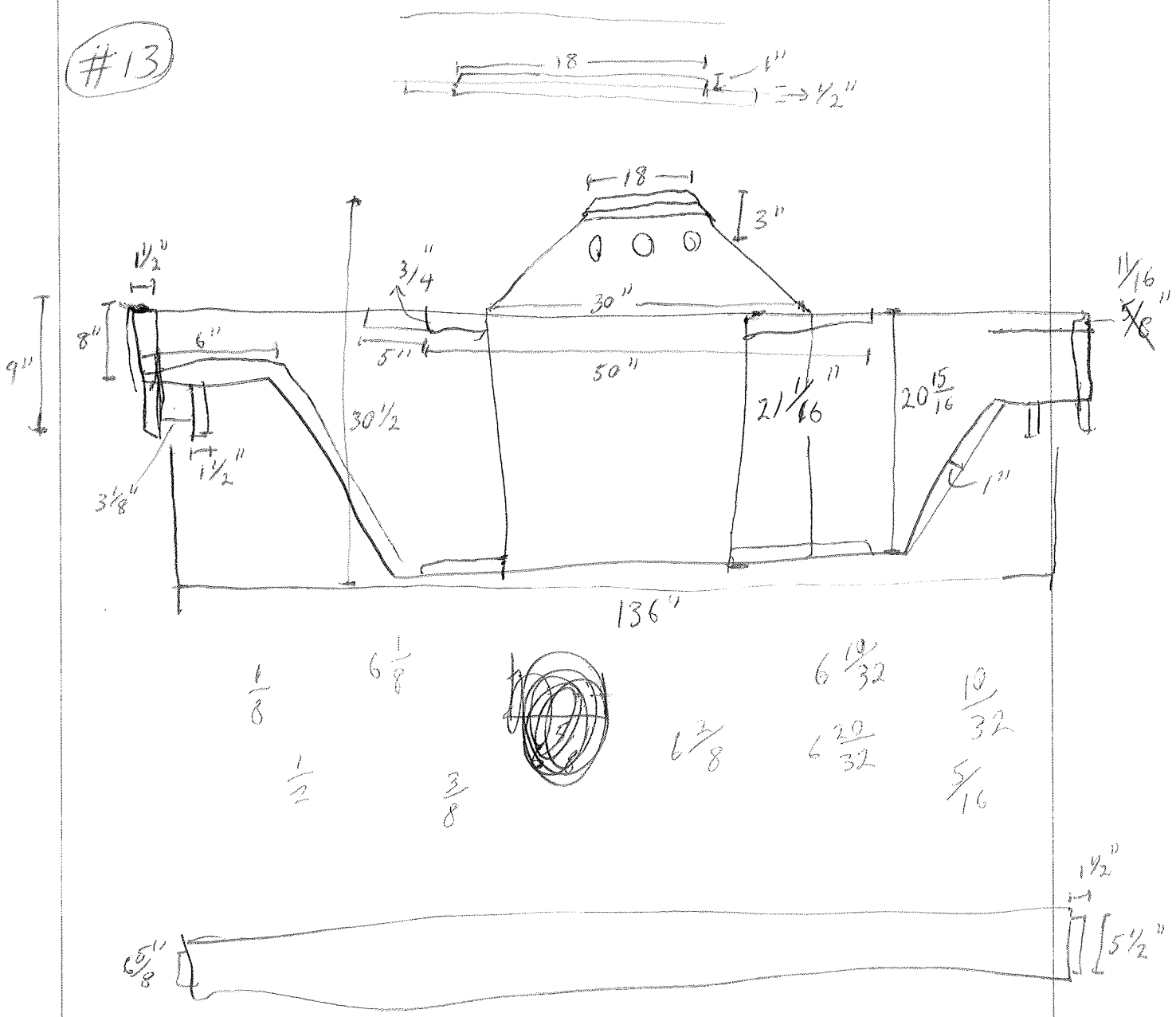

1/8 6 1/8 6 19/32 10/32

1/2 3/8 6 3/8 6 20/32 5/16