SPREADER BAR

I.D. Nº 12 COLOR OF BAR: Yellow

LOAD CAPACITY PAINTED ON BAR _____ TONS.

DATE CAP. & I.D. Nº PAINTED ON BAR _____

DATE OF LAST LOAD TEST. _____

TEST LOAD WEIGHT _____ TONS

TEST LOAD % _____

STRESS CALCULATIONS:

DONE BY Borek + Miranda

DATE July 1988

REMARKS: Capacity was not painted on. Calculations show very high cap (45 ton) & Bar was not tested.

Yellow #12

Top

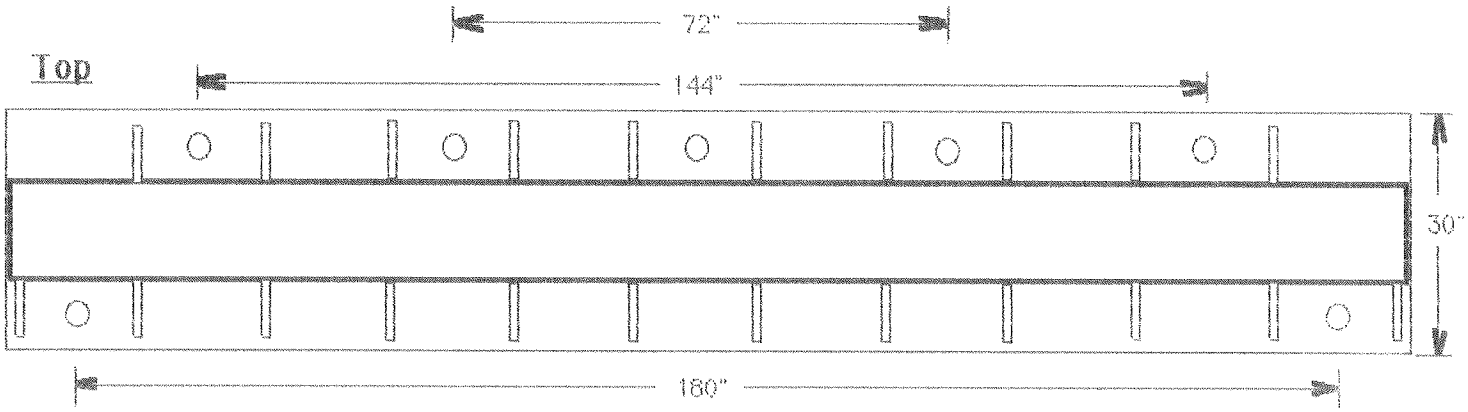

Side

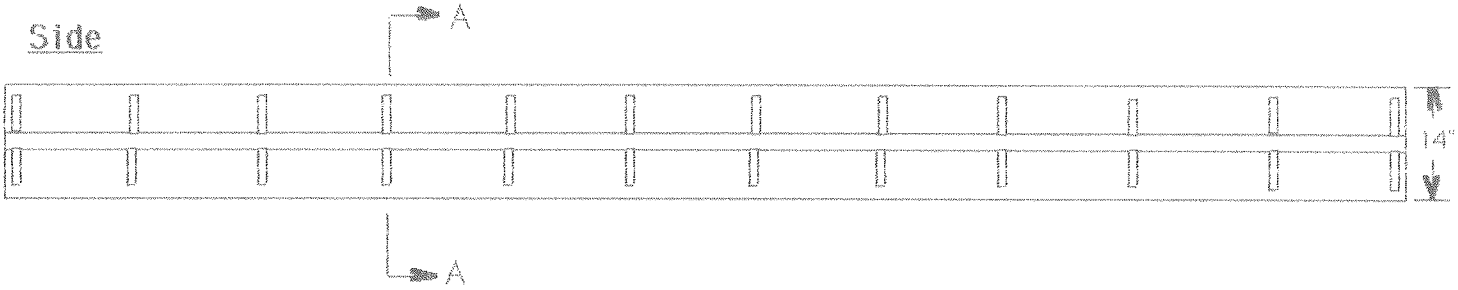

Section AA

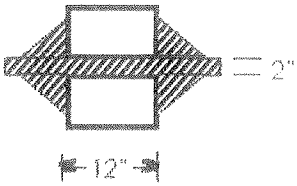

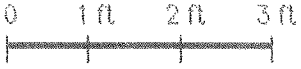

scale: 1/2" = 1'

SPREADER BAR Nº 12 PAINT COLOR Yellow

Basek

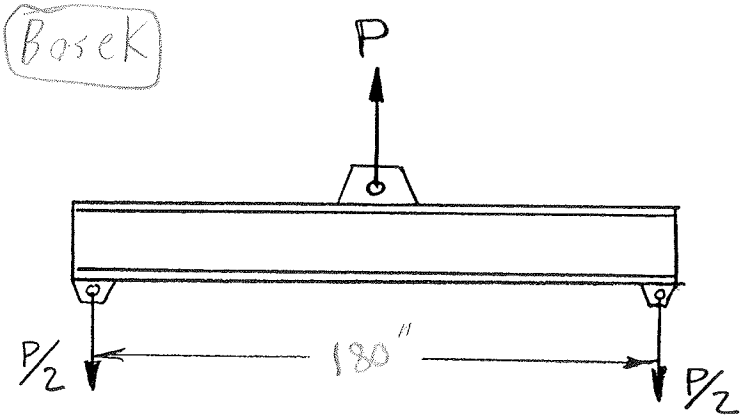

BEAM SIZE SPECIAL

$d =$ 30"

$L =$ 180

$d/A_f =$ _____

$I, S_x =$ 5042 in^4

$t_w =$ _____

$A_w = d \cdot t_w =$ _____

$M = \frac{PL}{4} =$ 45 P

$V = \frac{P}{2}$

BENDING STRESS:

$F_{b\ ALLOW} = 12{,}000$ psi

OR $F_{b\ ALLOW} = \frac{12 \times 10^6}{L \cdot d/A_f} = \frac{12 \times 10^6}{\quad} =$ _____ } USE THE LEAST

$\therefore f_{b\ MAX} = \frac{M}{S_x} = \frac{M \times c}{I} = \frac{45P \times 15}{5042} = 12{,}000$

P = 89636 lb.
= 44.8 TONS

SHEAR STRESS:

$F_{V\ ALLOW} = \frac{.4\ F_y}{3} = 4800$ psi

$\therefore f_{V\ MAX} = \frac{V}{A_w} =$

SUMMARY: $\therefore P =$ _____ TONS

Field Data
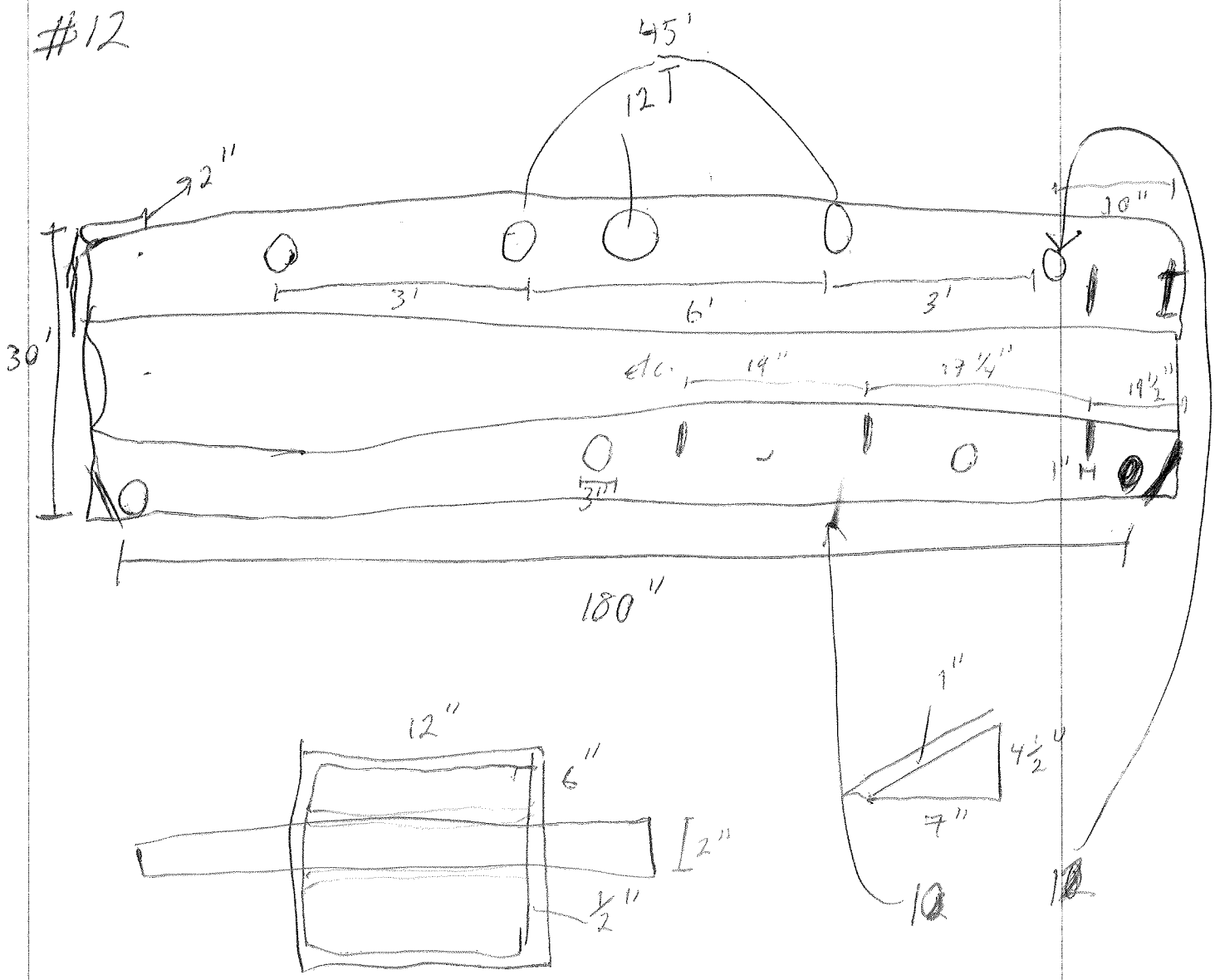
#12