SPREADER BAR

I.D. Nº 9 COLOR OF BAR: Blue

LOAD CAPACITY PAINTED ON BAR _____ TONS.

DATE CAP. & I.D. Nº PAINTED ON BAR _____

DATE OF LAST LOAD TEST. _____

TEST LOAD WEIGHT _____ TONS

TEST LOAD % _____

STRESS CALCULATIONS:

DONE BY Bosek & Miranda

DATE July 1988

REMARKS:

Blue #9

Top

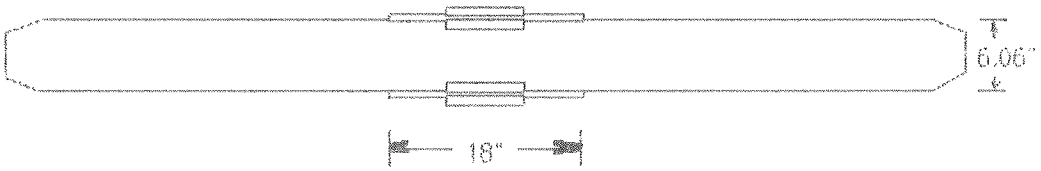

Side

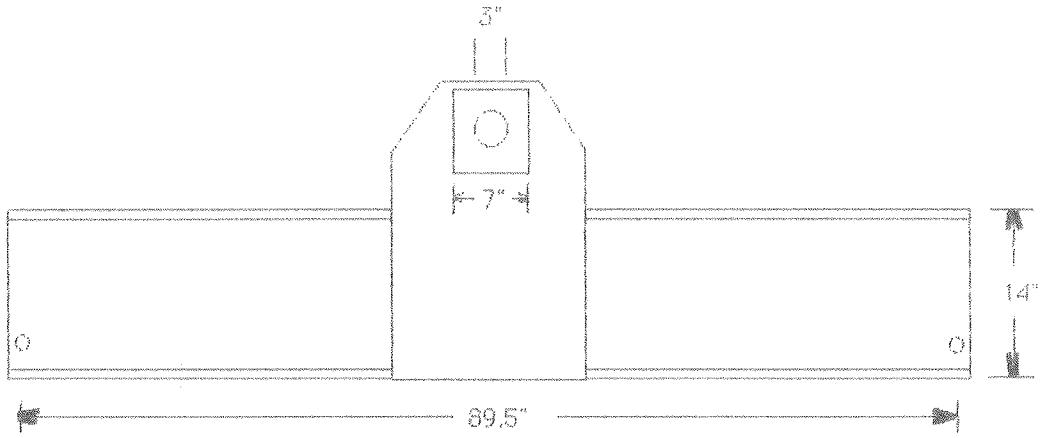

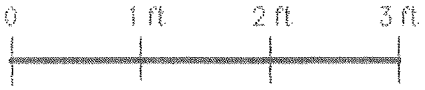

scale: 3/4" = 1'

SPREADER BAR Nº 9 PAINT COLOR Blue

Leon

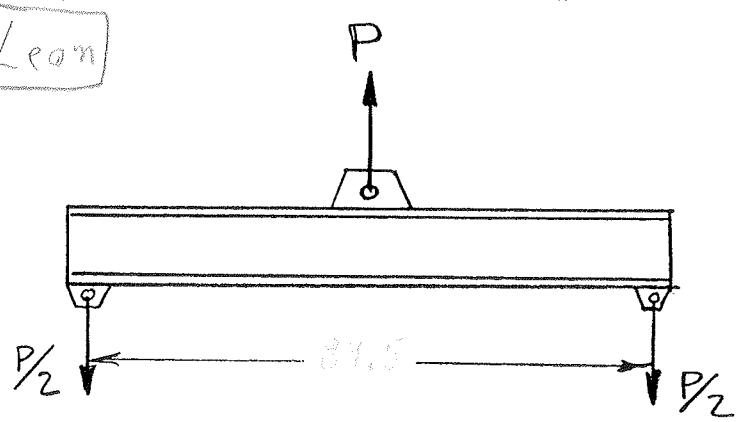

BEAM SIZE SPECIAL

$d =$ 14 in

$L =$ 89.5 in

$d/A_f =$ 3.52

$S_x =$ 51.5 in³

$t_w =$ .48 in

$A_w = d \cdot t_w =$ 6.125 in²

$M = \frac{PL}{4} =$ 22.375P

$V = \frac{P}{2}$

BENDING STRESS:

$F_{b\ ALLOW} = 12{,}000$ psi

OR $F_{b\ ALLOW} = \frac{12 \times 10^6}{L \cdot d/A_f} = \frac{12 \times 10^6}{(89.5)(3.52)} =$ 38,090 psi

USE THE LEAST

$\therefore f_{b\ MAX} = \frac{M}{S_x} = \frac{22.375P}{51.5} = 12{,}000$ $\therefore P = 27{,}620$ lbs = 13.8 tons

SHEAR STRESS:

$F_{V\ ALLOW} = \frac{.4\ F_y}{3} = 4800$ psi

$\therefore f_{V\ MAX} = \frac{V}{A_w} = \frac{P}{2(6.125)} = 4800$ $\therefore P = 58{,}800$ lbs = 29.4 tons

SUMMARY: $\therefore P =$ 13.8 TONS

Field Data

5 I beam

#9

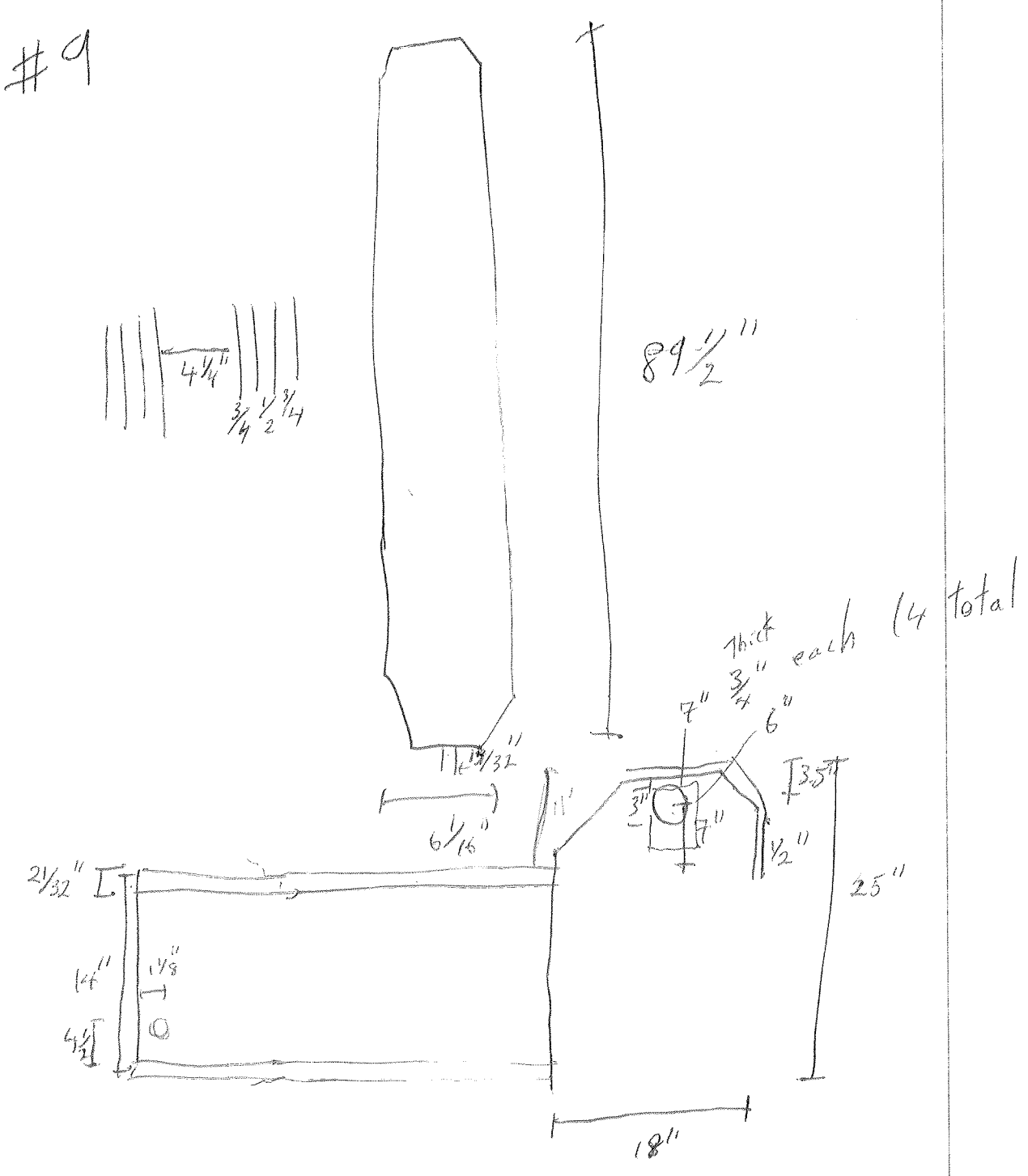

	A	B	C
Areas	3.949	5.55	3.949

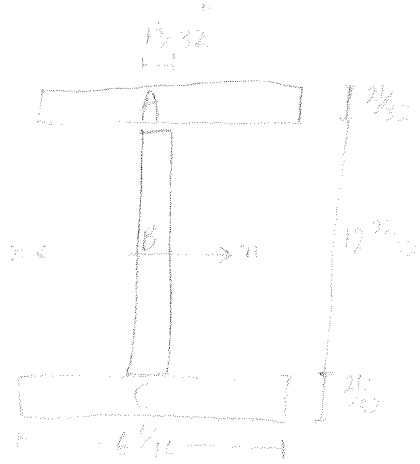

$I_a = \frac{bh^3}{12} = \frac{(6.0625)(.65625)^3}{12} = \underline{.2176\ in^4}$

$I_c = \underline{.2176\ in^4}$

$I_b = \frac{(.9375)(12.0625)^3}{12} = \underline{5.86\ in^4}$

$A_a = A_c = 3.949\ in^2$ $\quad A_b = \underline{5.55\ in^2}$

$r_c = 6.672\ in$ $\quad r_c = 0$ $\quad c = 7$

$I_a + A_a r_a^2 + I_b + I_c + A_c r_c^2$

$= .2176 + (3.949)(6.672)^2 + 5.86 + .2176 + (3.949)(6.672)^2$

$= 360.6$

$= \frac{1}{4} \cdot \frac{360.6}{4} = \boxed{11.5\ in^3}$

$\frac{I}{A_b} = \frac{14}{3.949} = \boxed{3.52\ in^{-1}}$