SPREADER BAR

I.D. Nº 8 COLOR OF BAR: Yellow

LOAD CAPACITY PAINTED ON BAR 5 TONS.

DATE CAP. & I.D. Nº PAINTED ON BAR July 1988

DATE OF LAST LOAD TEST. Aug 9, 1988

TEST LOAD WEIGHT 5.7 TONS LIFTED (2) Q BLOCKS

TEST LOAD % 114%

STRESS CALCULATIONS:

DONE BY Bosek + Miranda

DATE July 1988

REMARKS: Two channels

Yellow #8

Top

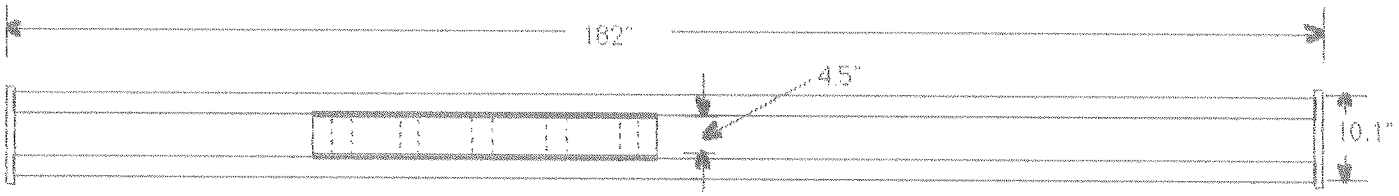

Side

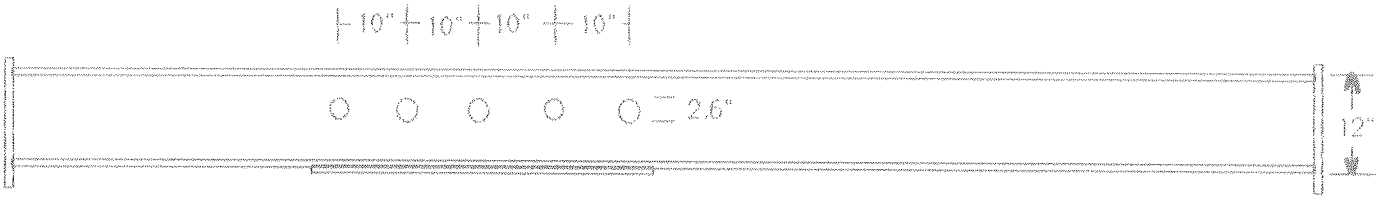

Cross Section

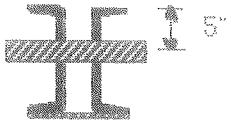

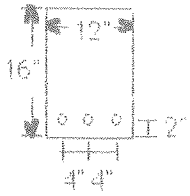

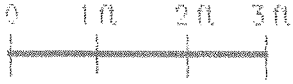

scale: 1/2" = 1'

SPREADER BAR Nº 8 PAINT COLOR Yellow

Lean

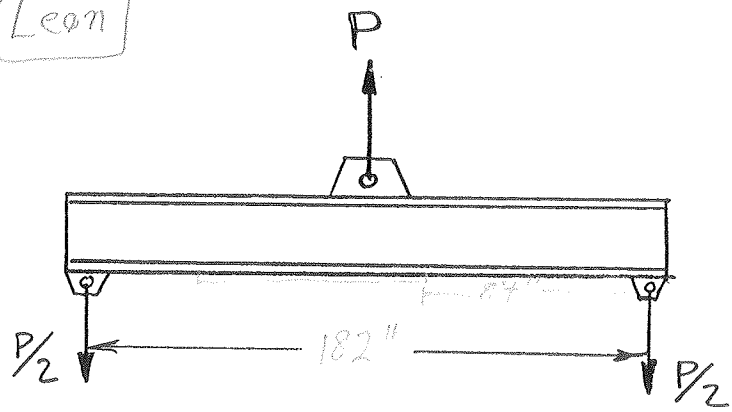

BEAM SIZE C12 X 20.7

$d =$ 12 in

$L =$ 84 in

$d/A_f =$ 8.13 in

$S_x =$ 21.5

$t_w =$ .282 in

$A_w = d \cdot t_w =$ 3.384 in²

$M = \frac{PL}{4} =$ 45.5P

$V = \frac{P}{2}$

BENDING STRESS:

$F_{b\ ALLOW} = 12{,}000$ psi

OR $F_{b\ ALLOW} = \frac{12 \times 10^6}{L \cdot d/A_f} = \frac{12 \times 10^6}{[illegible]} =$ [illegible] psi

USE THE LEAST

$\therefore f_{b\ MAX} = \frac{M}{S_x} = \frac{45.5P}{21.5} = 12{,}000$ $\therefore P =$ [illegible] lbs

$=$ 5.7 tons

SHEAR STRESS:

$F_{V\ ALLOW} = \frac{.4\ F_y}{3} = 4800$ psi

$\therefore f_{V\ MAX} = \frac{V}{A_w} = \frac{P}{2(3.384)} = 4800$ $\therefore P =$ 32,454.32 lbs

$=$ 64,913 lbs

$=$ 32.49 tons

SUMMARY: $\therefore P =$ 5.7 TONS

SPREADER BAR Nº 8	Leon	Paint Color Yellow

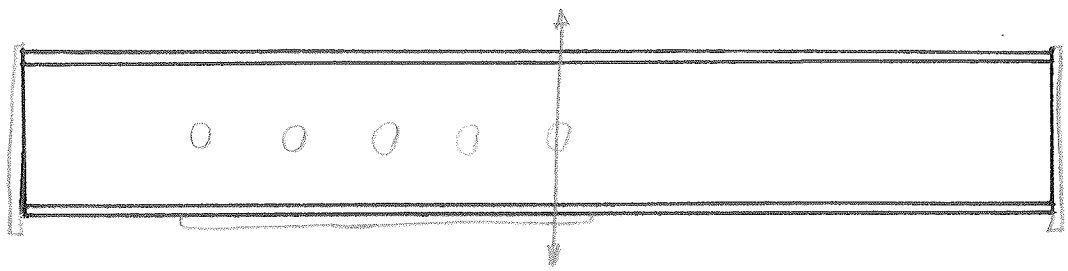

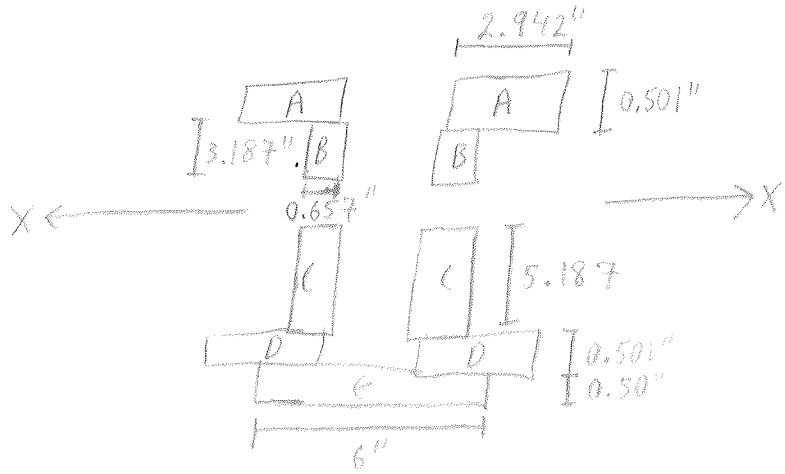

$h = 5.385\ in$

Section	Base (in)	Height (in)	I (in⁴)	Area (in²)	r (in)	r' (in)	Ar'² (in²)
A	5.884	0.501	0.062	2.948	12.25	6.865	138.934
B	1.314	3.187	3.545	4.188	10.406	5.021	105.581
C	1.314	5.187	15.281	6.816	3.595	1.79	21.839
D	5.884	0.501	0.062	2.948	0.751	4.634	63.305
E	6	0.5	0.0625	3	0.25	5.135	79.105

$c = 7.115\ in$

$I_{xx} = 427.777\ in^4$

$S_{xx} = 60.123\ in^3 > 21.5\ in^3$

SPREADER BAR Nº 8 PAINT COLOR YELLOW

Basek

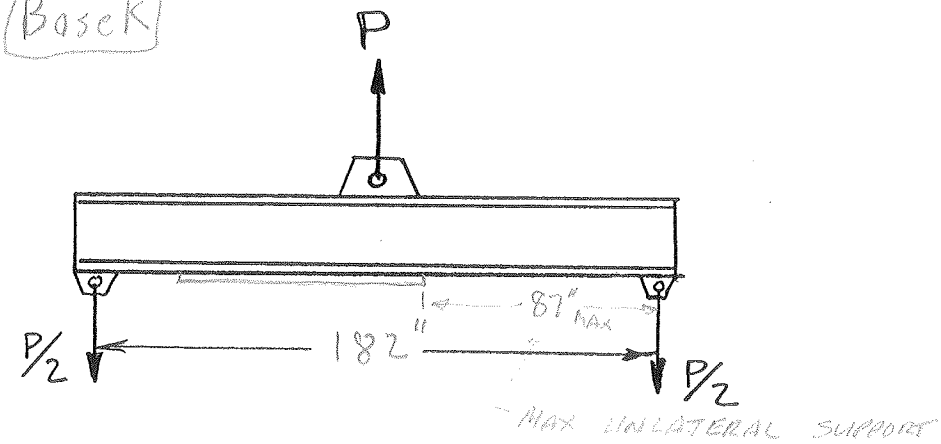

BEAM SIZE PAIR OF CHANNEL C 12 x 20.7

$d = 12.00$ $\quad A_w = d \cdot t_w = 3.384$

$L_1 = 87$ $\quad L_2 = 182$

$d/A_f = 8.13$ $\quad M = \frac{PL_2}{4} = 45.5P$

$S_x = 21.5$

$t_w = .282$ $\quad V = \frac{P}{2}$

BENDING STRESS:

$F_{b\ ALLOW} = 12{,}000$ psi

OR $F_{b\ ALLOW} = \frac{12 \times 10^6}{L_1 \cdot d/A_f} = \frac{12 \times 10^6}{87 \times 8.13} = 16{,}966$ psi

USE THE LEAST

$\therefore f_{b\ MAX} = \frac{M}{S_x} = \frac{45.5P}{21.5} = 12000$ $\quad P = 5670$ LBS. x 2

$P = 5.67$ TONS

SHEAR STRESS:

$F_{V\ ALLOW} = \frac{.4\ F_y}{3} = 4800$ psi

$\therefore f_{V\ MAX} = \frac{V}{A_w} = \frac{P}{2 \times 3.384} = 4800$ $\quad P = 32486$ lbs

SUMMARY: $\therefore P = 5.67$ TONS

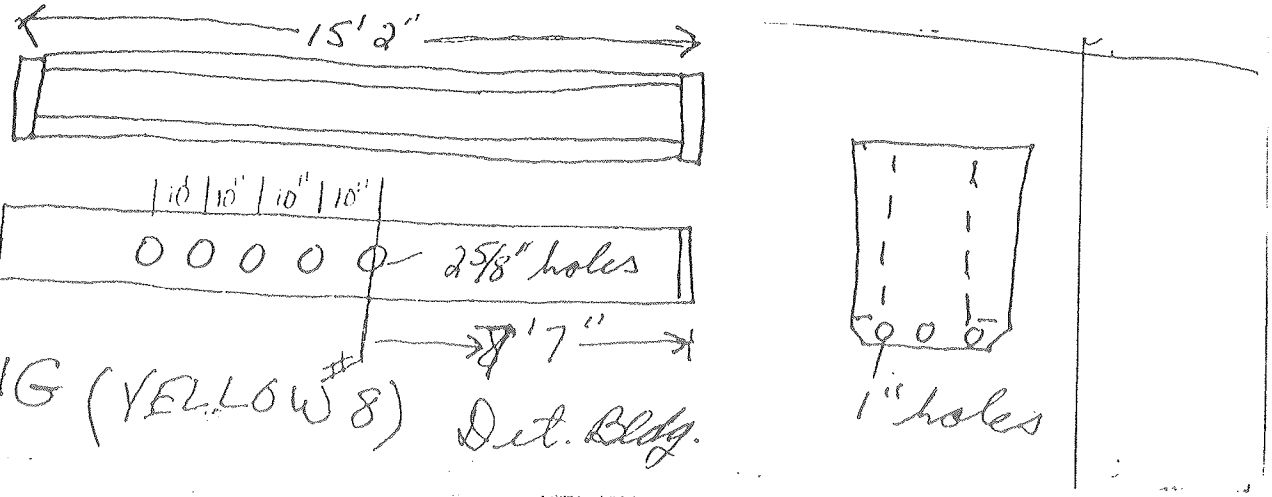

X

NO RATING (YELLOW #8) Det. Bldg.

Field Data

#8
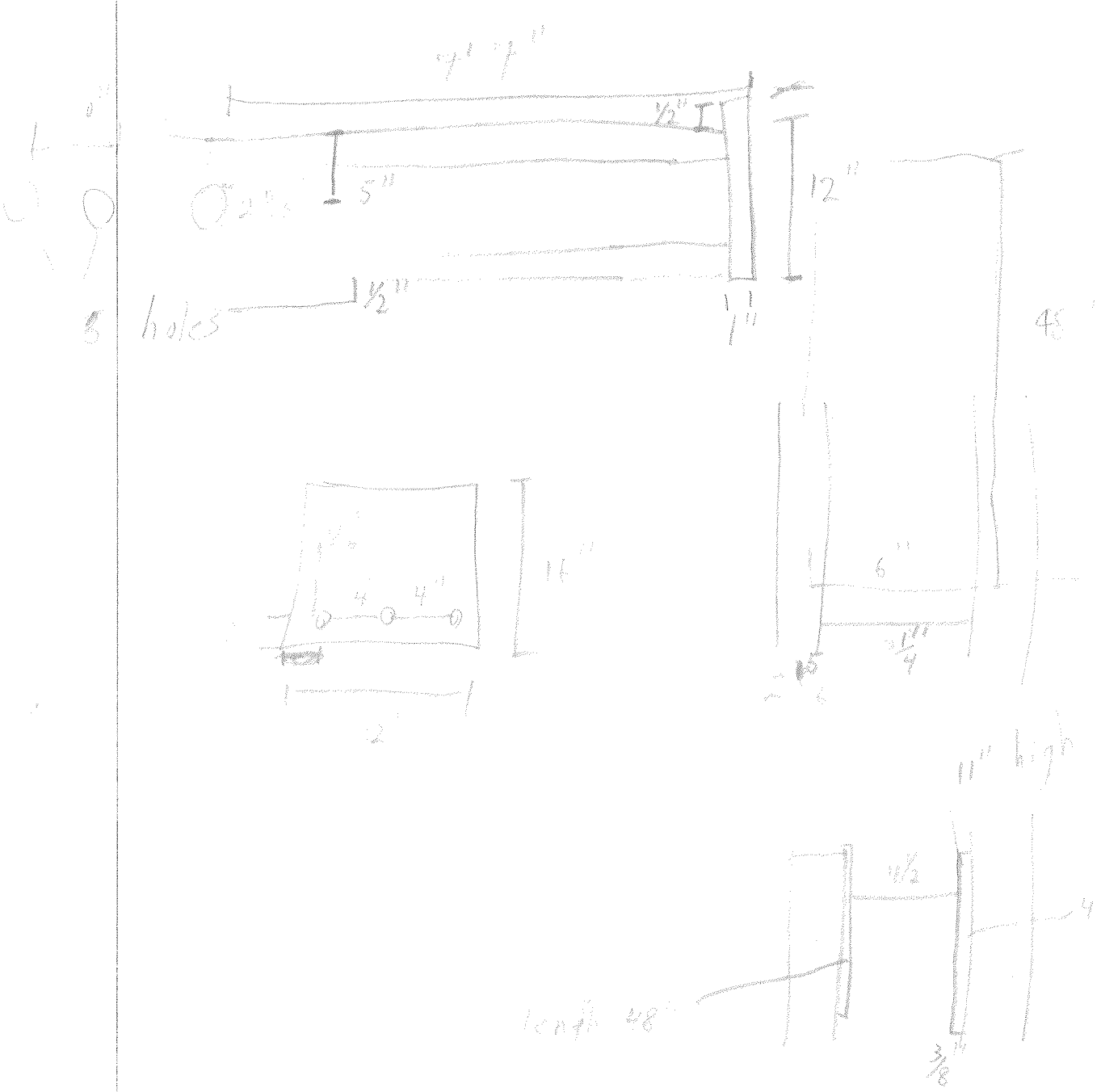
pin is 2½" diameter