SPREADER BAR

I.D. Nº 6 COLOR OF BAR: Yellow

LOAD CAPACITY PAINTED ON BAR 8 TONS.

DATE CAP. & I.D. Nº PAINTED ON BAR July 1980

DATE OF LAST LOAD TEST. _____

TEST LOAD WEIGHT 20200 ~~TONS~~ LBS. (USE 4 "A" BLOCKS)

TEST LOAD % 126%

STRESS CALCULATIONS:

DONE BY Bosek + Miranda

DATE June 1988

REMARKS:

Yellow #6

8 ton painted

Top

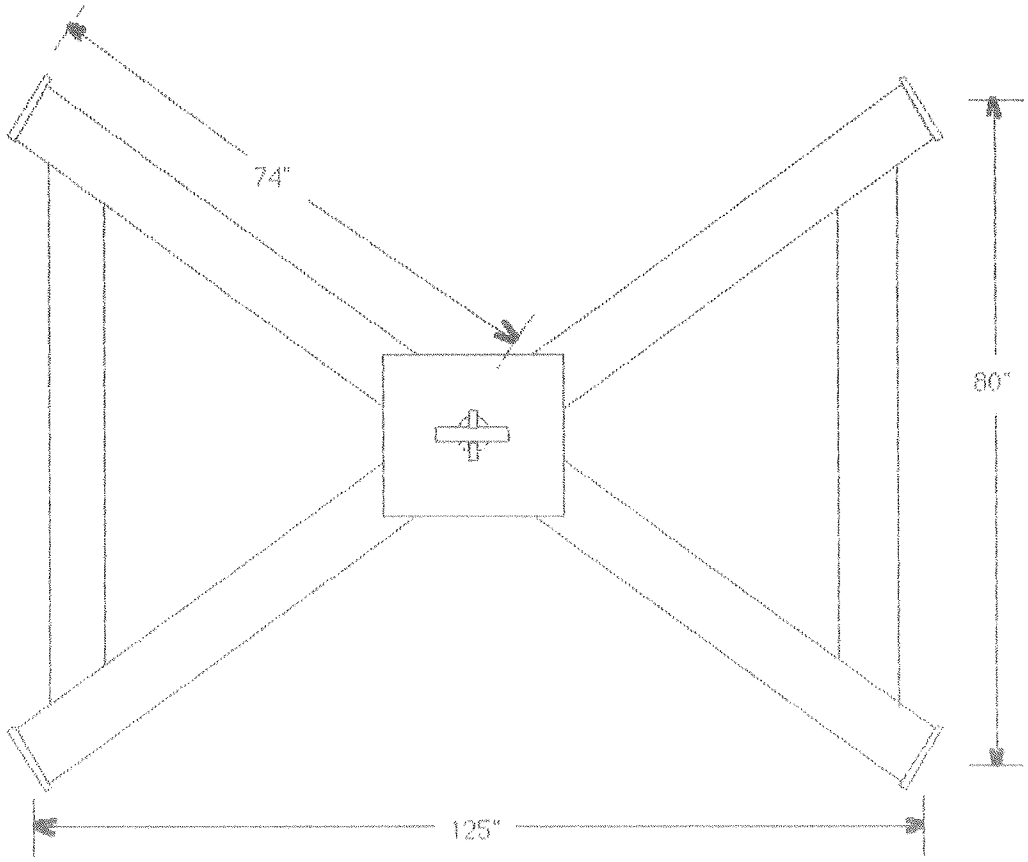

Side

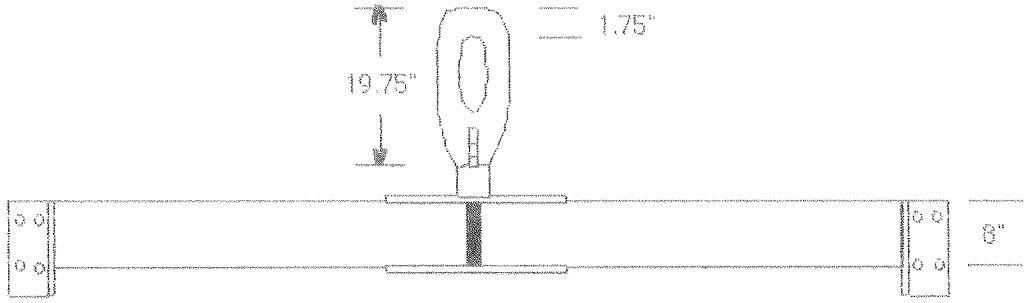

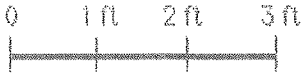

scale: 1/2" = 1'

SPREADER BAR Nº 6 PAINT COLOR YELLOW

BoseK

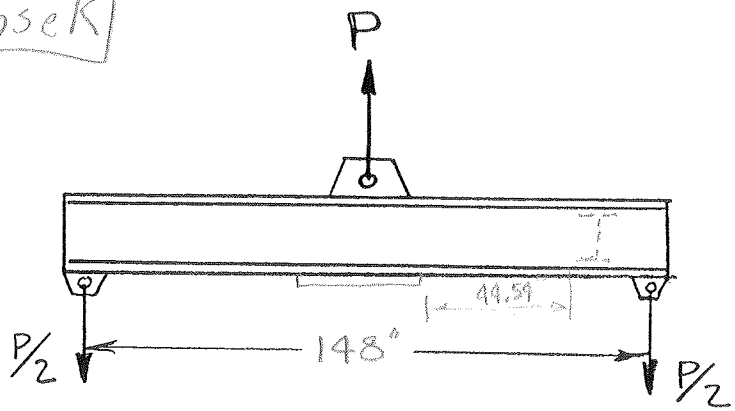

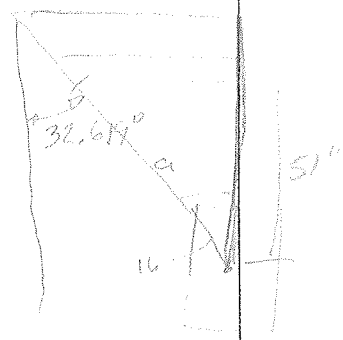

$\frac{51}{a} = \cos 32.6$

$a = 60.85$

-16

$44.59"$

BEAM SIZE W8 x 31

$d = 8$

$L_1 = 44.59"$ $L_2 = 148"$

$d/A_f = 2.31$

$S_x = 27.4$

$t_w = .288$

$A_w = d \cdot t_w = 2.304$

$M = \frac{PL_2}{4} = 37P$

$V = \frac{P}{2}$

BENDING STRESS:

$F_{b\ ALLOW} = 12{,}000$ psi

OR $F_{b\ ALLOW} = \frac{12 \times 10^6}{L_1 \cdot d/A_f} = \frac{12 \times 10^6}{44.59 \times 2.31} = 116{,}502$ psi

USE THE LEAST

$\therefore f_{b\ MAX} = \frac{M}{S_x} = \frac{37P}{27.4} = 12{,}000$ $P = 8886$ LBS

PAIR OF BEAMS = 8.88 TONS

SHEAR STRESS:

$F_{V\ ALLOW} = \frac{.4\ F_y}{3} = 4800$ psi

$\therefore f_{V\ MAX} = \frac{V}{A_w} = \frac{P}{2 \times 2.304} = 4800$ $P = 22118$ LBS

PAIR OF BEAMS = 22.1 TONS

SUMMARY: $\therefore P = 8.88$ TONS

SPREADER BAR Nº _____ PAINT COLOR Yellow

Leon

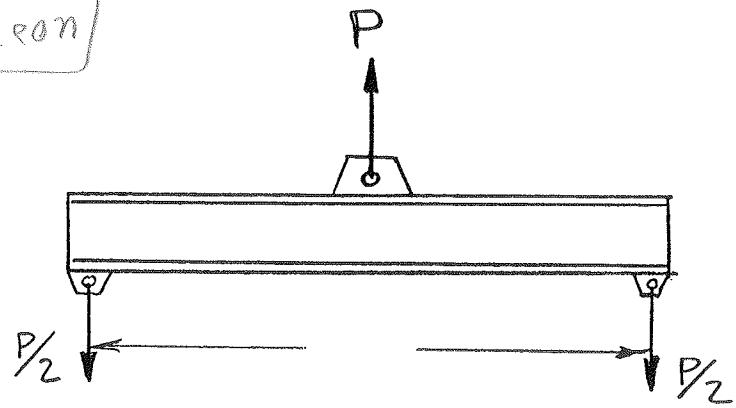

BEAM SIZE _____

$d =$ _____ $\qquad A_w = d \cdot t_w =$ _____

$L =$ _____

$d/A_f =$ _____ $\qquad M = \frac{PL}{4} =$ _____

$S_x =$ _____

$t_w =$ _____ $\qquad V = \frac{P}{2}$

BENDING STRESS:

$F_{b\ ALLOW} = 12{,}000$ psi

OR $F_{b\ ALLOW} = \frac{12 \times 10^6}{L \cdot d/A_f} = \frac{12 \times 10^6}{\quad} =$ _____ } USE THE LEAST

$\therefore f_{b\ MAX} = \frac{M}{S_x} =$

SHEAR STRESS:

$F_{V\ ALLOW} = \frac{.4\ F_y}{3} = 4800$ psi

$\therefore f_{V\ MAX} = \frac{V}{A_w} =$

SUMMARY: $\therefore P =$ 8.88 TONS

Field Data

#6

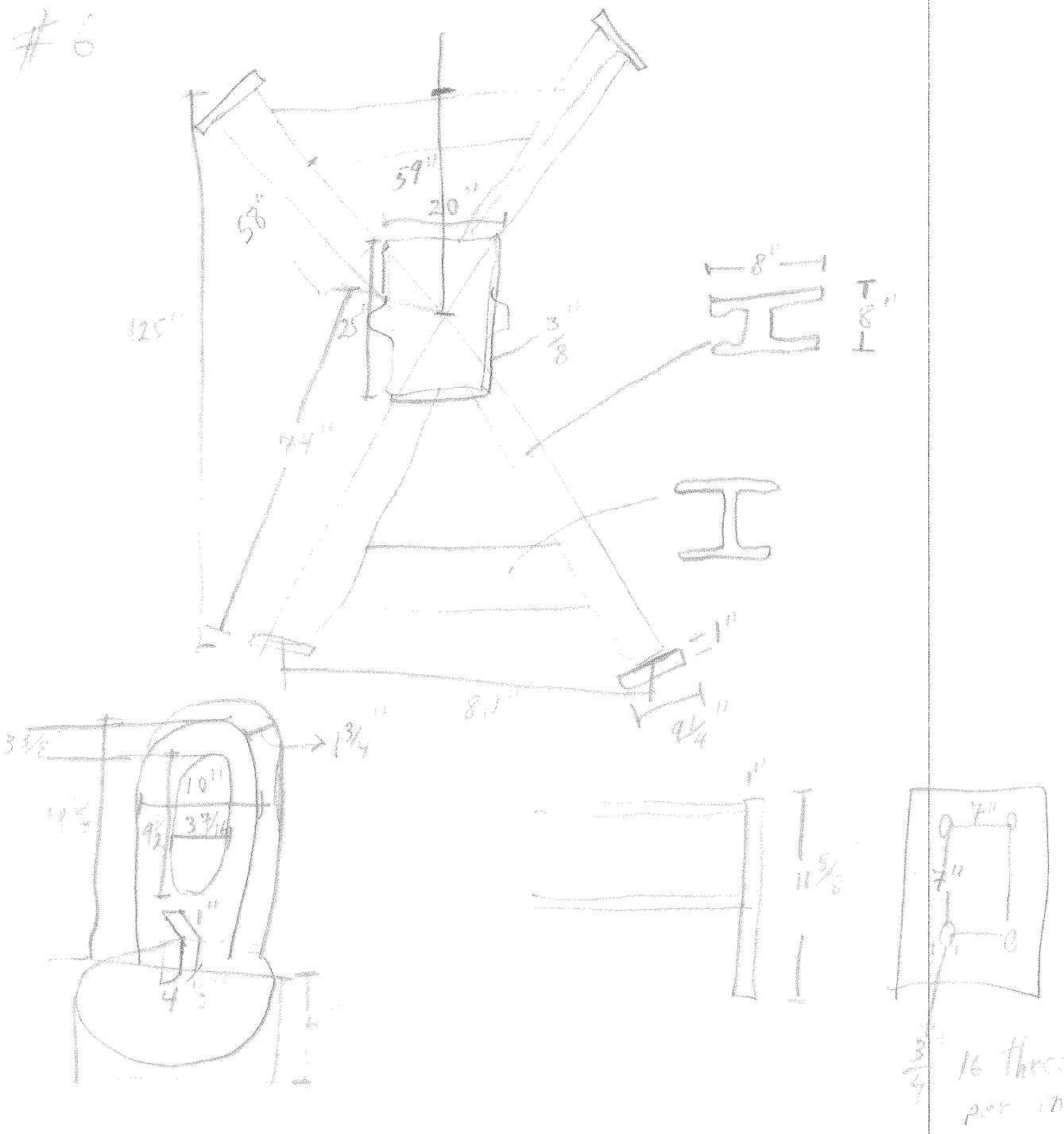

59"
20"
58"
125"
25"
3/8"
74"
8"
8"
1"
81"
9 1/4"
3 3/8
1 3/4"
10"
3 7/16
9 1/2
1"
4
1"
11 5/8
7"
7"
3/4"
16 thread per inch