SPREADER BAR

I.D. Nº 4 COLOR OF BAR: Yellow

LOAD CAPACITY PAINTED ON BAR 22 TONS.

DATE CAP. & I.D. Nº PAINTED ON BAR _____

DATE OF LAST LOAD TEST. _____

TEST LOAD WEIGHT _____ TONS

TEST LOAD % _____

STRESS CALCULATIONS:

DONE BY Bosek + Miranda

DATE June 1988

REMARKS: Bar was not tested - calculations showed capacity of 57 tons. Bar had 22 ton capacity painted on.

YELLOW # 4

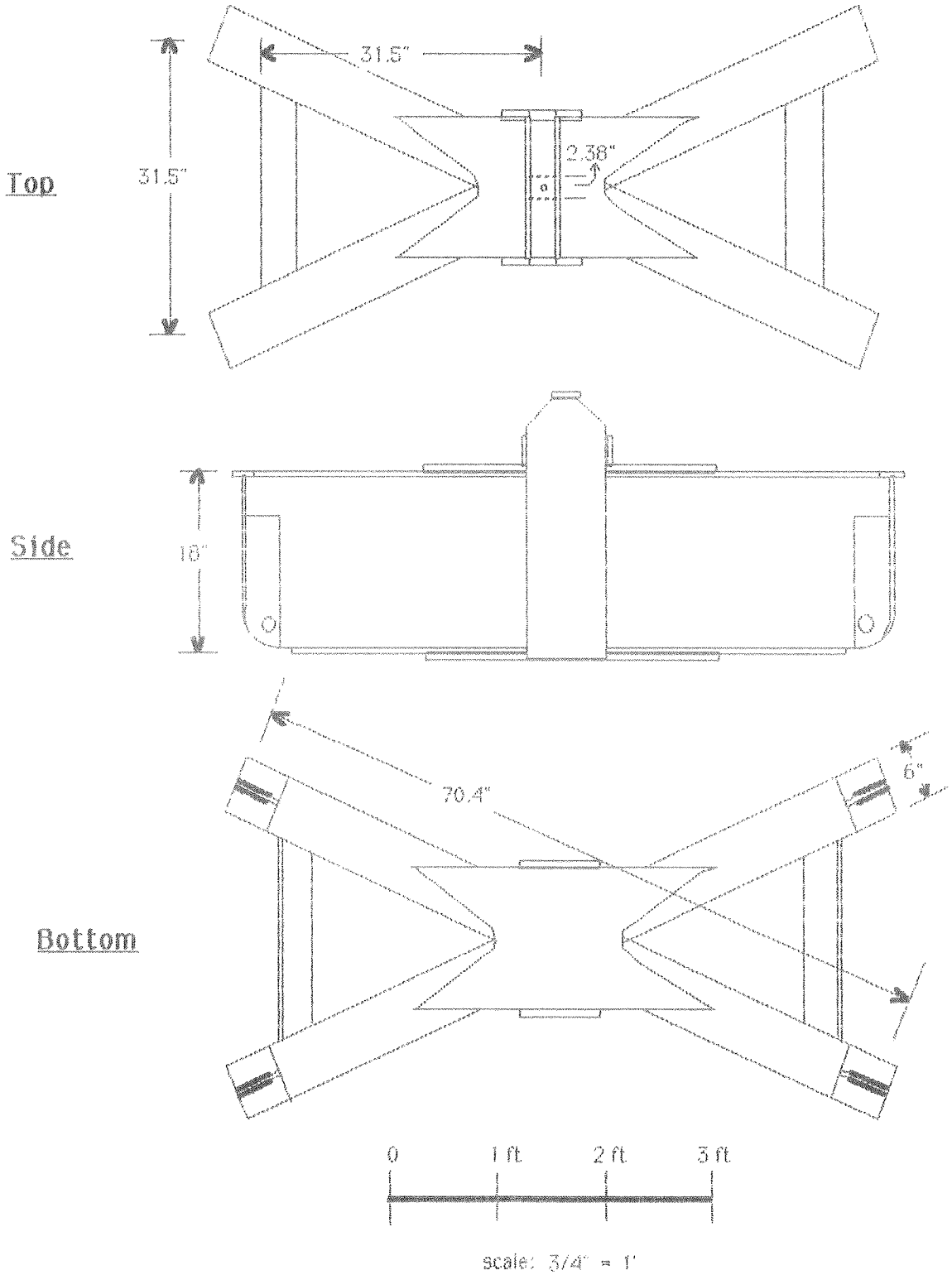

SPREADER BAR Nº 4 PAINT COLOR Yellow

Leon

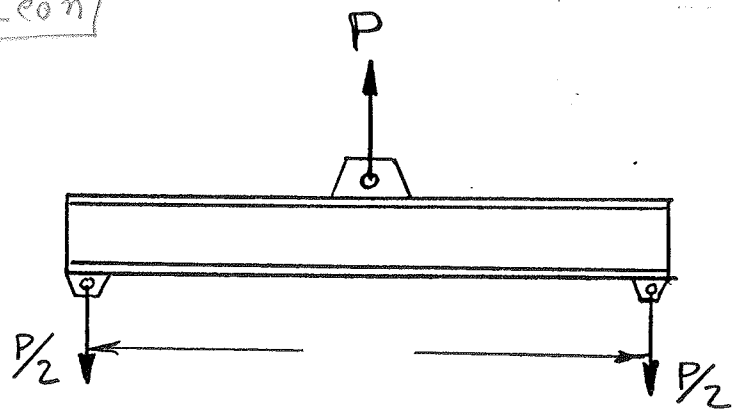

BEAM SIZE S18 X 54.7

$d =$ 18 in

$L =$ 75 in

$d/A_f =$ 4.34

$S_x =$ 89.4 in³

$t_w =$ [illegible]

$A_w = d \cdot t_w =$ [illegible]

$M = \frac{PL}{4} =$ 16,700

$V = \frac{P}{2}$

BENDING STRESS:

$F_{b\ ALLOW} = 12{,}000$ psi

OR $F_{b\ ALLOW} = \frac{12 \times 10^6}{L \cdot d/A_f} = \frac{12 \times 10^6}{(75)(4.34)} =$ [illegible]

} USE THE LEAST

$\therefore f_{b\ MAX} = \frac{M}{S_x} = \frac{16{,}700}{89.4} = 12{,}000$

SHEAR STRESS:

$F_{V\ ALLOW} = \frac{.4\ F_y}{3} = 4800$ psi

$\therefore f_{V\ MAX} = \frac{V}{A_w} = \frac{P}{2A_w} = \frac{P}{2(8.298)} = 4800$

$\therefore P = 79{,}670$ lb

$= 39.8$ tons $\times 2$

$= 79.6$ tons

SUMMARY: $\therefore P =$ 57.2 TONS

SPREADER BAR Nº 4 PAINT COLOR YELLOW

Bosek

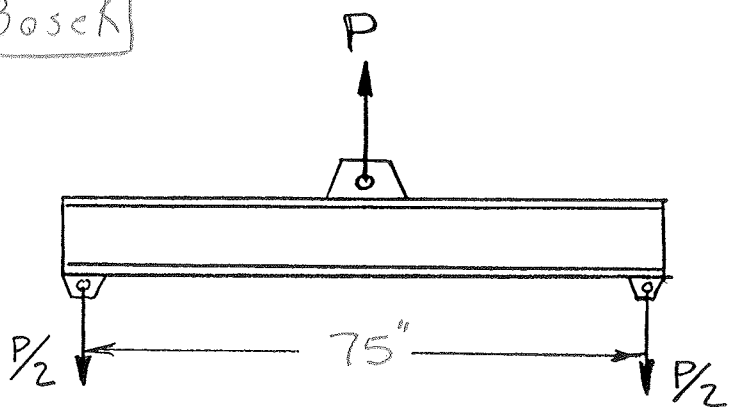

WHY 44,000 LBS?

BEAM SIZE S18 x 54.7

$d = 18$

$L = 75$

$d/A_f = 4.34$

$S_x = 89.4$

$t_w = .461$

$A_w = d \cdot t_w = 8.298$

$M = \frac{PL}{4} = 18.75\,P$

$V = \frac{P}{2}$

BENDING STRESS:

$F_{b\ ALLOW} = 12{,}000$ psi

OR $F_{b\ ALLOW} = \frac{12 \times 10^6}{L \cdot d/A_f} = \frac{12 \times 10^6}{75 \times 4.34} = 36{,}866$ psi

USE THE LEAST

$\therefore f_{b\ MAX} = \frac{M}{S_x} = \frac{18.75P}{89.4} = 12000$ P = 57216 lbs = 28.6 TONS

SHEAR STRESS:

$F_{V\ ALLOW} = \frac{.4\,F_y}{3} = 4800$ psi

$\therefore f_{V\ MAX} = \frac{V}{A_w} = \frac{P}{2 \times 8.298} = 4800$ P = 76661 lbs. = 39.83 TON.

SUMMARY: $\therefore P =$ 57.2 TONS

P = 28.6 x 2 PAIR OF BEAMS

Field Data

44,000
(YELLOW #4)
Dil. Bldg.

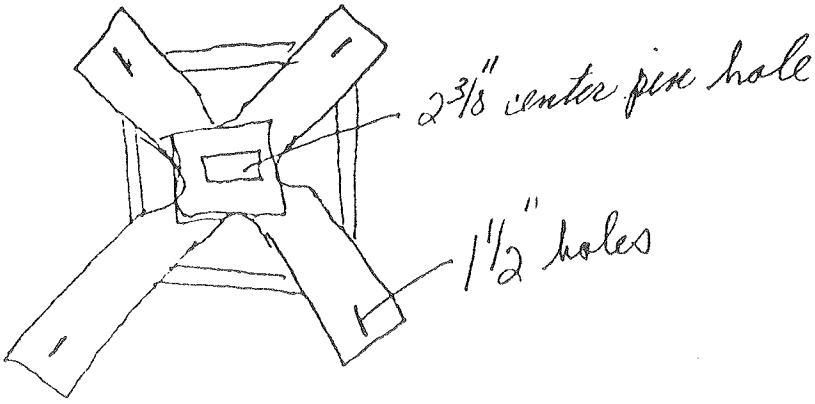

Field Data

#4

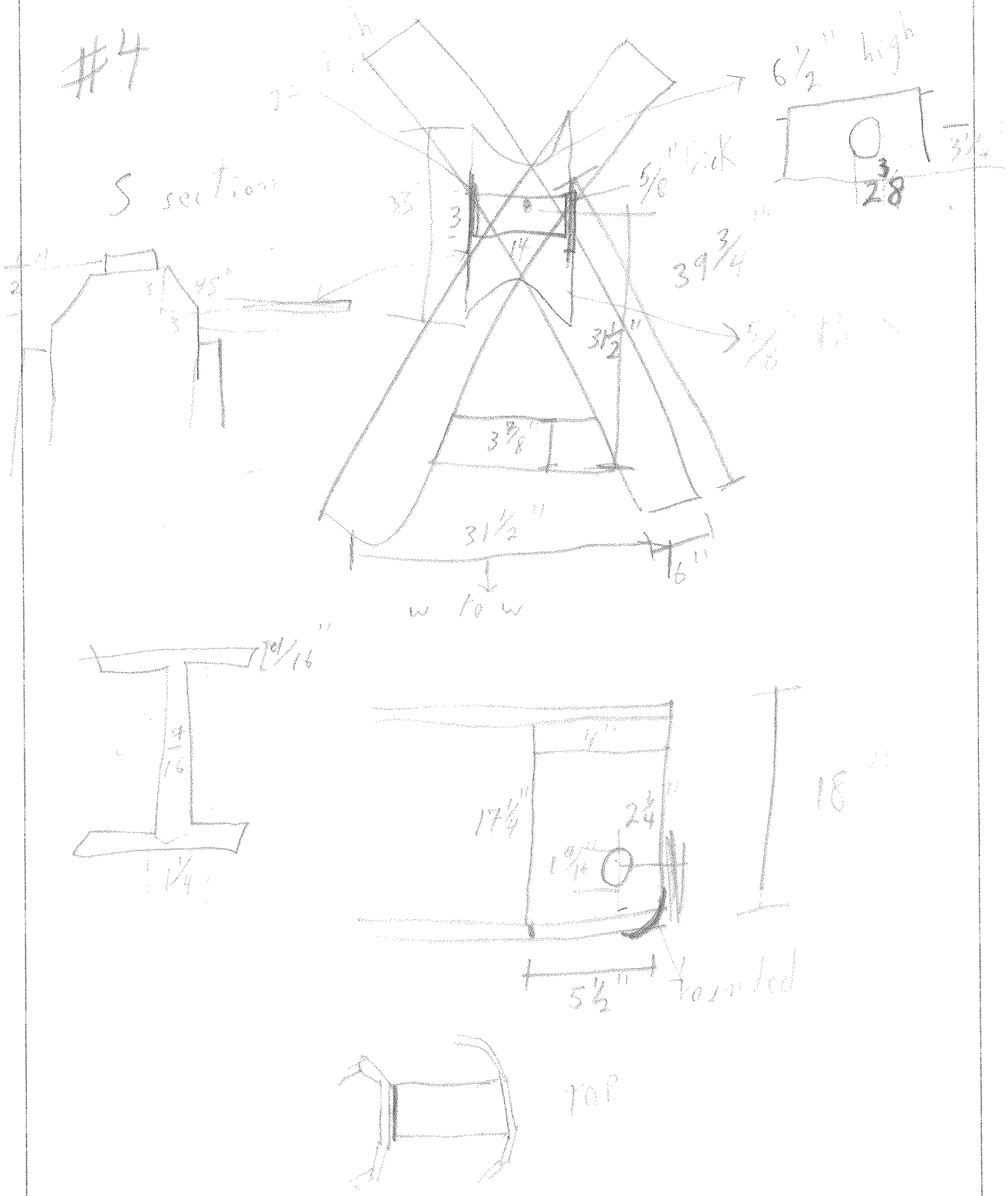

S section
6 1/2" high
5/8" thick
39 3/4"
31 1/2"
3 7/8"
31 1/2"
6"
w to w
4"
17 1/4"
2 1/4"
18"
5 1/2"
rounded
TOP