SPREADER BAR

I.D. Nº 3 COLOR OF BAR: ALUMINUM

LOAD CAPACITY PAINTED ON BAR 1100 ~~TONS~~. LBS

DATE CAP. & I.D. Nº PAINTED ON BAR 3-1-89

DATE OF LAST LOAD TEST. 3-10-89

TEST LOAD WEIGHT 1400 ~~TONS~~ LBS (2) 6" BLOCKS

TEST LOAD % 127%

STRESS CALCULATIONS:

DONE BY N. BOVEK

DATE 2-27-89

REMARKS:

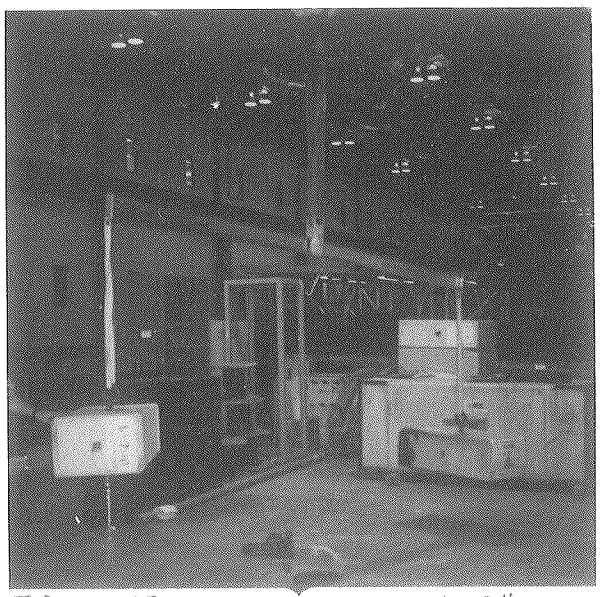

I.D. # 3 LOAD: 1,400#
TWO-"L"- BLOCKS RATING: 1,100# 127%
CHARLES PAUL
#6801 3/10/89

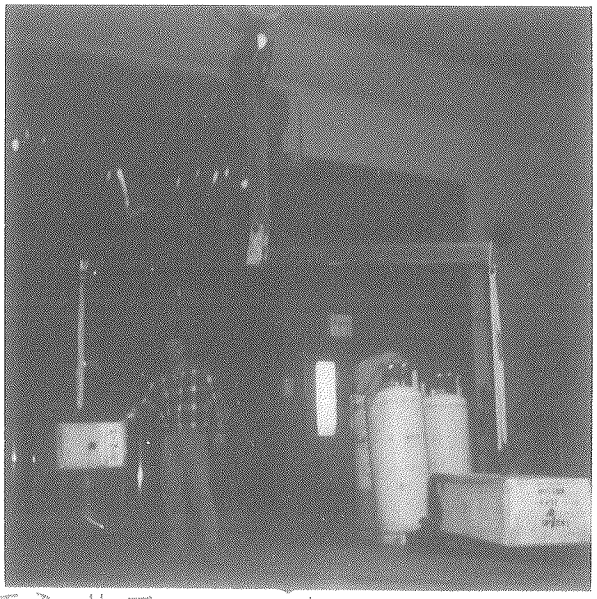

I.D. # 3 LOAD: 1,400#
TWO-"L"- BLOCKS RATING: 1,100# 127%
CHARLES PAUL
#6801 3/10/89

N. BOSEK 2-27-99

SPREADER BAR Nº 3 PAINT COLOR ALUMINUM

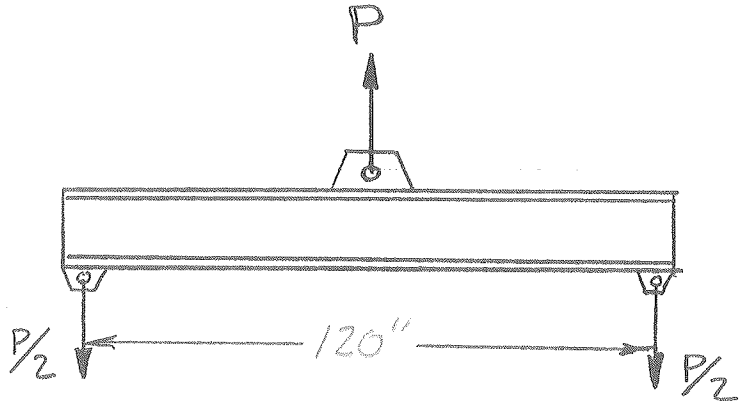

BEAM SIZE ALUMINUM 4"h x 3"w. x 2.79 lb/ft.

$d = 4.00''$ $A_w = d \cdot t_w = .68$

$L = 120''$

$d/A_f = 5.13$ $M = \frac{PL}{4} = 30P$

$S_x = 3.04$

$t_w = .17$ $V = \frac{P}{2}$

BENDING STRESS:

$F_{b\ ALLOW} = 12{,}000$ psi

OR $F_{b\ ALLOW} = \frac{12 \times 10^6}{L \cdot d/A_f} = \frac{12 \times 10^6}{120 \times 5.13} = 19493$ psi } USE THE LEAST

$\therefore f_{b\ MAX} = \frac{M}{S_x} = 12{,}000 = \frac{30P}{3.04}$ $P = 1216$ lb.

SHEAR STRESS:

$F_{v\ ALLOW} = \frac{.4\ F_y}{3} = 4800$ psi

$\therefore f_{v\ MAX} = \frac{V}{A_w} = 4800 = \frac{P}{2 \times .68}$ $P = 6528$ lb.

SUMMARY: $\therefore P = 1216$ LBS. ~~TONS~~