## LIFTING DEVICE

DEVICE NAME: LIFTING BAR, HUGHLAB # HLD7

ENGINEERING NOTE NUMBER: 48

DRAWING NUMBER: NO DRAWING AVAILABLE

APPLICABLE STANDARD: BELOW THE HOOK LIFTING DEVICES ANSI/ASME B30.20-1985

RATED LOAD: 1,640 #

TEST LOAD: 2050 #

TEST LOAD PERCENT: 1.25

LAST LOAD TEST DATE:

COLOR: YELLOW

STRESS CALCULATIONS:

Done by: E. M. Dolly

Date: 6/8/92

Reviewed by: [illegible]

Date: 7/1/92

REMARKS:

IDENTIFICATION:

Engineering Note Number & Rated Load Must be Clearly Marked On a Conspicuous Surface.

FERMILAB
# ENGINEERING NOTE

| SECTION | PROJECT | SERIAL-CATEGORY | PAGE |
|---|---|---|---|
| | | | |

SUBJECT: LIFTING BAR MLD7 MUON LAB PCN & PCB RD/MECH DEPT

NAME: E.M. Villegas

DATE: 6/8/92

REVISION DATE:

$1.25P$ = TEST LOAD (#)

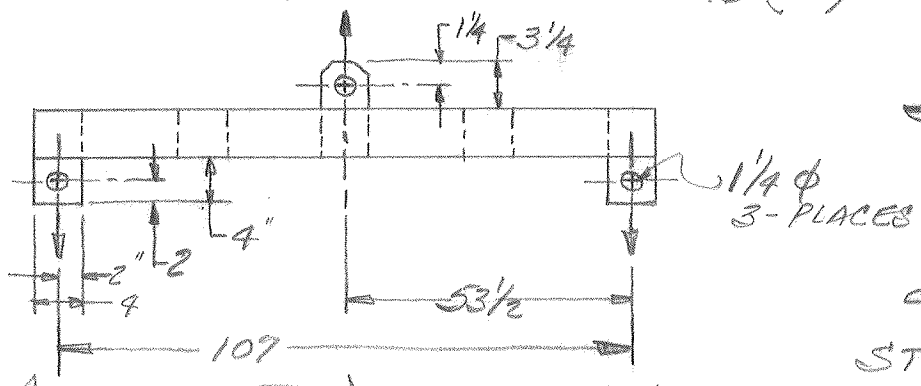


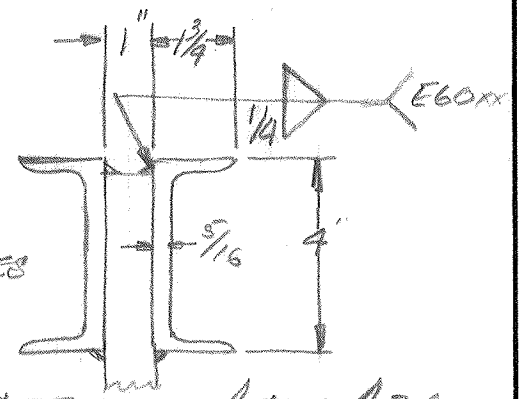


STEEL = ASTM A36

$F_y = 36 \times 10^3$ psi

$A = 2 \times 2.13$

$I_x = 2 \times 4.59$

ACCORDING TO 'BELOW THE HOOK LIFTING DEVICES ANSI/ASME B30.20-1985, SECT. 20-1.2.2'

$F_v = F_b = \frac{F_y}{3} = 12 \times 10^3$ psi ALLOWED

ALSO:

$M = 58.5\left(\frac{1.25P}{2}\right) = 26.75(1.25P)$

&

$F_b = \frac{Mc}{I} = \frac{26.75(1.25P)2}{2 \times 4.59} = 12 \times 10^3$

THEN:

$1.25P = 2059$ # ~~say~~ 2050 # TEST LOAD

& $P = 1,640$ # RATED LOAD

$\therefore f_v = \frac{2050}{2 \times 2 \times 2.13} = 241$ psi $< F_v$

SHEAR @ LIFTING HOLE:

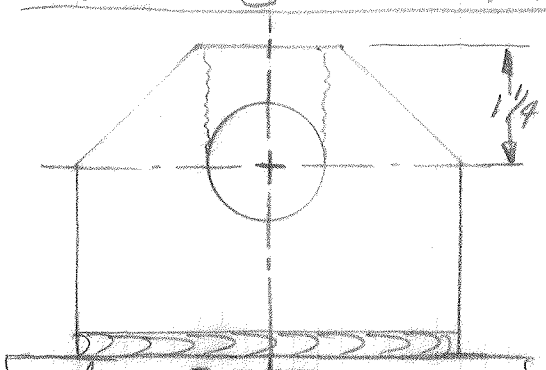


$f_v = \frac{2050}{2 \times 1.25} = 820 < F_v$

WELDS

WELD METAL E60xx

$F_y = 50 \times 10^3$ psi

THEN $F_v = \frac{.707 \times .250 \times 50 \times 10^3}{3}$

$= 2,946$ #/in ALLOWED

& $f_v = \frac{2050}{4 \times .250}$

$= 2050$ #/in DESIGN

540280

MOON LAB
# HLD7
PCN & PCB LIFTS BAR

CAP ON BAR 1250 #

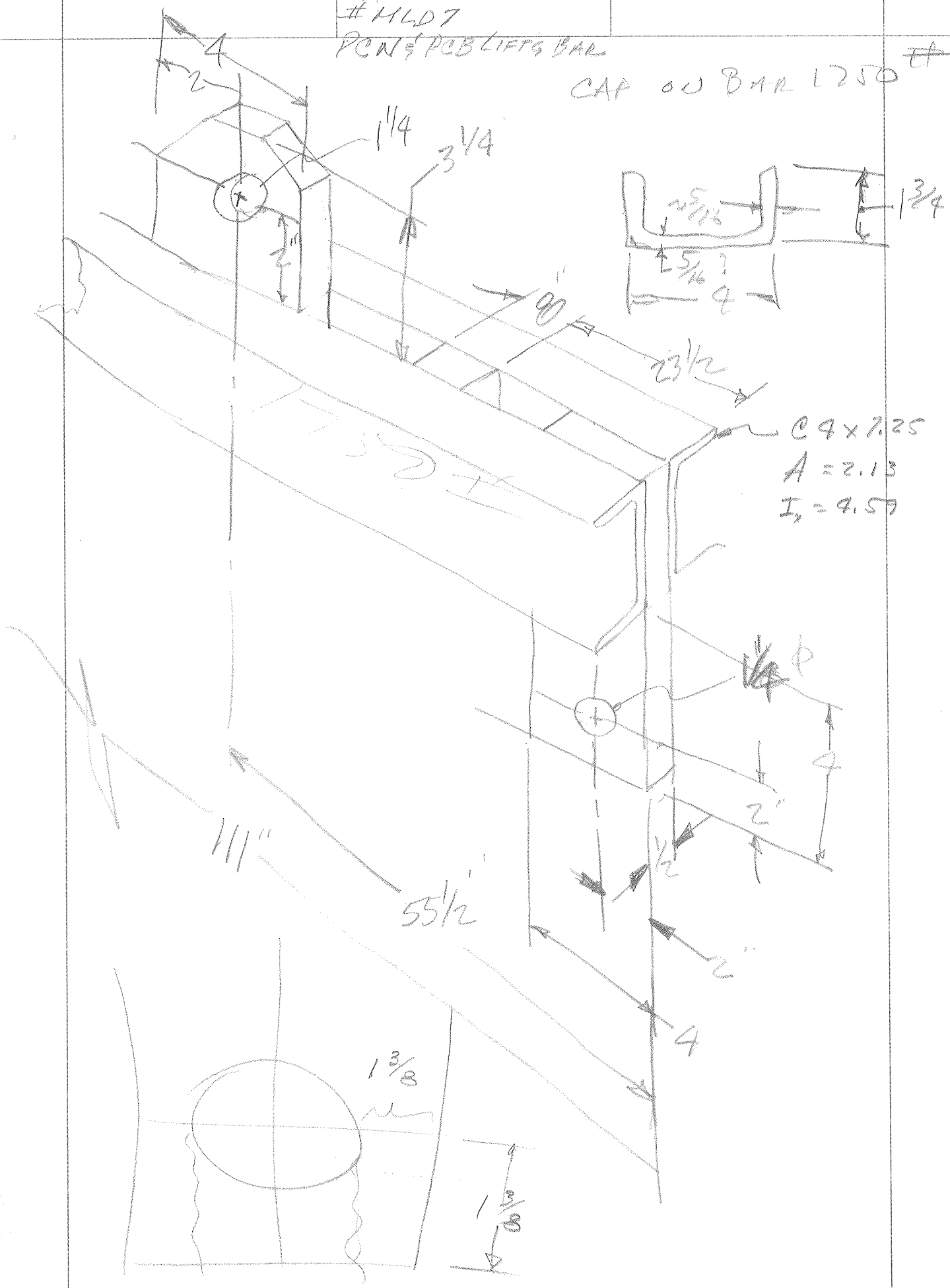

FERMILAB
# ENGINEERING NOTE

| SECTION | PROJECT | SERIAL-CATEGORY | PAGE |
|---|---|---|---|
| | | | |

SUBJECT: REVIEW NOTES OF E.M. WILLIAMS ENG' NOTE
LIFTING BAR, MUON LAB # M607

NAME: D. PUSHKA

DATE: 6/30/92

REVISION DATE: 0

✓ * OLD CODE - USE 1990 EDITION

✓ * INCORRECT WELD / CALC 3/16 VS. 1/4" -
1/4" CORRECT PER EMW.

* CHK TENSILE ON LUGS.

$A = 4 \cdot 1\frac{1}{4} = 2.75 \text{ IN}^2 \quad P = 2050\#$

$\sigma = \frac{P}{A} = 745 \text{ psi}$ ✓ OK

✓ * LAST LOAD TEST DATE? - TO BE DONE

✓ * NAME PL NEEDS WEIGHT

$\approx 175\#$

INDICATED ON ~~BAR~~.

$[2(8\times4 + 4\times8) + 7\frac{1}{4}\times4] \cdot$

$= \approx 175\#$

✓ * RATED LOAD LISTED ON ~~BAR~~.

✓ $\tau = \frac{F}{0.707hl} \Rightarrow F = (\tau)(0.707)hl$

$h = 3/16", \; l = 1", \; \tau = 50{,}000$

✓ * $F_J = \frac{F}{3} = \frac{\tau(.707)(hl)}{3} = \frac{(50{,}000)(.707)(0.1875)}{3}$

$F_J =$ ~~2651~~ #/INCH

$F_J = 2209$ #/INCH - 3/16 OKAY