LIFTING DEVICE

DEVICE NAME: NØI Lifting Rig: 500# Limit

ENGINEERING NOTE NUMBER: #46

APPLICABLE STANDARD: Aluminum Construction Manuals 1, 2, 3

RATED LOAD: 500#

TEST LOAD: 700# in the past / future tests should use 620 lbs

TEST LOAD PERCENT: 140% / 125%

LAST LOAD TEST DATE:

COLOR: Aluminum

STRESS CALCULATIONS:

Done by: Donald V. Mitchell

Date: 13-19 May '92

Reviewed by: Zhijing Tang

Date: June 9, 1992

REMARKS: DVM Frame was previously rated at 800 lbs and has been used to lift 700 lb objects. Stresses were shown to be above the allowable so the rated load has been reduced to 500 lbs.

IDENTIFICATION:

Engineering Note Number & Rated Load Must be Clearly Marked On a Conspicuous Surface.

FERMILAB
RESEARCH DIVISION / MECHANICAL DEPARTMENT - MS#221
WILSON HALL 13TH FLOOR - PHONE: (708) 840-4710 FAX : 840-2950

May 19, 1992

TO: Mechanical Safety Bulletin

FROM: DONALD V. MITCHELL

SUBJECT: N01 Lifting Rig: 500 Lb Load Capacity / ID # 46

Overview:

An aluminum lifting rig consisting of 2 channels, an I-beam and rollers is used to lift a maximum of 800 lbs.(as it is rated now) The I-beam spans a 92" gap between the two channels. The I-beam translates across both channels on 4 rollers; 2 at each end. The rollers are mounted to a thick plate which is fully welded to the I-beam. Because of this configuration, the I-beam appears to be fixed at both ends. However, the rollers are not fixed to the channel and are therefore pivot points for the I-beam, making the I-beam more similar to a simply supported beam.

Analysis:

The approach used was to look at the original setup. This was to include a complete stress analysis based on the rated 800 lb load plus an additional 40 lb dead load. If the stresses proved to be fine at this load, then a 125% load would be used for an additional stress analysis. On the other hand, if the stresses turned out too high, then the maximum rated load allowed by code would have to be determined.

Analysis at 840 Lbs:

The aluminum channels, Hilti drop-in anchors, and welds were found to be adequate when analyzed against allowable loads and stresses. (see attached documentation)

The 4" x 3.25" I-beam was analyzed as a simply supported beam and as a fixed beam. In reality, the beam type is somewhere between these two types of supports. (more similar to the simply supported beam) The stress at 840 Lbs was found to be 1550 psi **over** the allowable stress of 5410 psi.

A computer beam model was created to verify these results. Here, again, the stresses were above the allowable on the 92" I-beam.

The findings verified that the rated load of 800 Lbs is too large and needs to be reduced.

Analysis at 620 Lbs:

The load was slowly reduced to a value of 620 Lbs. At this load, the I-beam showed a stress of 5434 psi as a maximum. Hand calculations for a simply supported beam loaded to 620 Lbs showed a maximum stress of 5137 psi which was below the allowable. This 620 Lb load must include the 125% additional load for the load test.

Therefore, the rated load should be changed to 620 Lbs/1.25. This is approximately equal to 500 Lbs. The new rated load will be 500 Lbs.

Conclusion:

* The Lifting Rig will be re-rated at 500 Lbs.

* The current rating painted on the fixture must be changed to reflect this new rating.

* ID # 46 must be painted on the fixture in an obvious location.

* A load test is not needed. The fixture has supported weights many times in excess of the newly rated load.

SDRC I-DEAS VI: FE_Modeling_&_Analysis

12-MAY-92 14:51:26

Database: 800# lifting frame
View : No stored View
Task: Mesh Creation
Model: 2-FE MODEL2

Units : IN
Display : No stored Option
Model Bin: 1-MAIN
Associated Workset: 2-WORKING_SET2

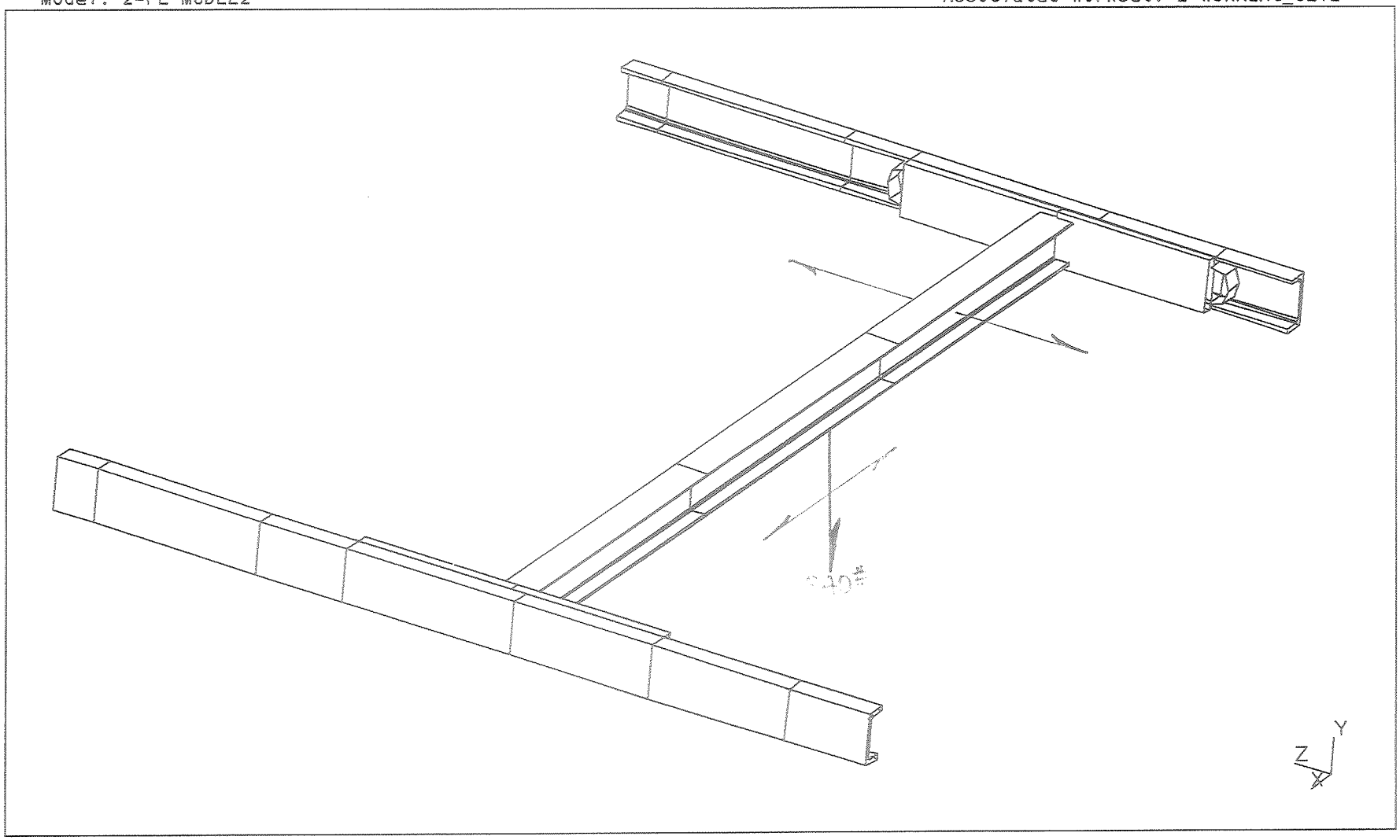

SDRC I-DEAS VI: FE_Modeling_&_Analysis

12-MAY-92 14:54:50

Database: 800# lifting frame
View : none, none
Task: Mesh Creation
Model: 2-FE MODEL2

Units : IN
Display : none, none
Model Bin: 1-MAIN
Associated Workset: 2-WORKING_SET2

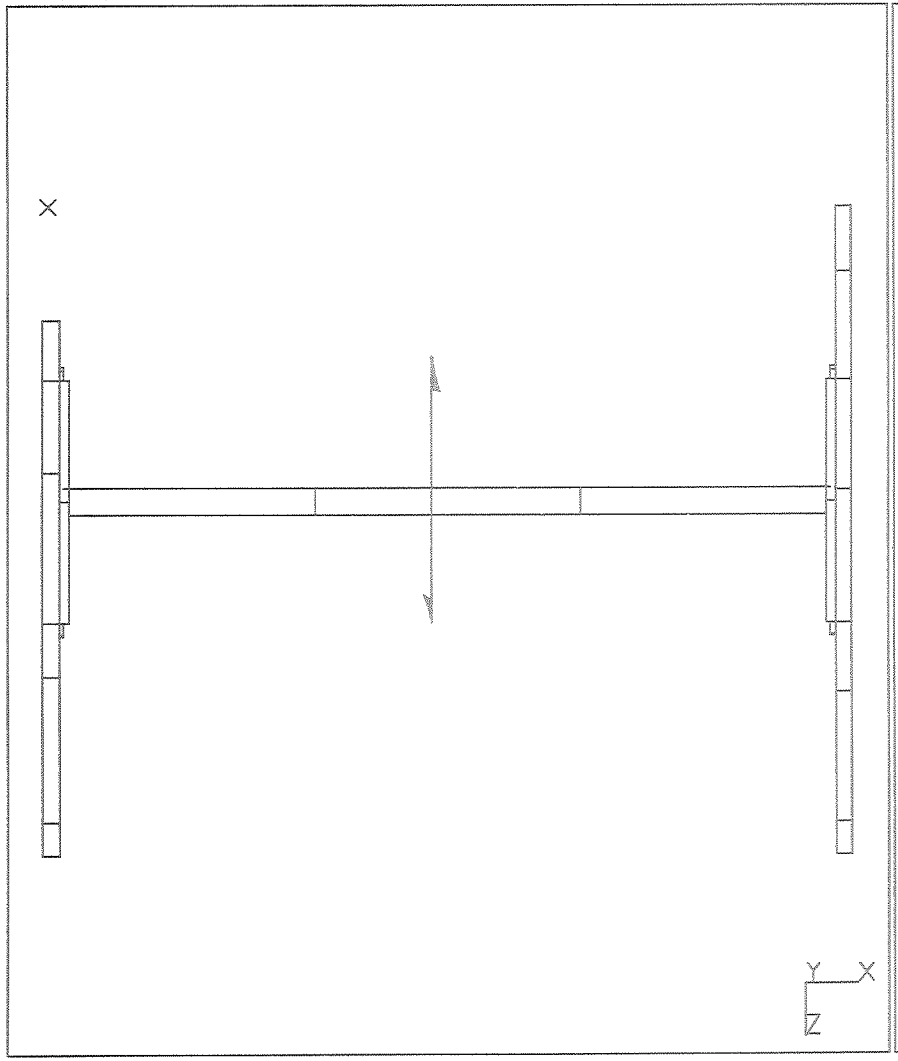

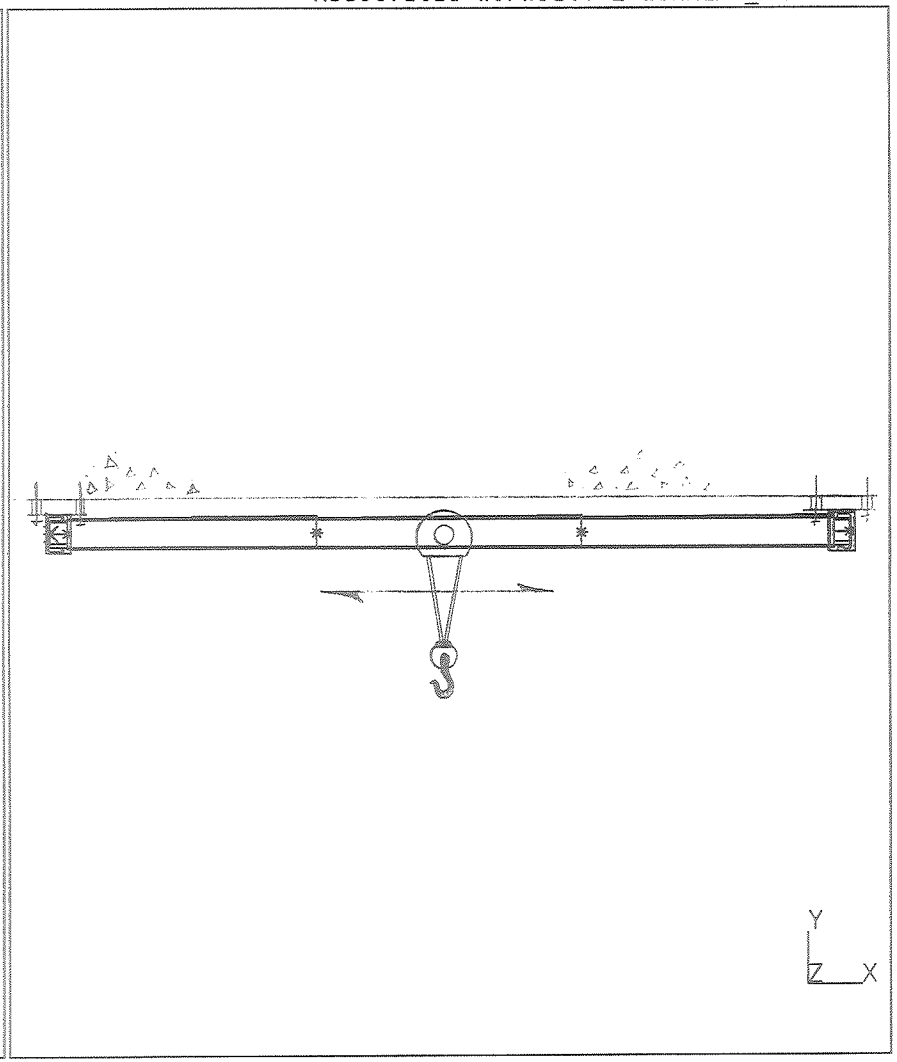

A 66" long Aluminum Channel and a 80" Aluminum Channel are anchored to a concrete ceiling with 8 group of 2 Hilti Anchors as shown below.

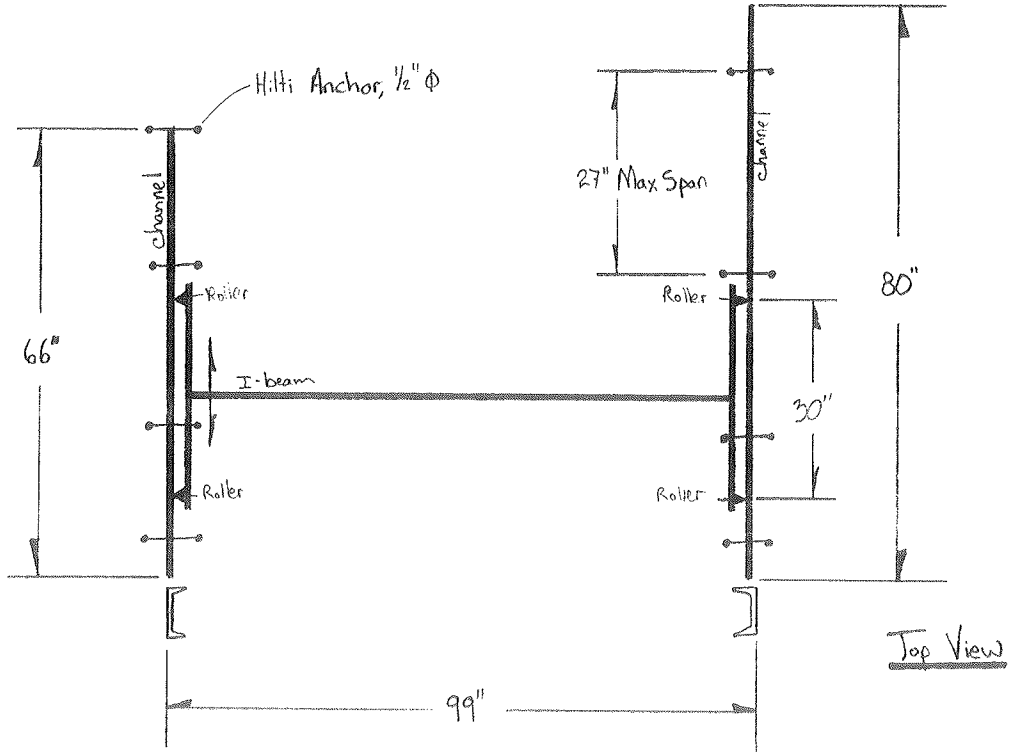

The worst stress case for the channel would be when the entire load is on the far end of the I-beam with one of the roller supports directly centered on the 27" span of Aluminum channel. This would be a conservative load of 420 lbs.

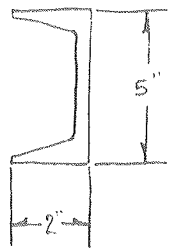

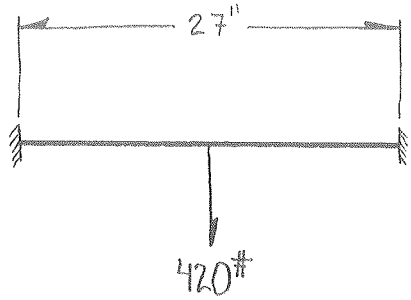

$S_x = 4.17 \text{ in}^3$

$I_x = 10.43 \text{ in}^4$

$r_y = .49"$

$L_B/r_y = \frac{27"}{.49} = 55.10$

Maximum Moment:

$$M_{max} = \frac{F}{8}(4x - L) = \frac{420}{8}\left[4(27/2) - 27\right] = 1{,}417.5 \text{ in-lb}$$

Maximum Deflection:

$$\delta_{max} = \frac{F\left(\frac{L}{2}\right)^2}{48\,EI}\left[4(L/2) - 3L\right]$$

$$\delta_{max} = \frac{420(27/2)^2}{48(10E6)(10.43)}\left[4(27/2) - 3(27)\right]$$

$$\delta_{max} = -.000413''$$

Maximum Stress:

$$\sigma_{max} = \frac{M_{max}}{S_x} = \frac{1{,}417.5 \text{ in-lb}}{4.17 \text{ in}^3} = \underline{\underline{339.9 \text{ psi}}} \longrightarrow \sigma_{max}$$

Calculate the Allowable Stress: From "Specifications for Aluminum Structures" p. 40

Tension: $F_b = 19{,}000$ psi and $\underline{\underline{11{,}000 \text{ psi}}}$ near welds. $\longrightarrow F_{b_{tens}}$

Compression: $L_B/r_y = 55.10$

$$F_b = 23.9 - .124\, L_B/r_y = 17.067 \text{ KSI} = \underline{\underline{17{,}067 \text{ psi}}} \longrightarrow F_{b_{comp}}$$

$$\sigma_{max} < F_b \quad \underline{\underline{OK}}$$

$$339.9 \text{ psi} < 11{,}000 \text{ psi}$$

SDRC I-DEAS VI: FE_Modeling_&_Analysis 13-MAY-92 08:48:12

Database: 800# lifting frame
View : No stored View
Task: Post Processing
Model: 2-FE MODEL2

Units : IN
Display : No stored Option
Model Bin: 1-MAIN
Associated Workset: 2-WORKING_SET2

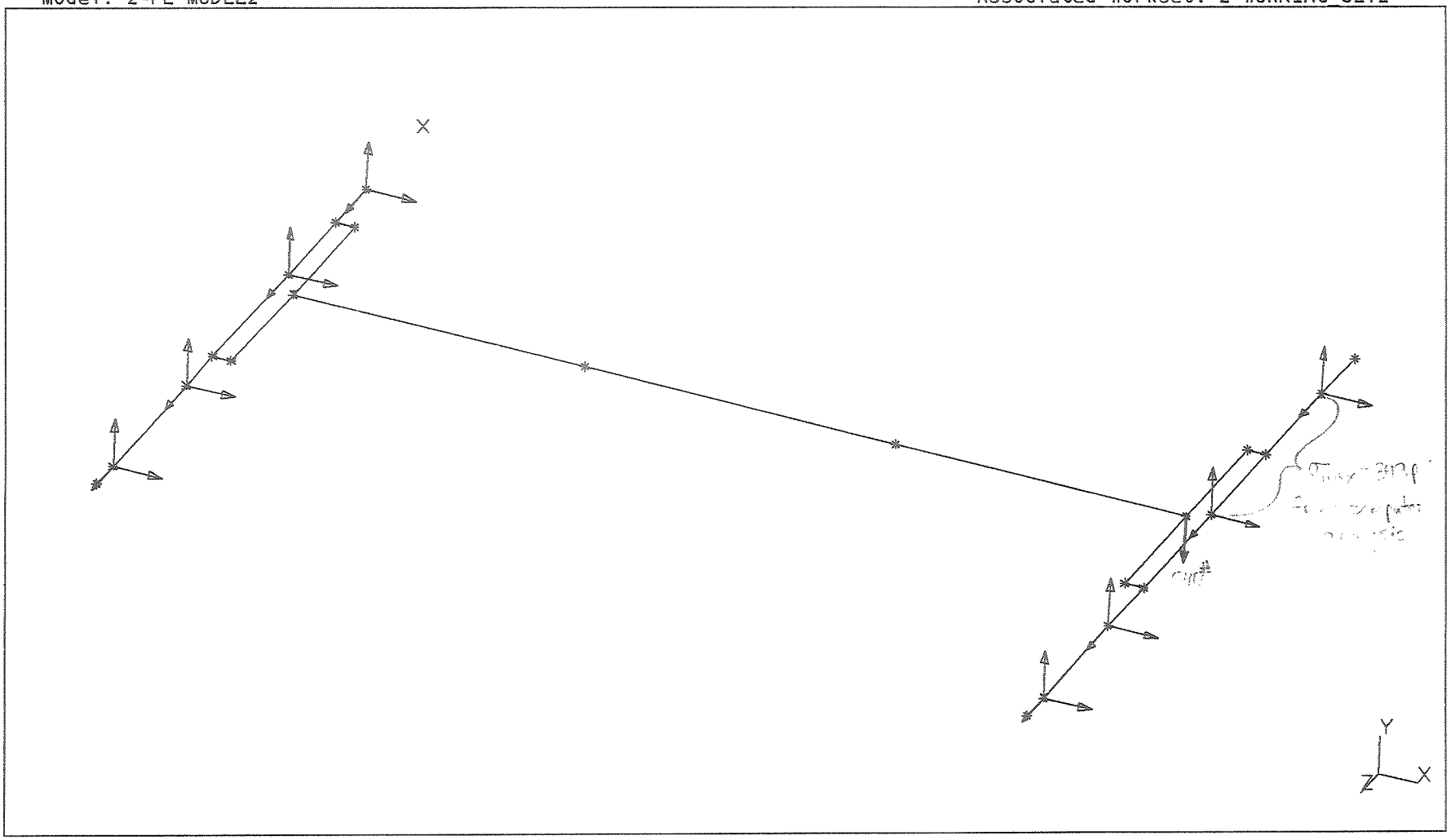

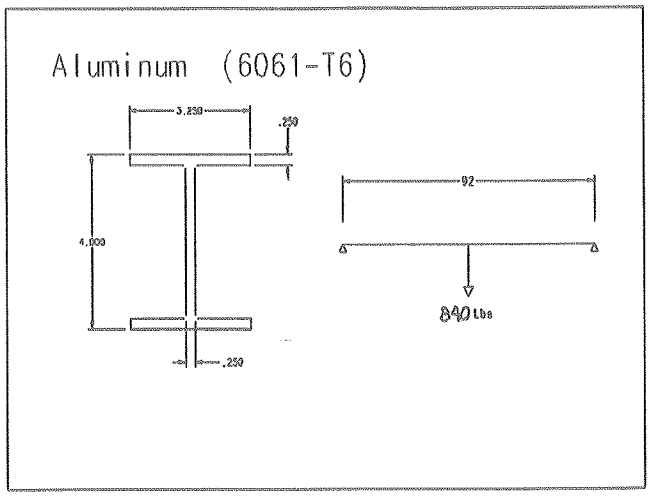

sbeam.mcs

This 4" x 3.25" I-beam spans 92" and is simply supported.

Constants: $F := 840$ lbs $L := 92$ in $x := 46$ in $c := 2$ in

$E := 10000000$ psi $I := 5.551$ in^4

Maximum Moment: $Mmax := F \cdot \frac{x}{2}$ $Mmax = 19320$ in-lb

Maximum Deflection:

$$\delta max := \frac{-\left[F \cdot L^3\right]}{48 \cdot E \cdot I} \qquad \delta max = -0.24549 \text{ in}$$

Maximum Stress:

$$\sigma max := \frac{Mmax \cdot c}{I} \qquad \sigma max = 6960.90794 \text{ psi}$$

Calculate Allowable Stress: from
"Specifications for Aluminum Structures" p. 40

Tension: $Fbt := 19000$ psi (near welds, Fb = 11000 psi)

Compression: $Lb := 92$ in unsupported length of beam

$ry := .7255$ in property of beam

$$Fbc := \frac{87000}{\left[\frac{Lb}{ry}\right]^2} \cdot 1000 \qquad Fbc = 5410.26368 \text{ ksi}$$

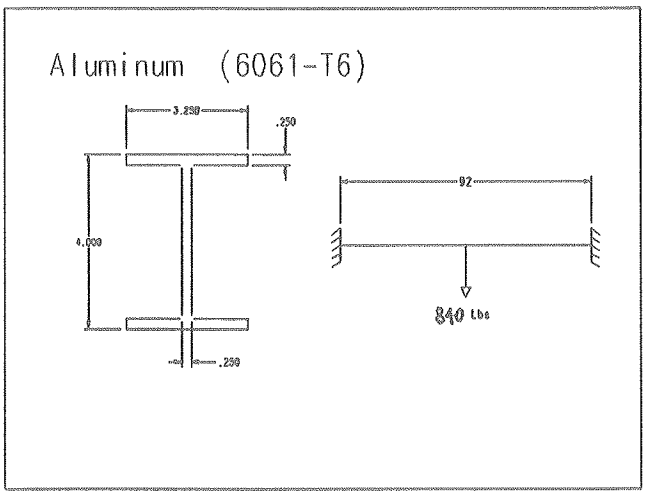

beam.mcs

This 4" x 3.25" I-beam spans 92" and can support 620 lbs without over-stressing the beam.

Constants: $F := 840$ lbs $L := 92$ in $x := 46$ in $c := 2$ in

$E := 10000000$ psi $I := 5.551$ in^4

Maximum Moment: $Mmax := \frac{F}{8} \cdot (4 \cdot x - L)$ $Mmax = 9660$ in-lb

Maximum Deflection:

$$\delta max := F \cdot \frac{\left[\frac{L}{2}\right]^2}{48 \cdot E \cdot I} \cdot \left[4 \cdot \left[\frac{L}{2}\right] - 3 \cdot L\right] \qquad \delta max = -0.06137 \text{ in}$$

Maximum Stress:

$$\sigma max := \frac{Mmax \cdot c}{I} \qquad \sigma max = 3480.45397 \text{ psi}$$

Calculate Allowable Stress: from
"Specifications for Aluminum Structures" p. 40

Tension: $Fbt := 19000$ psi (near welds, Fb = 11000 psi)

Compression: $Lb := 92$ in unsupported length of beam

$ry := .7255$ in property of beam

$$Fbc := \frac{87000}{\left[\frac{Lb}{ry}\right]^2} \cdot 1000 \qquad Fbc = 5410.26368 \text{ ksi}$$

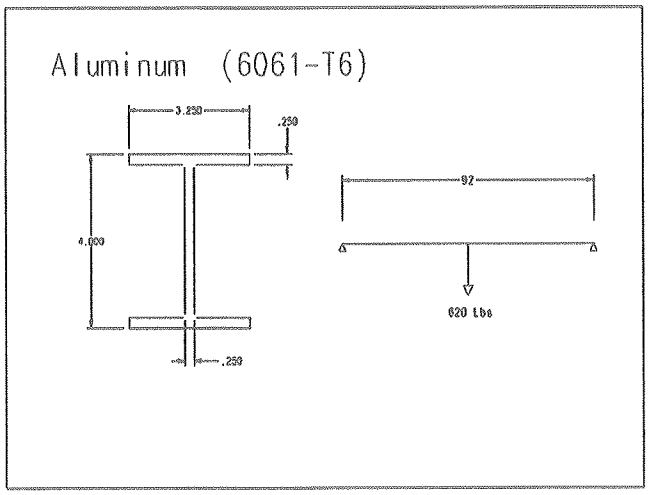

sbeam.mcs

This 4" x 3.25" I-beam spans 92" and is simply supported.

Constants: $F := 620$ lbs $L := 92$ in $x := 46$ in $c := 2$ in

$E := 10000000$ psi $I := 5.551$ in^4

Maximum Moment: $Mmax := F \cdot \frac{x}{2}$ $Mmax = 14260$ in-lb

Maximum Deflection:

$$\delta max := \frac{-\left[F \cdot L^3\right]}{48 \cdot E \cdot I}$$ $\delta max = -0.18119$ in

Maximum Stress: $$\sigma max := \frac{Mmax \cdot c}{I}$$ $\sigma max = 5137.81301$ psi

Calculate Allowable Stress: from
"Specifications for Aluminum Structures" p. 40

Tension: $Fbt := 19000$ psi (near welds, Fb = 11000 psi)

Compression: $Lb := 92$ in unsupported length of beam

$ry := .7255$ in property of beam

$$Fbc := \frac{87000}{\left[\frac{Lb}{ry}\right]^2} \cdot 1000$$ $Fbc = 5410.26368$ ksi

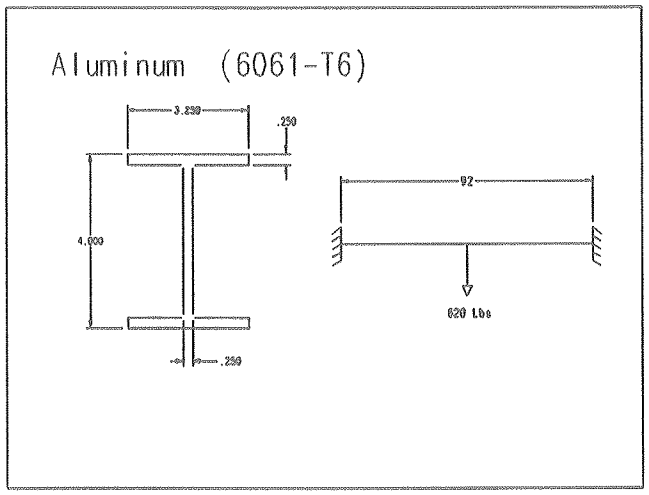

beam.mcs

This 4" x 3.25" I-beam spans 92" and can support 620 lbs without over-stressing the beam.

Constants: $F := 620$ lbs $L := 92$ in $x := 46$ in $c := 2$ in

$E := 10000000$ psi $I := 5.551$ in^4

Maximum Moment: $Mmax := \frac{F}{8} \cdot (4 \cdot x - L)$ $Mmax = 7130$ in-lb

Maximum Deflection:

$$\delta max := F \cdot \frac{\left[\frac{L}{2}\right]^2}{48 \cdot E \cdot I} \cdot \left[4 \cdot \left[\frac{L}{2}\right] - 3 \cdot L\right] \qquad \delta max = -0.0453 \quad \text{in}$$

Maximum Stress:

$$\sigma max := \frac{Mmax \cdot c}{I} \qquad \sigma max = 2568.9065 \quad \text{psi}$$

Calculate Allowable Stress: from
"Specifications for Aluminum Structures" p. 40

Tension: $Fbt := 19000$ psi (near welds, Fb = 11000 psi)

Compression: $Lb := 92$ in unsupported length of beam

$ry := .7255$ in property of beam

$$Fbc := \frac{87000}{\left[\frac{Lb}{ry}\right]^2} \cdot 1000 \qquad Fbc = 5410.26368 \quad \text{ksi}$$

The rig is attached to the concrete ceiling with 16 Hilti Drop-In Anchors. These are installed in 8 groups of 2 as shown below. 1/2" anchors are used.

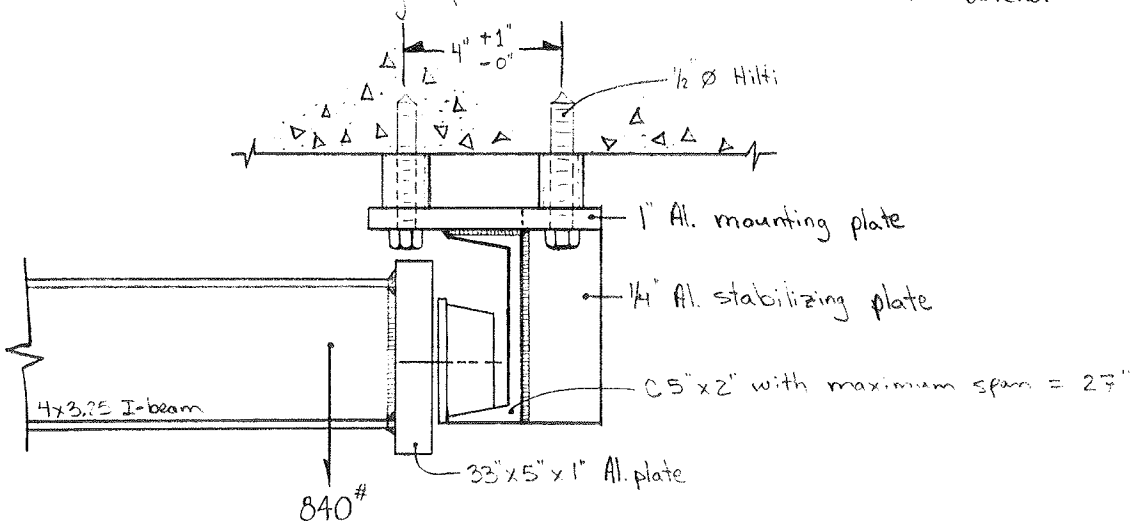

The minimum spacing for a 1/2" Hilti Drop-In anchor is 4". However, at this minimum spacing the allowable load in tension drops by 50%. (Reference, Hilti Catalog)

When mounted in 4000 psi Concrete, the allowable tensile load is 1690 lbs.

The adjusted allowable load is :

$(50\%)(1690 \text{ lbs}) = 845 \text{ lbs}$ ← Allowable Tensile load per bolt

In the worst case, 2 anchors must support the entire load of 840#. This is fine because any 2 anchors together can support 1690#. OK

WELDS:

All welds are full penetration, go around the entire beam, and are 3/16" welds.

The I-beam weld group has 9660 in-lb of moment on the welds.

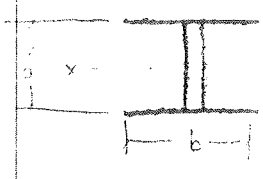

$S_x = bd + \frac{d^2}{3} = (3.25 \text{ in})(5 \text{ in}) + \frac{5^2}{3} = 18.33 \text{ in}^2$

$f_y = \frac{Mc}{S_x} = \frac{9660 \text{ in-lb}}{18.33 \text{ in}^2} = 526.9 \text{ lb/in}$

$f_{y\,shear} = \frac{840\#}{14.5 \text{ in}} = 57.9 \text{ lb/in}$

Resultant Load per inch : $R = \sqrt{526.9^2 + 57.9^2} = 530 \text{ lb/in}$

The shear stress on this weld group is: (From Table 7.1.3.2)

$$\tau_w = \frac{\text{Load}}{\text{Throat Area}} = \frac{530\ \text{lb}}{(.707)(.1875)(1")} = \underline{\underline{3{,}998\ \text{psi}}}$$ ← max shear stress on weld; I-beam

The channel weld group has, at a minimum, 8" of weld in direct shear.

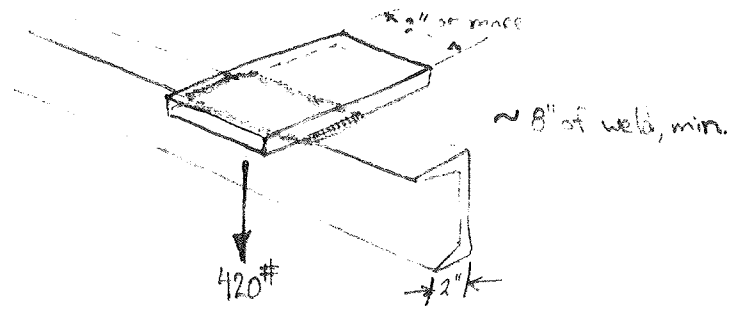

$$\tau_w = \frac{\text{Load}}{\text{Throat Area}} = \frac{420^{\#}}{(.707)(.1875)(8")} = \underline{\underline{39.6\ \text{psi}}}$$ ← max shear stress on weld; Channel

The Allowable shear stress for 4043 filler alloy on a base metal 6061-T6 is 5,000 psi. (From table 7.1.3.2, "Specification for Aluminum Structures")

$$\tau_L = \underline{\underline{5{,}000\ \text{psi}}}$$ ← Max. Allowable Shear

The maximum weld shear stress in the frame is less than the maximum allowable shear stress.

The Design is Adequate.

Table 3.3.27
Allowable Stresses for BUILDING and Similar Type Structures

6061—T6, —T651, —T6510, —T6511

Extrusions up thru 1 in., Sheet & Plate, Standard Structural Shapes, Rolled Rod and Bar, Drawn Tube, Pipe

Type of Stress	Type of Member or Component	Spec. No.	Allowable Stress, ksi
TENSION, axial, net section	Any tension member:	1	19
TENSION IN BEAMS, extreme fiber, net section	Rectangular tubes, structural shapes bent about strong axis	2	19
	Round or oval tubes	3	24
	Shapes bent about weak axis, rectangular bars, plates.	4	28
BEARING	On rivets and bolts	5	34
	On flat surfaces and pins and on bolts in slotted holes	6	23

6351-T5 Extrusions

			Allowable Stress, ksi, Slenderness ≤ S_1	Slenderness Limit, S_1	Allowable Stress, ksi Slenderness Between S_1 and S_2	Slenderness Limit, S_2	Allowable Stress, ksi Slenderness ≥ S_2
COMPRESSION IN COLUMNS, axial, gross section	All columns	7	19	$\frac{L}{r} = 9.5$	$20.2-0.126\frac{L}{r}$	$\frac{L}{r} = 66$	$\frac{51,000}{(L/r)^2}$
COMPRESSION IN COMPONENTS OF COLUMNS, gross section	Outstanding flanges and legs	8	19	$\frac{b}{t} = 5.2$	$23.1-0.79\frac{b}{t}$	$\frac{b}{t} = 12$	$\frac{1,970}{(b/t)^2}$
	Flat plates with both edges supported	9	19	$\frac{b}{t} = 16$	$23.1-0.25\frac{b}{t}$	$\frac{b}{t} = 33$	$\frac{490}{(b/t)}$
	Curved plates supported on both edges, walls of round or oval tubes	10	19	$\frac{R}{t} = 16$	$22.2-0.80\sqrt{\frac{R}{t}}$	$\frac{R}{t} = 141$	$\frac{3,200}{(R/t)(1+\sqrt{R/t}/35)^2}$
COMPRESSION IN BEAMS, extreme fiber, gross section	Single web beams bent about strong axis	11	21	$\frac{L_b}{r_y} = 23$	$23.9-0.124\frac{L_b}{r_y}$	$\frac{L_b}{r_y} = 79$	$\frac{87,000}{(L_b/r_y)^2}$
	Round or oval tubes	12	25	$\frac{R_b}{t} = 28$	$39.3-2.7\sqrt{\frac{R_b}{t}}$	$\frac{R_b}{t} = 81$	Same as Specification No. 10 (See Par. 3.4.12)
	Solid rectangular beams	13	28	$\frac{d}{t}\sqrt{\frac{L_b}{d}} = 13$	$40.5-0.93\frac{d}{t}\sqrt{\frac{L_b}{d}}$	$\frac{d}{t}\sqrt{\frac{L_b}{d}} = 29$	$\frac{11,400}{(d/t)^2(L_b/d)}$
	Rectangular tubes and box sections	14	21	$\frac{L_bS_c}{I_y} = 146$	$23.9-0.24\sqrt{\frac{L_bS_c}{I_y}}$	$\frac{L_bS_c}{I_y} = 1700$	$\frac{24,000}{(L_bS_c/I_y)}$
COMPRESSION IN COMPONENTS OF BEAMS, (component under uniform compression), gross section	Outstanding flanges	15	21	$\frac{b}{t} = 6.8$	$27.3-0.93\frac{b}{t}$	$\frac{b}{t} = 10$	$\frac{182}{(b/t)}$
	Flat plates with both edges supported	16	21	$\frac{b}{t} = 22$	$27.3-0.29\frac{b}{t}$	$\frac{b}{t} = 33$	$\frac{580}{(b/t)}$
COMPRESSION IN COMPONENTS OF BEAMS, (component under bending in own plane), gross section	Flat plates with compression edge free, tension edge supported	17	28	$\frac{b}{t} = 8.9$	$40.5-1.41\frac{b}{t}$	$\frac{b}{t} = 19$	$\frac{4,900}{(b/t)^2}$
	Flat plates with both edges supported	18	28	$\frac{h}{t} = 46$	$40.5-0.27\frac{h}{t}$	$\frac{h}{t} = 75$	$\frac{1,520}{(h/t)}$
	Flat plates with horizontal stiffener, both edges supported	19	28	$\frac{h}{t} = 107$	$40.5-0.117\frac{h}{t}$	$\frac{h}{t} = 173$	$\frac{3,500}{(h/t)}$
SHEAR IN WEBS, gross section	Unstiffened flat webs	20	12	$\frac{h}{t} = 36$	$15.6-0.099\frac{h}{t}$	$\frac{h}{t} = 65$	$\frac{39,000}{(h/t)^2}$
	Stiffened flat webs $a_e = a_1\Big/\sqrt{1+0.7(a_1/a_2)^2}$	21	12	— — —	12	$\frac{a_e}{t} = 66$	$\frac{53,000}{(a_e/t)^2}$

WHITE BARS apply to nonwelded members and to welded members at locations farther than 1.0 in. from a weld. apply within 1.0 in. of a weld.

① For all thicknesses with filler alloys 5356 or 5556. With filler alloys 4043, 5554 or 5654 values apply to metal 0.375 in. or less in thickness; for greater thicknesses multiply allowable stresses by 0.8.

② For all thicknesses with filler alloys 5356 or 5556; for metal 0.375 in. or less in thickness with filler alloys 4043, 5554 or 5654.

TABLE 7.1.3.1. GUIDE TO THE CHOICE OF ALUMINUM FILLER ALLOYS FOR GENERAL PURPOSE WELDING

Base Metal→ welded to Base Metal ↓	319.0, 333.0, 354.0, 355.0 C355.0	356.0, A356.0 A357.0, 359.0 413.0, 443.0 A444.0	511.0, 512.0 513.0, 514.0	7005, 7046 7146, 710.0 712.0	6070	6005, 6061, 6063, 6101, 6151, 6201, 6351, 6951,	5456	5454
1060, 1350	ER4145*c,i*	ER4043*i,f*	ER4043*e,i*	ER4043*i*	ER4043*i*	ER4043*i*	ER5356*c*	ER4043*e,i*
1100, 3003 Alclad 3003	ER4145*c,i*	ER4043*i,f*	ER4043*e,i*	ER4043*i*	ER4043*i*	ER4043*i*	ER5356*c*	ER4043*e,i*
2219	ER4145*g,c,i*	ER4145*c,i*	ER4043*i*	ER4043*i*	ER4043*f,i*	ER4043*f,i*	ER4043	ER4043*i*
3004, Alclad 3004	ER4043*i*	ER4043*i*	ER5654*b*	ER5356*e*	ER4043*e*	ER4043*b*	ER5356*e*	ER5654*b*
5005, 5050	ER4043*i*	ER4043*i*	ER5654*b*	ER5356*e*	ER4043*e*	ER4043*b*	ER5356*e*	ER5654*b*
5052, 5652a	ER4043*i*	ER4043*b,i*	ER5654*b*	ER5356*e*	ER5356*b,c*	ER5356*b,c*	ER5356*b*	ER5654*b*
5083	—	ER5356*c,e,i*	ER5356*e*	ER5183*e*	ER5356*e*	ER5356*e*	ER5183*e*	ER5356*e*
5086	—	ER5356*c,e,i*	ER5356*e*	ER5356*e*	ER5356*e*	ER5356*e*	ER5356*e*	ER5356*b*
5154, 5254*a*	—	ER4043*b,i*	ER5654*b*	ER5356*b*	ER5356*b,c*	ER5356*b,c*	ER5356*b*	ER5654*b*
5454	ER4043*i*	ER4043*b,i*	ER5654*b*	ER5356*b*	ER5356*b,c*	ER5356*b,c*	ER5356*b*	ER5554*c,e*
5456	—	ER4043*b,i*	ER5356*e*	ER5556*e*	ER5356*e*	ER5356*e*	ER5556*e*	—
6005, 6061, 6063, 6101, 6151, 6201, 6351, 6951	ER4145*c,i*	ER5356*c,e,i*	ER5356*b,c*	ER5356*b,c,i*	ER4043*b,i*	ER4043*b,i*	—	—
6070	ER4145*c,i*	ER4043*e,i*	ER5356*c,e*	ER5356*c,e,i*	ER4043*e,i*	—	—	—
7005, 7046, 7146, 710.0, 712.0	ER4043*i*	ER4043*b,i*	ER5356*b*	ER5039*e*	—	—	—	—
511.0, 512.0 513.0, 514.0	—	ER4043*b,i*	ER5654*b,d*	—	—	—	—	—
356.0, A356.0, A357.0, 359.0 413.0, 443.0, A444.0	ER4145*c,i*	ER4043*d,i*	—	—	—	—	—	—
319.0, 333.0, 354.0, 355.0, C355.0	ER4145*c,d,i*	—	—	—	—	—	—	—

a. Base metal alloys 5254 and 5652 are used for hydrogen peroxide service. ER5654 filler metal is used for welding both alloys for service at 150° F and below.
b. ER5183, ER5356, ER5554, ER5556, and ER5654 may be used. In some cases, they provide: (1) improved color match after anodizing treatment, (2) highest weld ductility, and (3) higher weld strength. ER5554 is suitable for elevated temperature service.
c. ER4043 may be used for some applications.
d. Filler metal with the same analysis as the base metal is sometimes used.
e. ER5183, ER5356, or ER5556 may be used.
f. ER4145 may be used for some applications.
g. ER2319 may be used for some applications.
i. ER4047 may be used for some applications.
j. ER1100 may be used for some applications.

5154 5254*a*	5086	5083	5052 5652*a*	5005 5050	3004 Alc. 3004	2219	1100 3003 Alc. 3003	1060 1350	←Base Metal welded to Base Metal ↓
ER4043*e,i*	ER5356*c*	ER5356*c*	ER4043*i*	ER1100*c*	ER4043	ER4145	ER1100*c*	ER1100*c*	1060, 1350
ER4043*e,i*	ER5356*c*	ER5356*c*	ER4043*e,i*	ER4043*e*	ER4043*e*	ER4145	ER1100*c*	—	1100, 3003 Alclad 3003
ER4043*i*	ER4043	ER4043	ER4043*i*	ER4043	ER4043	ER2319*c,f,i*	—	—	2219
ER5654*b*	ER5356*e*	ER5356*e*	ER4043*e,i*	ER4043*e*	ER4043*e*	—	—	—	3004, Alclad 3004
ER5654*b*	ER5356*e*	ER5356*e*	ER4043*e,i*	ER4043*d,e*	—	—	—	—	5005, 5050
ER5654*b*	ER5356*e*	ER5356*e*	ER5654*a,b,c*	—	—	—	—	—	5052, 5652*a*
ER5356*e*	ER5356*e*	ER5183*e*	—	—	—	—	—	—	5083
ER5356*b*	ER5356*e*	—	—	—	—	—	—	—	5086
ER5654*a,b*	—	—	—	—	—	—	—	—	5154, 5254*a*

Notes:

1. Service conditions such as immersion in fresh or salt water, exposure to specific chemicals, or a sustained high temperature (over 150° F) may limit the choice of filler metals. Filler metals ER5356, ER5183, ER5556, and ER5654 are not recommended for sustained elevated temperature service.
2. Recommendations in this table apply to gas shielded arc welding processes. For oxyfuel gas welding, only ER1100, ER4043, ER4047, and ER4145 filler metals are ordinarily used.
3. Filler metals are listed in AWS Specification A5.10-80.
4. Where no filler metal is listed, base metal combinations are not recommended for welding.

TABLE 7.1.3.2
ALLOWABLE SHEAR STRESSES IN FILLET WELDS FOR BUILDING TYPE STRUCTURES-ksi
(Shear Stress Is Considered To Be Equal To The Load Divided By The Throat Area)

Filler Alloy‡	1100	4043	5183	5356 5554	5556	5654
Parent Alloy						
1100	3.2	4.8†	—	—	—	—
3003	3.2	5	—	—	—	—
Alclad 3004		5	8	7	8†	—
5052	—	5	8	7	8.5	5
5083	—	—	8	7	8.5	—
5086	—	—	8	7	8.5	—
5154	—	—	8	7	8.5	5
5454	—	5	8	7	8.5	—
5456	—	—	8	7	8.5	—
6005, 6061, 6351	—	5	8	7	8.5	5
6063	—	5*	6.5†	6.5†	6.5†	5

†Values controlled by the shear strength of the parent metal.

‡Minimum expected shear strengths of filler alloys are:

Alloy				Alloy			
	1100	7.5	ksi		5554	17	ksi
	4043	11.5			5556	20	
	5183	18.5			5654	12	
	5356	17					

*8 ksi for welds joining round or oval members subject to bending and loaded transversely in socket type base assemblies for alloy 6063 lighting poles through 0.375″ wall thickness, when welded in T4 temper and artificially aged to T6 temper following welding. 5.9 ksi for lighting pole 6063 tubular joints other than socket type.