## LIFTING DEVICE

DEVICE NAME: MONORAIL CRANE FNAL # 27591

ENGINEERING NOTE NUMBER: 44

APPLICABLE STANDARD: ANSI B30.2.0-1967, AISC, OSHA

RATED LOAD: 2000#

TEST LOAD: 2500#

TEST LOAD PERCENT: 125

LAST LOAD TEST DATE:

COLOR:

STRESS CALCULATIONS:

Done by: [illegible]

Date: 5/6/92

Reviewed by: Ruth Webb

Date: 5/22/92

REMARKS:

IDENTIFICATION:

Engineering Note Number & Rated Load Must be Clearly Marked On a Conspicuous Surface.

CHECK CAPACITY OF MONORAIL CRANES FHAL #27591 & 27592:

DESIGN LOADS:

VERTICAL: CRANE CAPACITY 2000#
TROLLEY 300#
2300#
10% IMPACT 230 (AISC 1.3.3 P 5-15)
2530#

HORIZONTAL:
2530 x 20% = 506# (AISC 1.3.4 P 5-15)

RAIL SIZE = S 6 x 12.5

A = 3.67 $S_x = 7.37 \text{ IN}^3$ $I_x = 22.1 \text{ IN}^4$

$r_x = 2.45$ IN $J = 0.17 \text{ IN}^4$

$S_y = 1.09 \text{ IN}^3$ $I_y = 1.82 \text{ IN}^4$

$r_y = .705$ IN

$F_y = 79$

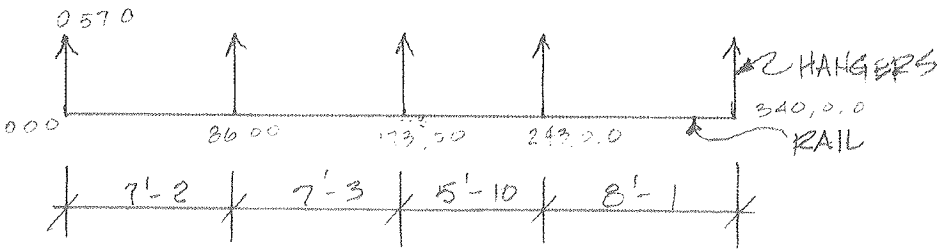


A) HANGERS:

4" x 1/4" PLATE SPAN = 4'-4

MAX. LATERAL LOAD:

$S = 4(.25)^2/6 = 0.0417 \text{ IN}^3$ $\ell = 52$

$r = .25/\sqrt{12} = 0.0722$ IN $A = .25(4.0) = 1.00 \text{ IN}^2$

$$F_{CR} = K \frac{\pi^2 E}{12(1-\mu^2)} \left(\frac{t}{b}\right)^2$$

$$= 0.425 \frac{(\pi^2(29{,}000))}{12(1-(0.3)^2)} \left(\frac{.25}{4}\right)^2$$

(FROM REF. 1 - SEE PAGES 8 AND 9 OF THESE CALCULATIONS)

$= 43.5$ KSI

USING 1.2 SAFETY FACTOR: (FROM REF. 1)

$F_{CR}/1.2 = 43.5/1.2 = 36.3$ KSI > 0.6 Fy

∴ BUCKLING WILL NOT OCCUR @ ALLOW. DESIGN STRESS

MAXIMUM HANGER BENDING = $F_b (S_x)$

FOR HORIZONTAL LOADING $S_x = bd^2/6$

$= .25(4)^2/6$

$= 0.667 \text{ IN}^3$

$F_b = 0.60 F_y$
$= 0.60(36)$
$= 21.6 \text{ KSI}$

(AISC 1.5.1.4.5 1 & 2b P 5-21 TO P 5-23)

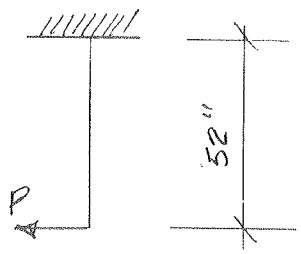


$M_{MAX} = F_b (S_x)$
$= 21.6 (0.667)$
$= 14.4 \text{ K-IN}$

$M = PL$

$\therefore P_{MAX} = M_{MAX}/L$

$= 14.4/52$

$= 0.277 \text{ K}$

$= 277\#$ < $506\#$ (FROM PAGE 1)

$\therefore$ HANGERS DO NOT PROVIDE LATERAL SUPPORT FOR MINIMUM AISC HORIZONTAL LOAD

MAXIMUM VERTICAL LOAD:

TENSION:

$\ell/r = 52/0.0722 = 720 > 240$

$= 720 > 240$ N.G. (AISC 1.8.4 P 5-29)

COMPRESSION:

$K\ell/r = 1.0(52)/0.0722$

$= 720 > 200$ N.G (AISC 1.8.4 P 5-29)

SINCE EXISTING HANGERS DO NOT MEET MINIMUM AISC SLENDERNESS REQUIREMENTS AND WILL NOT CARRY MINIMUM HORIZONTAL LOAD AS SPECIFIED BY THE AISC CODE, HANGERS MUST BE REINFORCED.

INVESTIGATE NUMBER OF EXISTING HANGERS WHICH WILL NEED TO BE REINFORCED.

1) BASED ON HORIZONTAL LOADING
TRY 1 SPAN CONDITION (ONLY ENDS REQUIRE LATERAL SUPPORT)

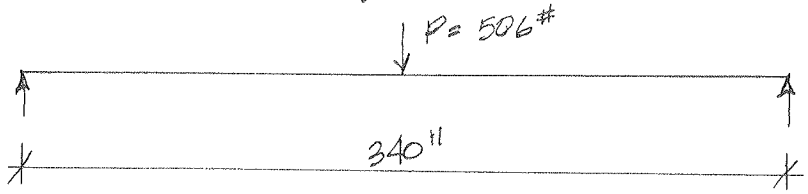


$M = PL/4$
$= 506(340)/4$
$= 43{,}010$ #-IN

$f_{by} = M/S$
$= 43{,}010/1.09$
$= 39{,}459$ PSI

$F_{by} = 0.75(F_y)$ (AISC 1.5, 1.4.3 P5-21)
$= 0.75(36{,}000)$
$= 27{,}000$ PSI

$f_{by} > F_{by}$ NG

TRY 2 SPAN CONDITION (BOTH ENDS PLUS CENTER SUPPORT REQUIRE LATERAL SUPPORT)

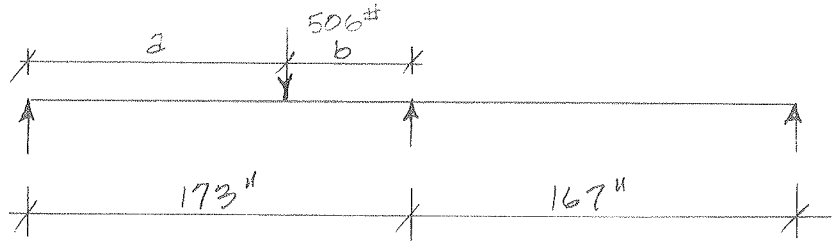


$M = \frac{Pab}{4l^3}(4l^2 - a(l+a))$

$= \frac{506(75)(98)}{4(173)^3}(4(173)^2 - 75(173+75))$

$= 18158$ #-IN

$f_{by} = 18158/1.09$
$= 16658$ PSI $< 27{,}000$ PSI OK

2) BASED ON VERTICAL LOADING
SINCE EACH HANGER DOES NOT MEET MINIMUM SLENDERNESS REQUIREMENTS, ALL HANGERS "r" VALUE MUST BE INCREASED.

FOR HORIZONTAL SUPPORT @ CENTER AND SOUTH END HANGERS:

DESIGN STRUT:
SINCE CRANE MUST BE LOAD TESTED TO 125% OF RATED LOAD DESIGN LOAD = 1.25 P:

$P_H = 506(1.25) = 633^{\#}$

USING MIN 30° L

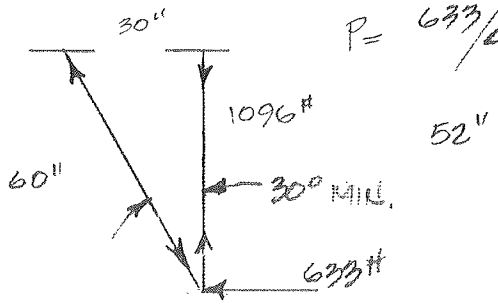


$P = 633/\cos 60° = 1266^{\#}$

52"

TRY L 3 x 3 x 1/4 $A = 1.44$ $r = .930$

$Kl/r = 1.0(60)/.930 = 65 < 200$ ok

(AISC 1.5.1.3 P 5-19)

$$F_a = \frac{\left[1 - \frac{(65)^2}{2(126.1)^2}\right] 36}{5/3 + \frac{3(65)}{8(126.1)} - \frac{(65)^3}{8(126.1)^3}} = 16.94 \text{ ksi}$$

$P_{ALLOW} = 16.94(1.44) = 24.4^k > 1.3^k$ ok

$r_{MIN} = Kl/126.1 = 1.0(60)/126.1 = 0.476$ IN

USE L 2 x 2 x 1/4 $r = .609 > 0.476$ ok

CONNECTIONS:

ALLOW. LOAD FOR 2-1/2" ϕ HILTI ANCHORS:
FROM 1992 "HILTI" CATALOG
TENSION = 1380 SHEAR = 2080 FOR 3 1/2" SPA.

FOR 2 BOLTS $P_T = 2(1380) = 2760^{\#}$

NOTE: WITH ABOVE BRACING SYSTEM, CONNECTION NOT ADEQUATE

MODIFY BRACING SYSTEM

## HANGER MODIFICATION FOR VERTICAL LOADS:

MINIMUM r FOR $kl/r = 200$:

$$1(52)/r = 200$$

$$r = 0.260 \text{ IN}$$

TRY ADDING 1" x 1/4" PLATE TO FORM A "T" SECTION

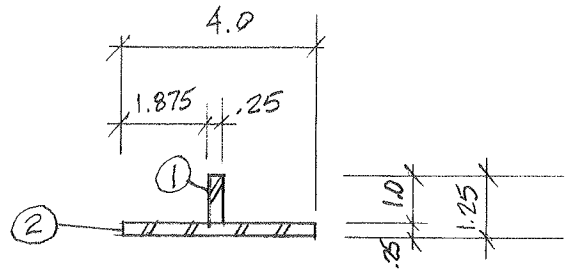


| PART | A | y | Ay | $Ay^2$ | $I_o$ | $Ay^2+I_o$ |
|---|---|---|---|---|---|---|
| 1 | .25 | .75 | .1875 | .1406 | 0.0208 | 0.1614 |
| 2 | 1.00 | .125 | .125 | .0156 | 0.0052 | 0.0208 |
| | 1.25 | | .3125 | | | 0.1822 |
| | | | | | | -0.0780 |
| | | | | | I = | 0.1042 |

$$\bar{y} = .3125/1.25 = 0.25 \text{ IN}$$

$$A\bar{y}^2 = 1.25(0.25)^2 = 0.078$$

$$r = \sqrt{I/A} = \sqrt{0.1042/1.25} = 0.289 \text{ IN} > 0.260 \text{ ok}$$

| PART | A | y | Ay | $Ay^2$ | $I_o$ | $Ay^2+I_o$ |
|---|---|---|---|---|---|---|
| 1 | .25 | 2.0 | .50 | 1.0 | 0.0013 | 1.0013 |
| 2 | 1.00 | 2.0 | 2.00 | 4.0 | 1.3333 | 5.3333 |
| | 1.25 | | 2.5 | | | 6.3343 |
| | | | | | | -5.0000 |
| | | | | | I = | 1.3343 |

$$\bar{y} = 2.5/1.25 = 2.00$$

$$A\bar{y}^2 = 1.25(2.0)^2 = 5.00$$

$$S = I/c = 1.3343/2 = 0.6672$$

MAXIMUM COMPRESSION LOAD:

$$C_c = 126.1 < kl/r = 200 \therefore F_a = \frac{12\pi^2 E}{23(kl/r)^2}$$

$$= \frac{12\pi^2(29{,}000)}{23(1.0(52)/0.289)^2}$$

$$= 4.61 \text{ KSI}$$

$$4.61(1.25) = 5.77^k$$

MAXIMUM TENSION LOAD:

$$0.45(36)(1.25) = 20.25^k$$

B) MONORAIL BEAM VERTICAL LOADING:
TRY 2 SPAN SUPPORT (LONGEST SPAN = 173"):

$$l/r_T = 173/0.79 = 220$$

$$\therefore F_{b_x} = \frac{12\times10^3 C_{1a}}{ld/A_f} = \frac{12\times10^3(1.0)}{14.5(12)(5.02)} = 13.74 \text{ KSI}$$

(AISC 1.5.1.4.5 #2 P 5-22)

$$M_{MAX} = F_b(S_x) = 13.74(7.37) = 101.25 \text{ K-IN} = 101{,}250 \text{ \#-IN}$$

$$\text{POS MOMENT} = \frac{Pab}{4l^3}\left(4l^2 - a(l+a)\right) = \frac{2530(75)(98)}{4(173)^3}\left(4(173)^2 - 75(173+75)\right) = 90{,}788 \text{ \#-IN}$$

X1.25 FOR LOAD TEST = 113 485 #-IN > 101,250 #-IN NG

TRY 4 SPAN SUPPORT (LONGEST SPAN = 97"):

$$l/r_T = 97/0.79 = 123$$

$$F_{b_x} = \frac{12\times10^3(1.0)}{97(5.02)} = 24.6 \text{ KSI} > 0.60F_y$$

$$\therefore \text{USE } F_{b_x} = 0.60(36) = 21.6$$

(AISC 1.5.1.4.5 #2 P 5-22)

$$M_{MAX} = 21600(7.37) = 159{,}192 \text{ \#-IN}$$

SINCE MOMENT CAPACITY IS GREATER THAN MAX. 2 SPAN MOMENT ABOVE, 4 SPAN ANALYSIS NOT REQ'D. OK

C) REVISED HANGER:

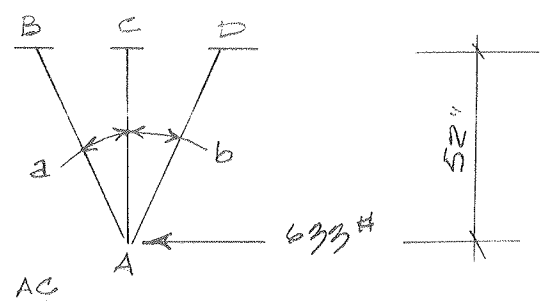


$a = b = 25°$

$$AB \text{ OR } AD = \frac{AC}{\cos 25} = 52/\cos 25 = 57.38''$$

$$Kl/r = (1.0)(57.4)/.609 = 94.2 < 200 \quad \text{OK}$$

$$F_a = \frac{\left[1 - \frac{(Kl/r)^2}{2C_c^2}\right]F_y}{5/3 + \frac{3Kl/r}{8C_c} - \frac{(Kl/r)^3}{8C_c^3}} = \frac{\left[1 - \frac{(94.2)^2}{2(126.1)^2}\right]36}{5/3 + \frac{3(94.2)}{8(126.1)} - \frac{94.2^3}{8(126.1)^3}} = 13.7 \text{ KSI}$$

ACTUAL LOAD ON AB & AD:

$(633/2) / \sin 25^\circ = 748.9\#$

$f_a = 748.9/.938$

$= 798$ PSI $< 13.7$ KSI ok

USE L 2×2×¼

REFERENCE 1 :

FROM: "STRUCTURAL STEEL DESIGN" BEEDLE ET.AL. 1964 RONALD PRESS COMPANY.



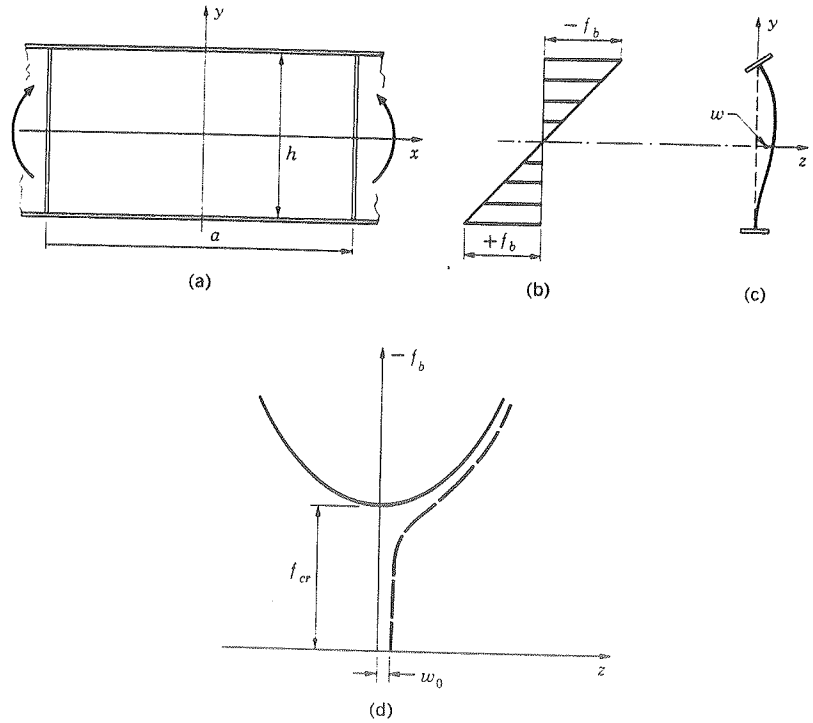


Fig. 8.4 Plate Buckling Due to Pure Bending

tion will occur until the critical buckling stress $F_{cr}$ is reached. At this point, the web is in a condition of unstable equilibrium. Any further increase in the applied moment will cause the web to buckle according to one of the solid curves of Fig. 8.4*d*, assuming a deflected shape similar to that shown in Fig. 8.4*c*. However, if the web has some initial deflection $w_o$ at the center, the behavior will be that shown by the dashed line in Fig. 8.4*d*; no sudden buckling will occur but deflection will increase gradually as the moment increases. Although in all practical cases some initial out-of-straightness will exist, the theoretical case of an initially perfectly plane web is used as a basis for design rules.

An expression for the critical buckling stress $F_{cr}$ is derived in Art. 17.3 and is rewritten here as

$$F_{cr} = \frac{k\pi^2 E}{12(1 - \mu^2)}\left(\frac{t}{h}\right)^2 \tag{8.1}$$

where $k$ is the buckling coefficient, $E$ is the modulus of elasticity (for steel, $E = 29{,}000$ ksi), $\mu$ is Poisson's ratio (for steel, $\mu = 0.3$), $t$ is the plate thickness, and $h$ is the web depth or clear distance between flanges.

REFERENCE 1:

FROM: "STRUCTURAL STEEL DESIGN" BEEDLE ETAL 1964 RONALD PRESS COMPANY



It should be noted that $F_{cr}$ can be either a critical compressive stress due to bending or a critical shear stress, depending on the loading condition. The coefficient $k$ is a function of the plate geometry, loading condition, and the edge conditions.

The basic factor of safety used in the AASHO Specifications is $F_y/F_b = 33/18 = 1.83$. Although the design rules developed in the following are based on the buckling strength of the girder web or a portion of the stiffened web, the existence of post-buckling strength will be recognized by the use of appropriately reduced factors of safety for certain types of web buckling.

### 1. Design for Bending

**Limiting Slenderness Ratios.** Equation 8.1 can be solved for the slenderness ratio $h/t$ with $\mu = 0.3$, thus

$$\frac{h}{t} = 0.951\sqrt{\frac{kE}{F_{cr}}} \tag{8.2}$$

For a plate subjected to pure bending, the buckling coefficient $k$ cannot be less than 23.9.[7,6] Substituting this value in Eq. 8.2, the web slenderness ratio $h/t$ becomes

$$\frac{h}{t} = 4.65\sqrt{\frac{E}{F_{cr}}} \tag{8.3}$$

Since a plate girder will not fail when web buckling due to bending occurs, the applied loads can be increased beyond the buckling load (see Art. 8.3). This post-buckling strength is utilized by adopting limiting slenderness ratios which inherently provide for a low factor of safety, F.S. = 1.2. Thus, the critical stress $F_{cr}$ is limited by the product of the maximum allowable bending stress (max. $F_b = (18/33)F_y$) and the factor of safety, $F_{cr} = 1.2F_b$. Substituting this expression into Eq. 8.3 and using $E = 29{,}000$ ksi, the AASHO limiting web slenderness ratios for various types of steels are obtained as shown in Table 8.1.

Table 8.1 AASHO Limiting Slenderness Ratios—No Longitudinal Stiffener

| Type of Steel | Max. $F_b$ (ksi) | Max. $h/t$ |
|---|---|---|
| Structural carbon | 18.0 | 170 |
| Structural silicon | 24.0 | 145 |
| High-strength low-alloy ($\frac{3}{4}$ to $1\frac{1}{2}$ in.) | 24.0 | 145 |
| High-strength low-alloy (under $\frac{3}{4}$ in.) | 27.0 | 140 |

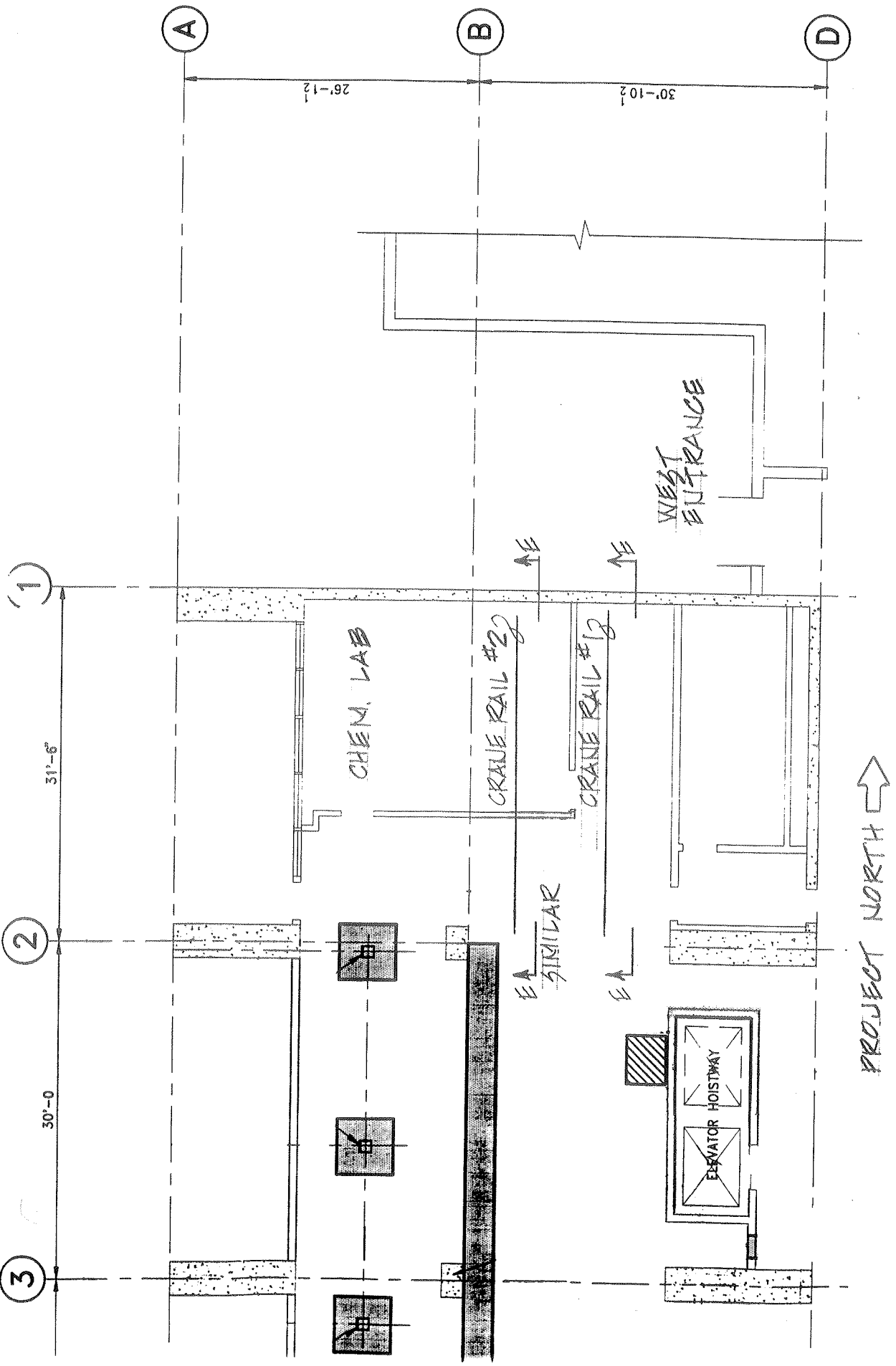


PARTIAL GROUND FLOOR PLAN

SCALE: NONE

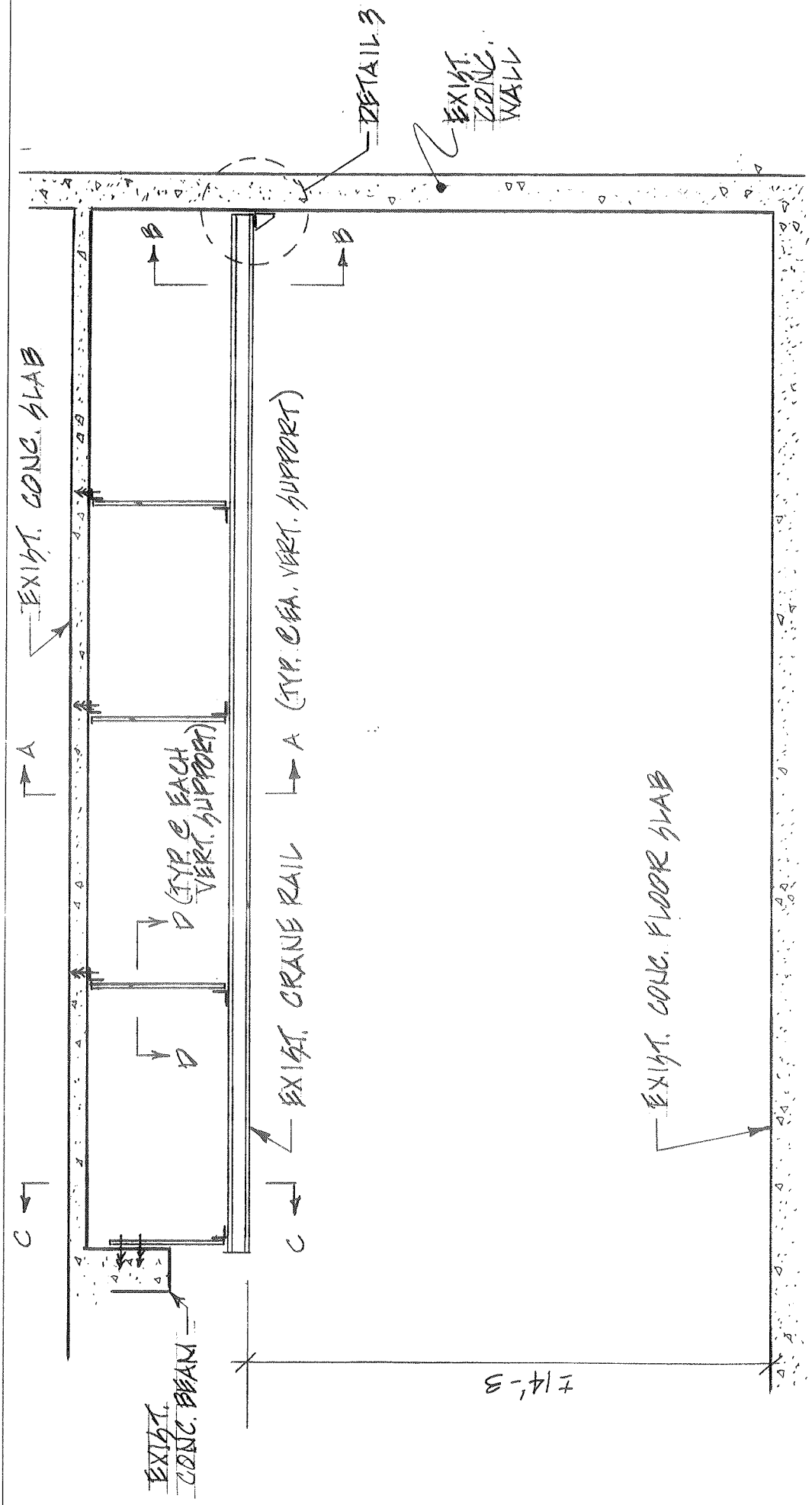


SECTION E-E

SCALE: 1/4" = 1'-0

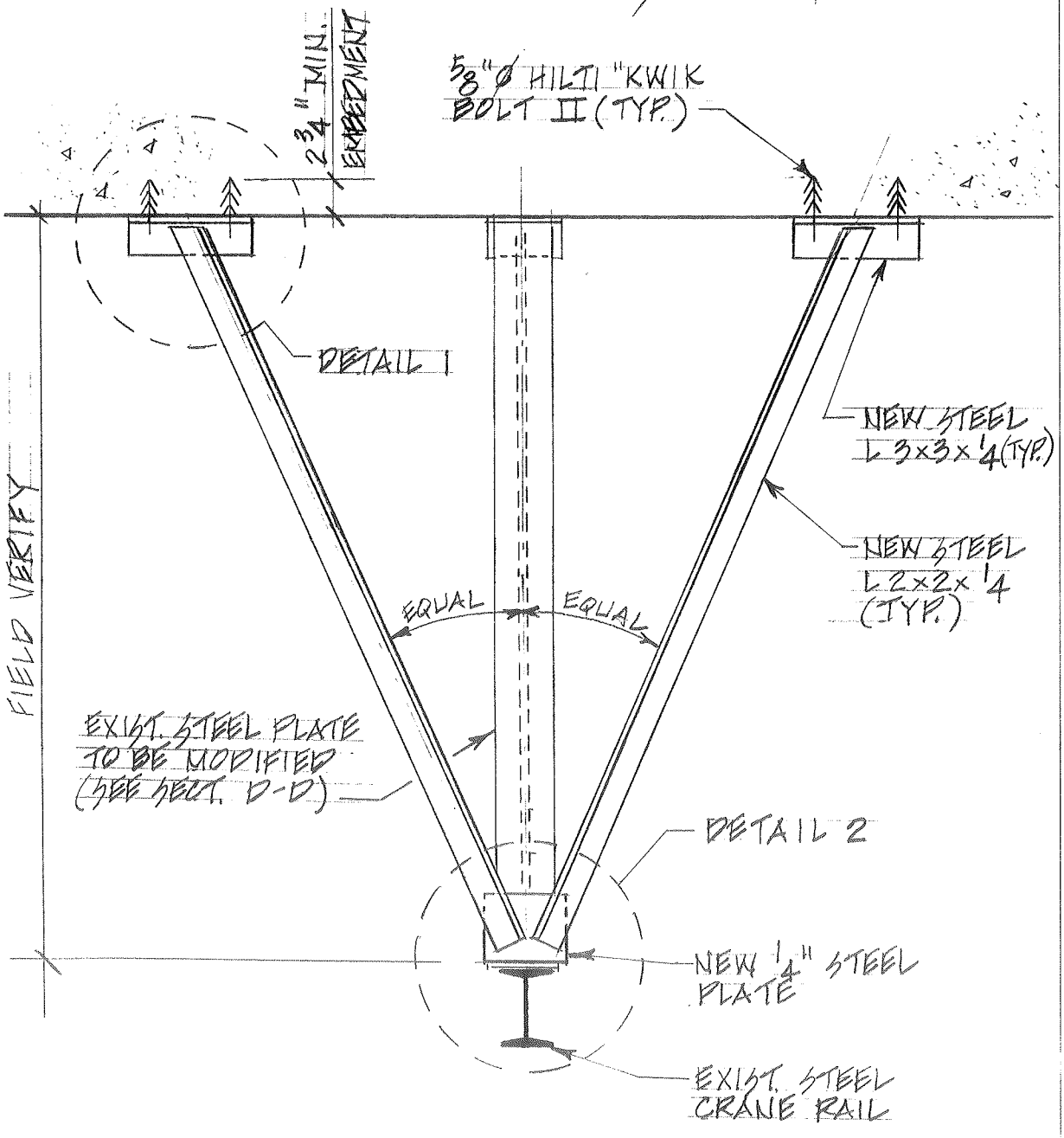


# SECTION A-A

SCALE: 1" = 1'-0

NOTES:

1. ALL NEW STEEL ANGLES AND PLATES SHALL CONFORM TO ASTM DESIGNATION A-36.
2. ALL WELDING SHALL BE PERFORMED BY CERTIFIED WELDERS USING E70XX ELECTRODES

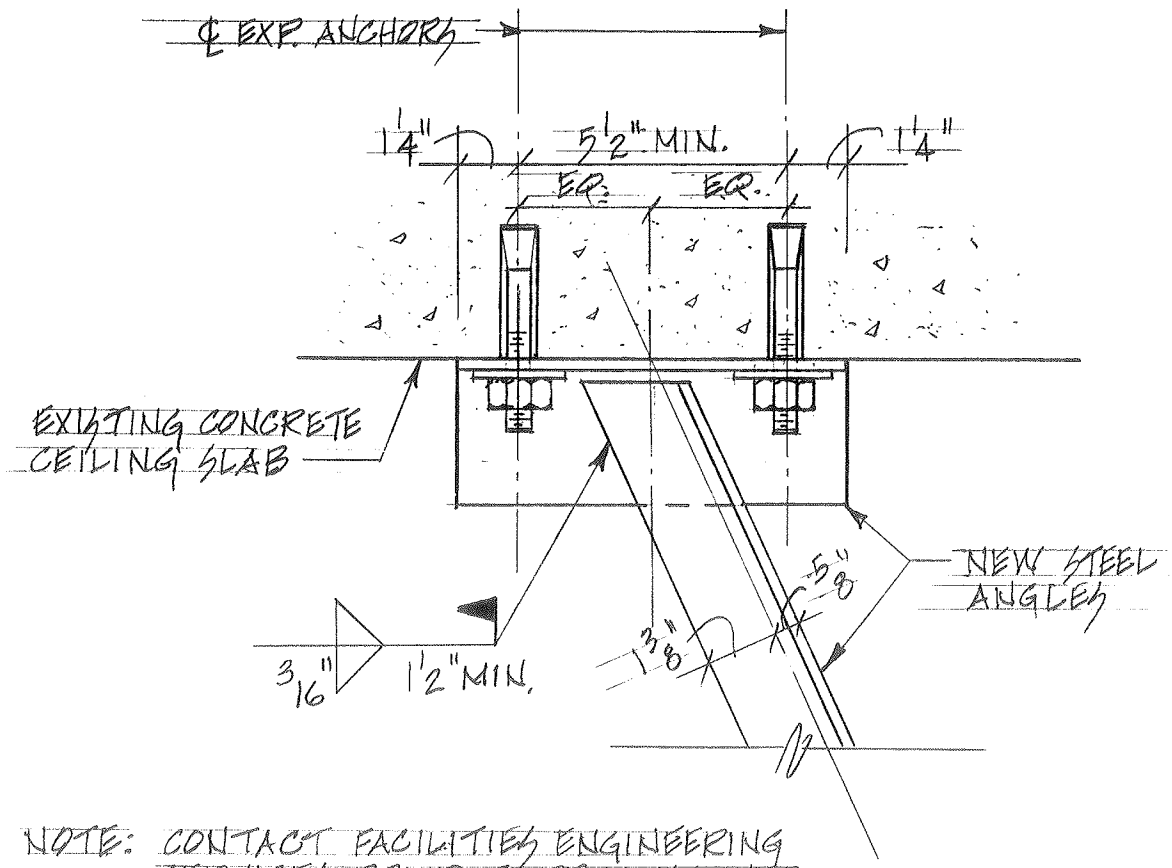


NOTE: CONTACT FACILITIES ENGINEERING SERVICES PRIOR TO DRILLING INTO CONCRETE CEILING SLAB.

# DETAIL 1

SCALE: 3" = 1'-0

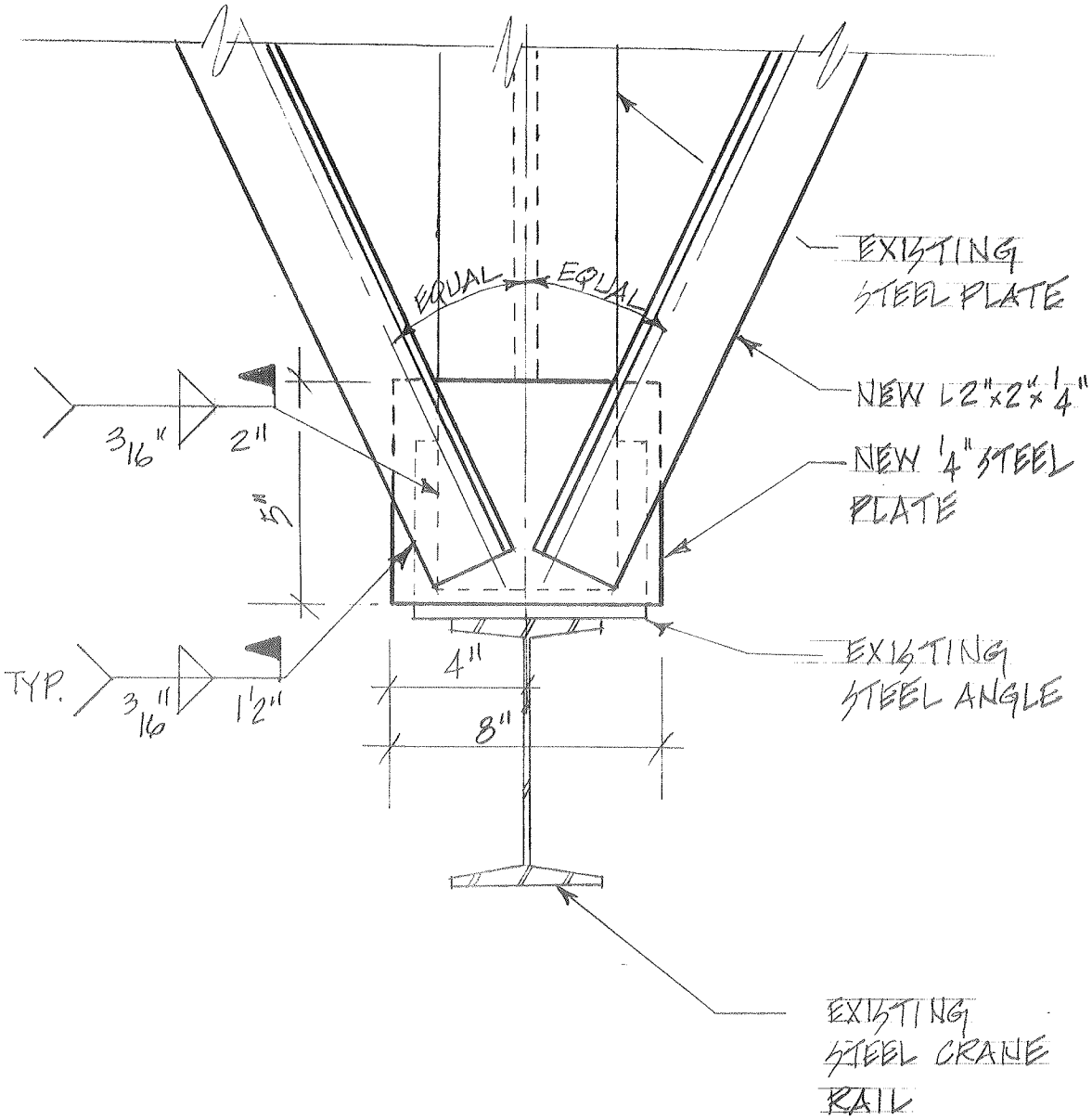


# DETAIL 2

SCALE: 3"=1'-0

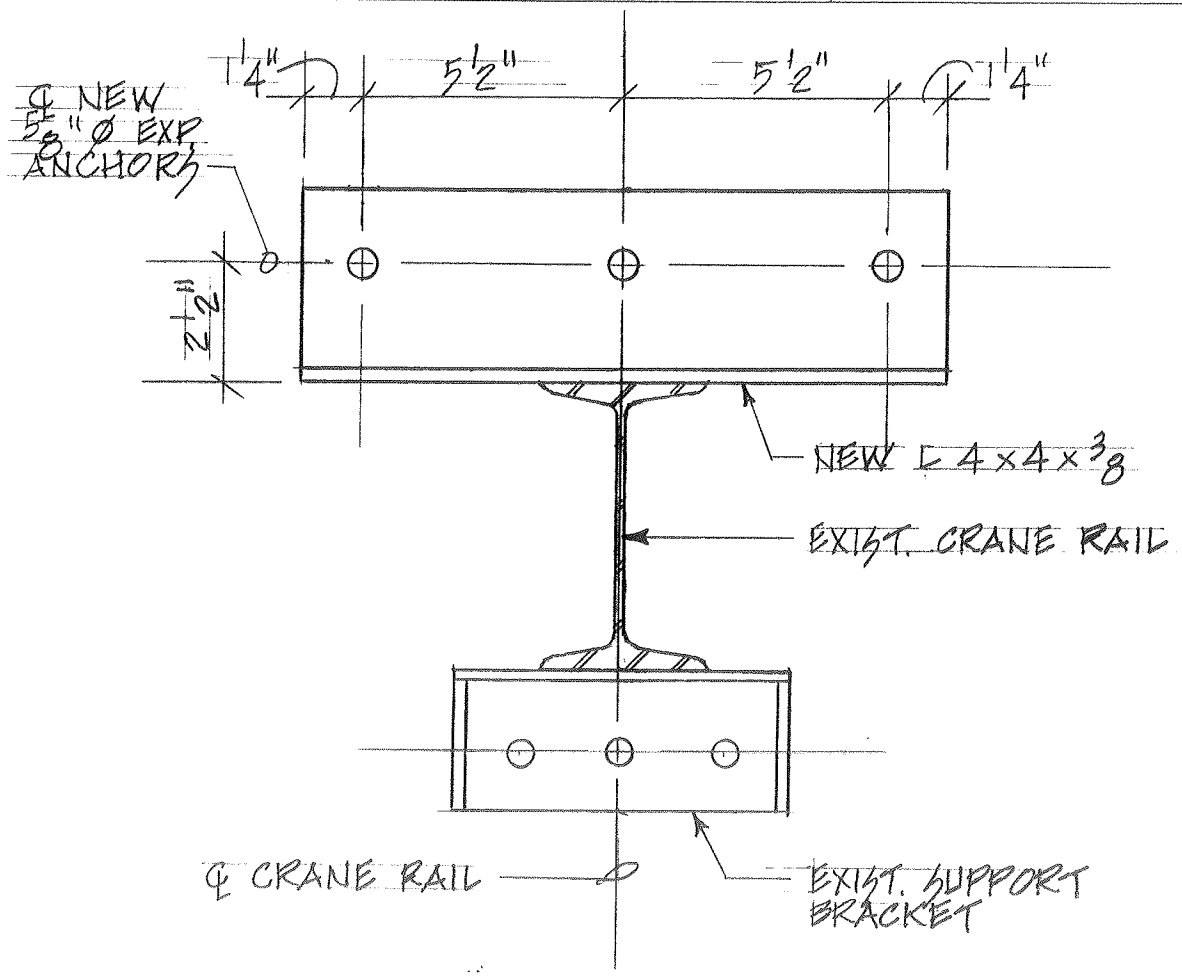


## SECTION B-B

SCALE: 3" = 1'-0

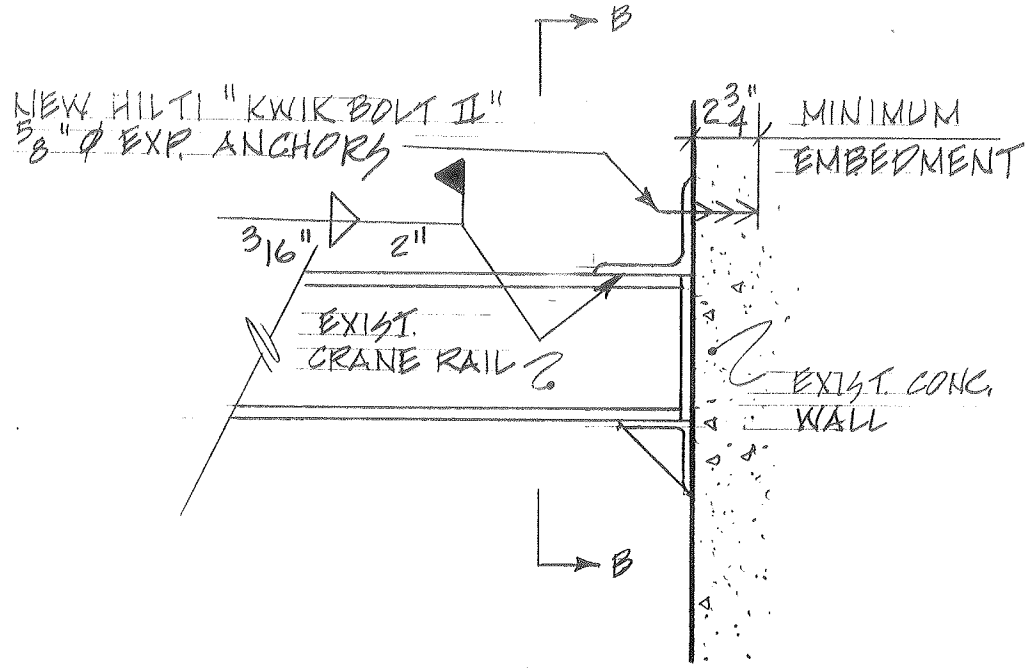


## DETAIL 3

SCALE: 1 1/2" = 1'-0

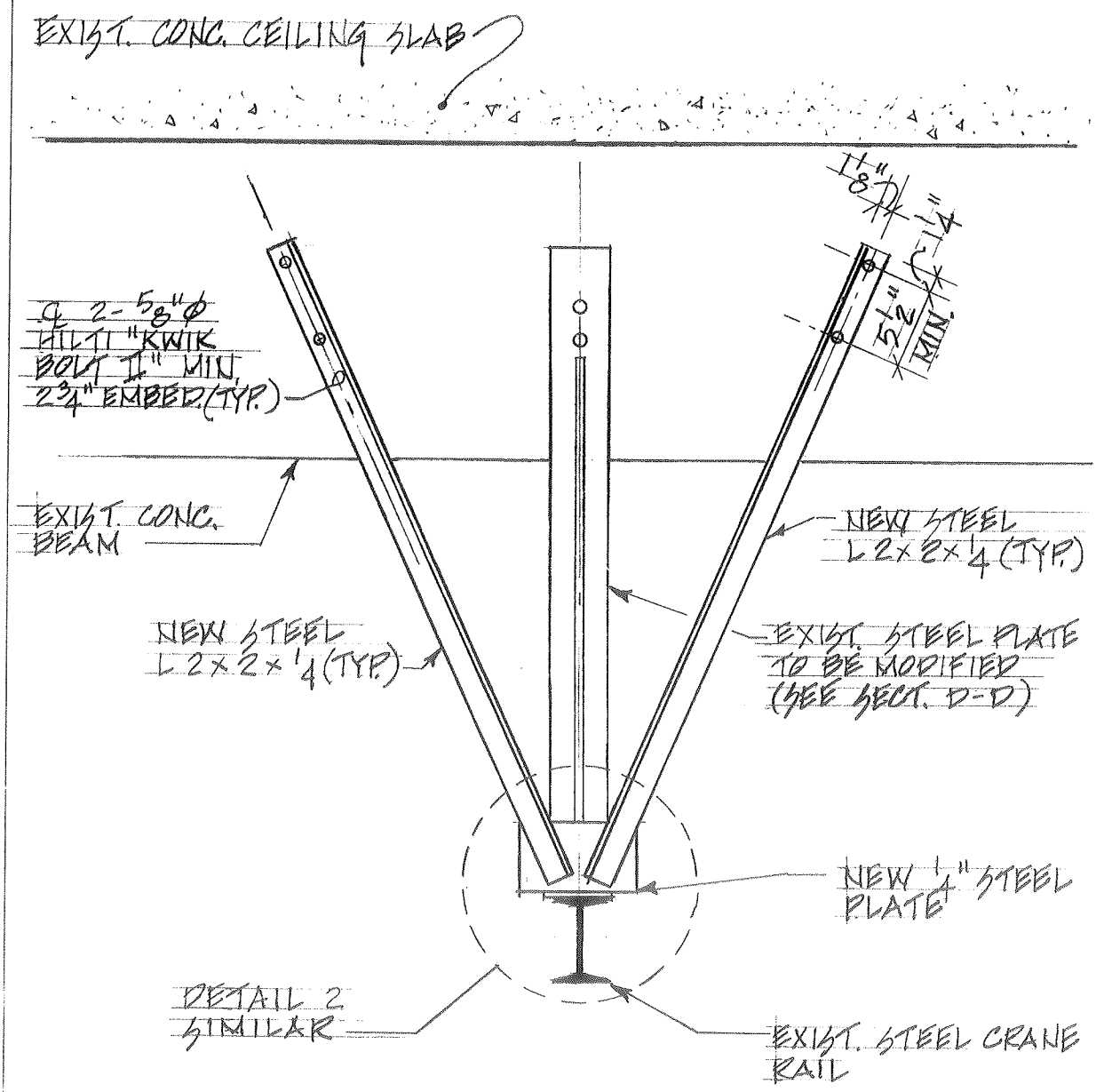


# SECTION C-C

SCALE: 1" = 1'-0

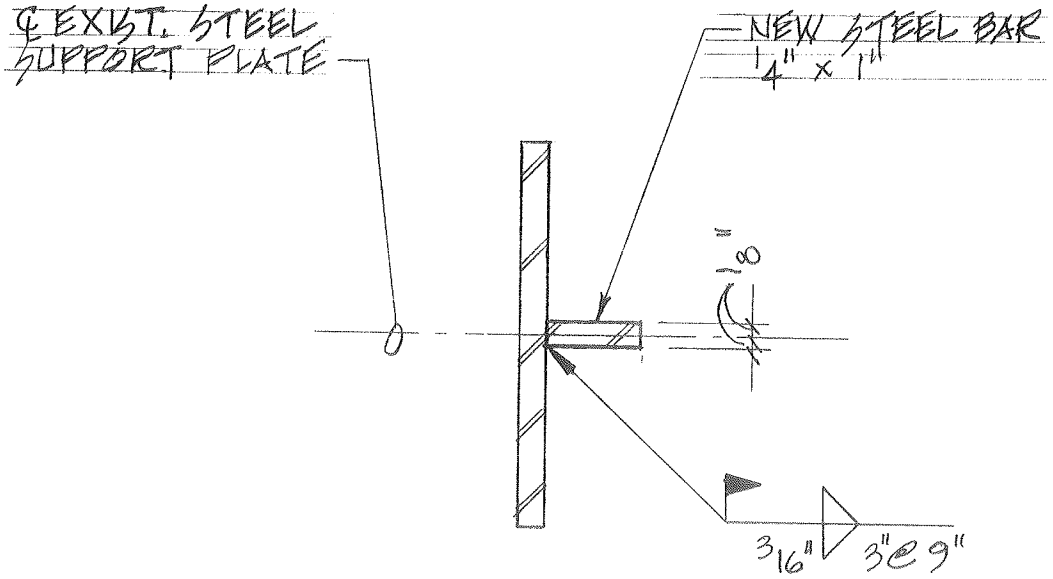


SECTION D-D

SCALE: 1/2" = 0'-1