LIFTING DEVICE

DEVICE NAME: 600# HUON LIFTING FIXT.

ENGINEERING NOTE NUMBER: 43

APPLICABLE STANDARD: ASME B30.2-1990 OVERHEAD & GANTRY CRANES

SPEC. FOR ALUM. STRUCT. 5TH Ed, 1986

RATED LOAD: 600#

TEST LOAD: 750#

TEST LOAD PERCENT: 125%

LAST LOAD TEST DATE: 8/17/92

COLOR: UNPAINTED ALUM.

STRESS CALCULATIONS:

Done by: E. M. VILLEGAS

Date: 4/17/92

Reviewed by: [signature]

Date: 8/10/92

REMARKS:

WITNESSING LOAD TEST:

E. M. Villegas RD/MECH DEP 8/17/92

Marsha E. Michels RD/ES&H #8971 8-17-92

IDENTIFICATION:

Engineering Note Number & Rated Load Must be Clearly Marked On a Conspicuous Surface.

Pg #2

SDRC I-DEAS VI: FE_Modeling_&_Analysis 17-APR-92 15:49:37

Database: muonliftgfxt
View : No stored View
Task: Post Processing
Model: 1-FE MODEL1

Units : IN
Display : No stored Option
Model Bin: 1-MAIN
Associated Workset: 1-WORKING_SET1

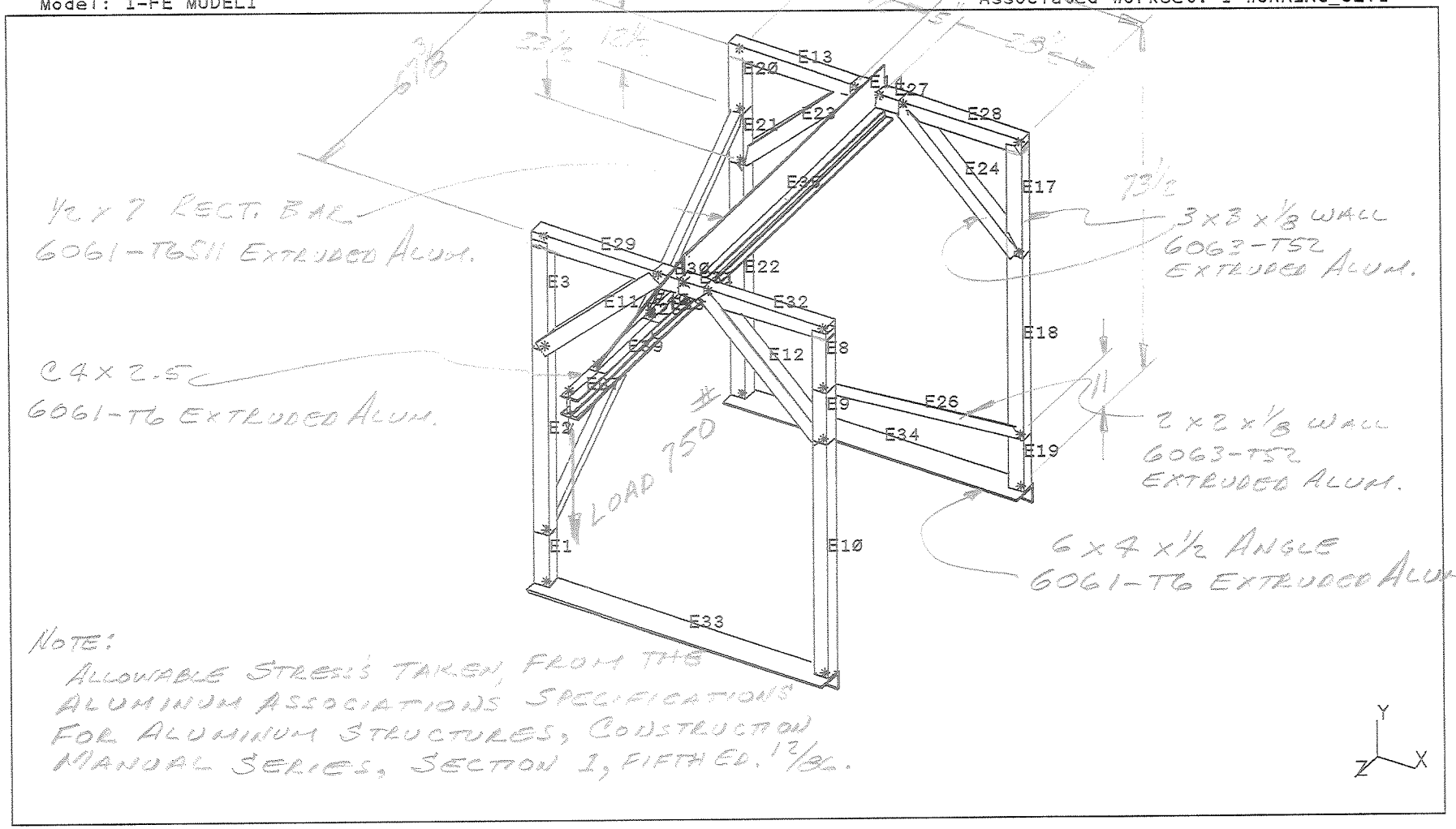

600 # MUON LIFTING FIXTURE.

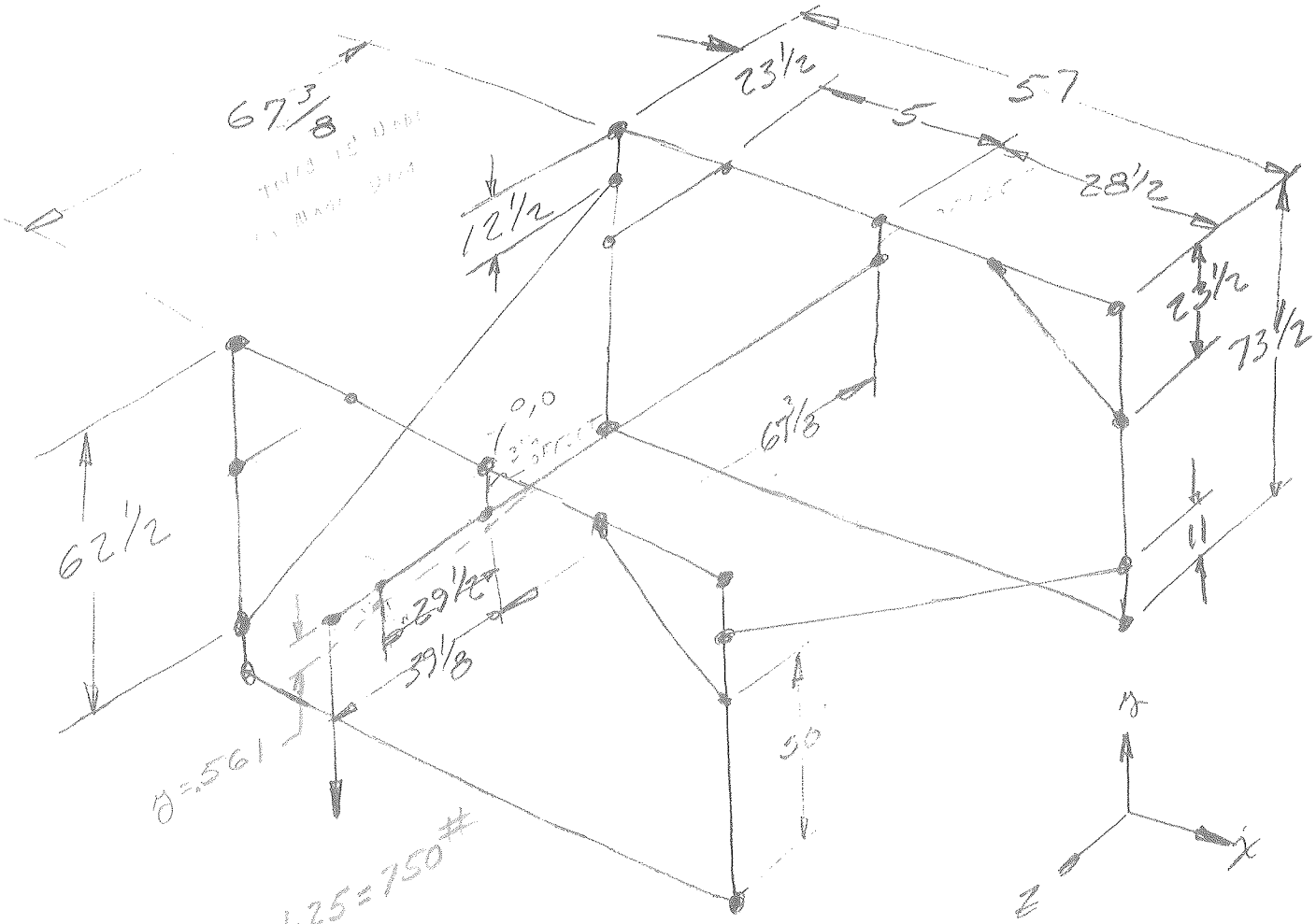

LOAD 600×1.25=750#

Pg #4

SDRC I-DEAS VI: FE_Modeling_&_Analysis

28-APR-92 16:20:10

Database: muonlftgfxt
View : No stored View
Task: Post Processing
Model: 1-FE MODEL1

Units : IN
Display : No stored Option
Model Bin: 1-MAIN
Associated Workset: 1-WORKING SET1

LOAD SET: 2 - 600#
FRAME OF REF: GLOBAL
STRESS - VON MISES MIN: 3.46E-10 MAX: 6494.51
CRITERION:ABOVE : 6492.00
SCALE: 1.00

3 x 3 x 1/8 WALL

$I = 1.984$

$A = 1.437$

$r = \sqrt{\frac{I}{A}} = 1.175$

$l = 10$

$\frac{l}{r} = 8.51$

$F_y = 6.5 \times 10^3$ Allowed

$S_1 = \left(\frac{B_c - F_{ayw}}{1.6 D_c}\right)^2$

$= 2.99 \times 10^3$

$S_2 = \left(\frac{C_c}{1.6}\right)^2$

$= 3.83 \times 10^3$

Since $\frac{l}{r} < S_1$

$F_c = \frac{F_{ayw}}{n_{vg}}$

$= 6.7 \times 10^3$ Allowed

where
$B_c = 17.3 \times 10^3$
$D_c = .072 \times 10^3$
$F_{ayw} = 11 \times 10^3$ Reduction < 1" Fillet welds
$C_c = 99$
$n_{vg} = 1.65$

From FEA @ E-31
$f_{vm} = 6.5 \times 10^3$ DESIGN

$\therefore f_{vm} < F_c$

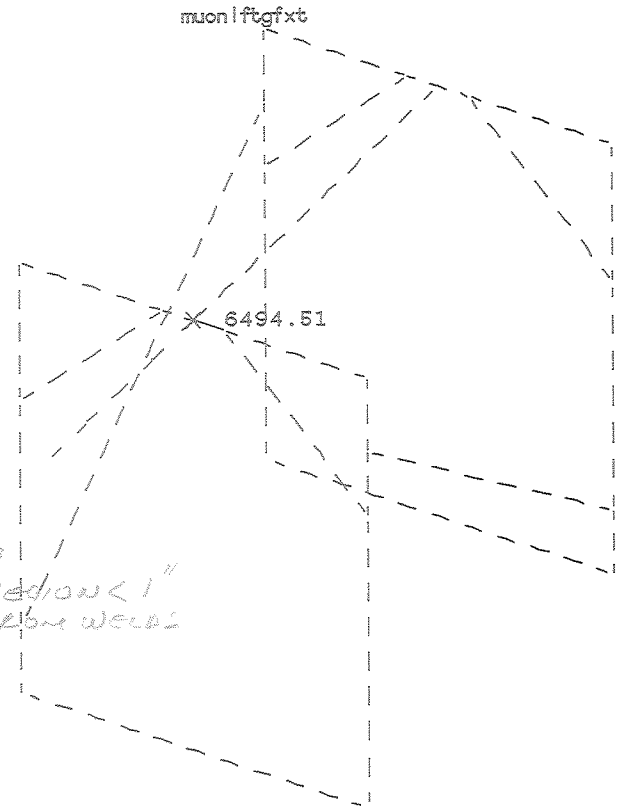

VALUE OPTION:ACTUAL

6494.51
6494.09
6493.67
6493.25
6492.84
6492.42
6492.00

Y
Z
X

Pg #5

SDRC I-DEAS VI: FE_Modeling_&_Analysis

28-APR-92 16:24:42

Units : IN

Database: muonlftgfxt
View : No stored View
Task: Post Processing
Model: 1-FE MODEL1

Display : No stored Option
Model Bin: 1-MAIN
Associated Workset: 1-WORKING SET1

LOAD SET: 2 - 600#
FRAME OF REF: GLOBAL
STRESS - MAX SHEAR MIN: 1.93E-10 MAX: 3601.70
CRITERION:ABOVE : 3601.00
SCALE: 1.00

3 x 3 x 1/8 WALL

$S_1 = \frac{B_s - F_{syw}}{1.25 D_s}$

$= 44.4$

$S_2 = \frac{C_s}{1.25}$

$= 99.2$

SINCE $\frac{h}{2t} = 12 < S_1$

THEN $F_v = \frac{F_{syw}}{m_y}$

$= 3.9 \times 10^3$ ALLOWED

& FROM FEA @ E-31

$f_v = 3.6 \times 10^3$ DESIGN

$\therefore f_v < F_v$

where
$B_s = 11 \times 10^3$
$F_{syw} = 6.5 \times 10^3$ REGION < 1" FROM WELDS
$D_s = .036 \times 10^3$
$C_s = 124$
$h = 3$
$t = .125$
$m_y = 1.65$

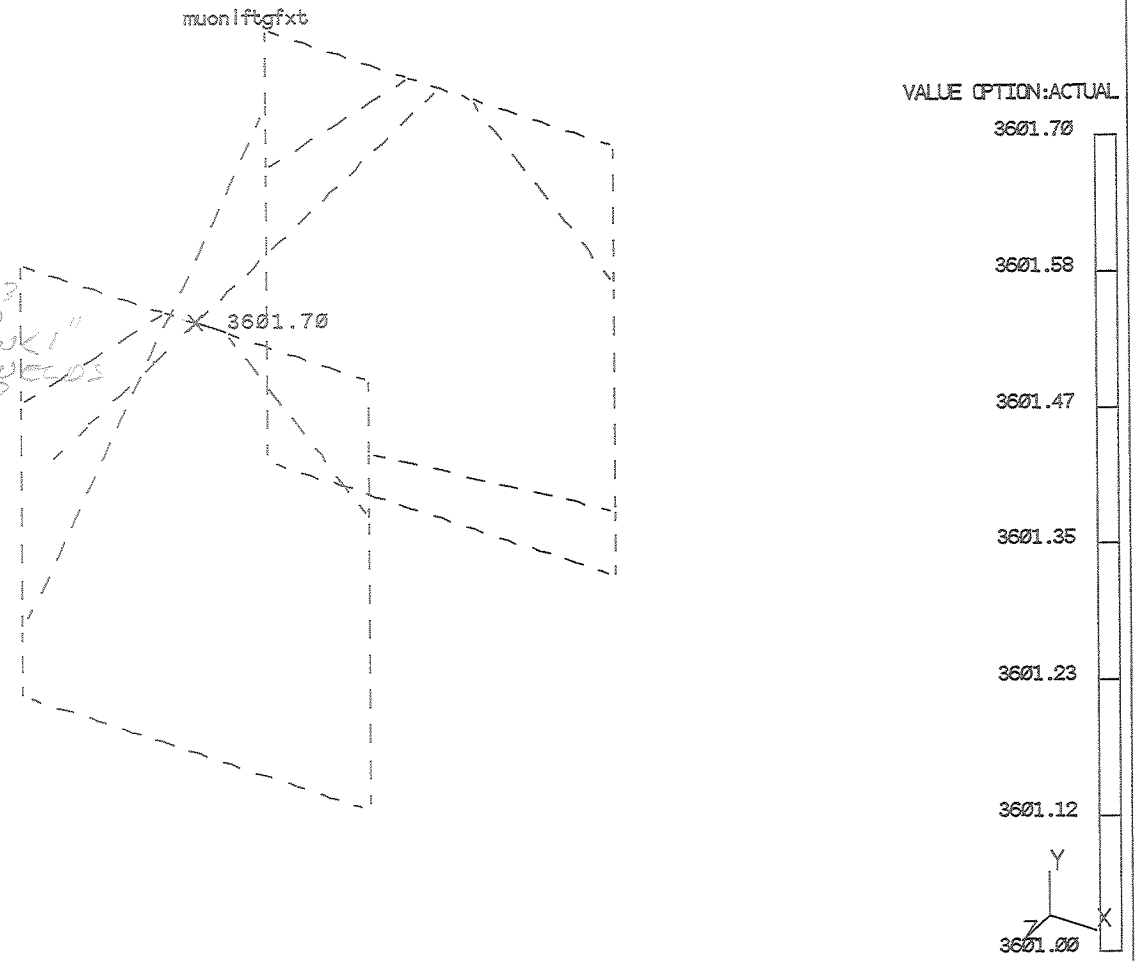

Pg #6

SDRC I-DEAS VI: FE_Modeling_&_Analysis

28-APR-92 16:42:53

Units : IN

Database: muonlftgfxt
View : No stored View
Task: Post Processing
Model: 1-FE MODEL1

Display : No stored Option
Model Bin: 1-MAIN
Associated Workset: 1-WORKING_SET1

LOAD SET: 2 - 600#
FRAME OF REF: ELEMENT
STRESS - X MIN:-414.75 MAX: 153.33
CRITERION:BELOW :-400.00
SCALE: 1.00

3 x 3 x 1/8 WALL

$$S_1 = \frac{B_c - \frac{n_u F_{cy}}{K_c n_y}}{D_c}$$

$= -22.3$

$S_2 = C_c = 99$

$\frac{l}{r} = 42.6$ (BETWEEN S_1 & S_2)

THEN

$$F_a = \frac{B_c - D_c\left(\frac{l}{r}\right)}{n_u}$$

$= 7.3 \times 10^3$ ALLOWED

& FROM FEA @ E-10

$f_a = -596$ DESIGN

$\therefore f_a < F_a$
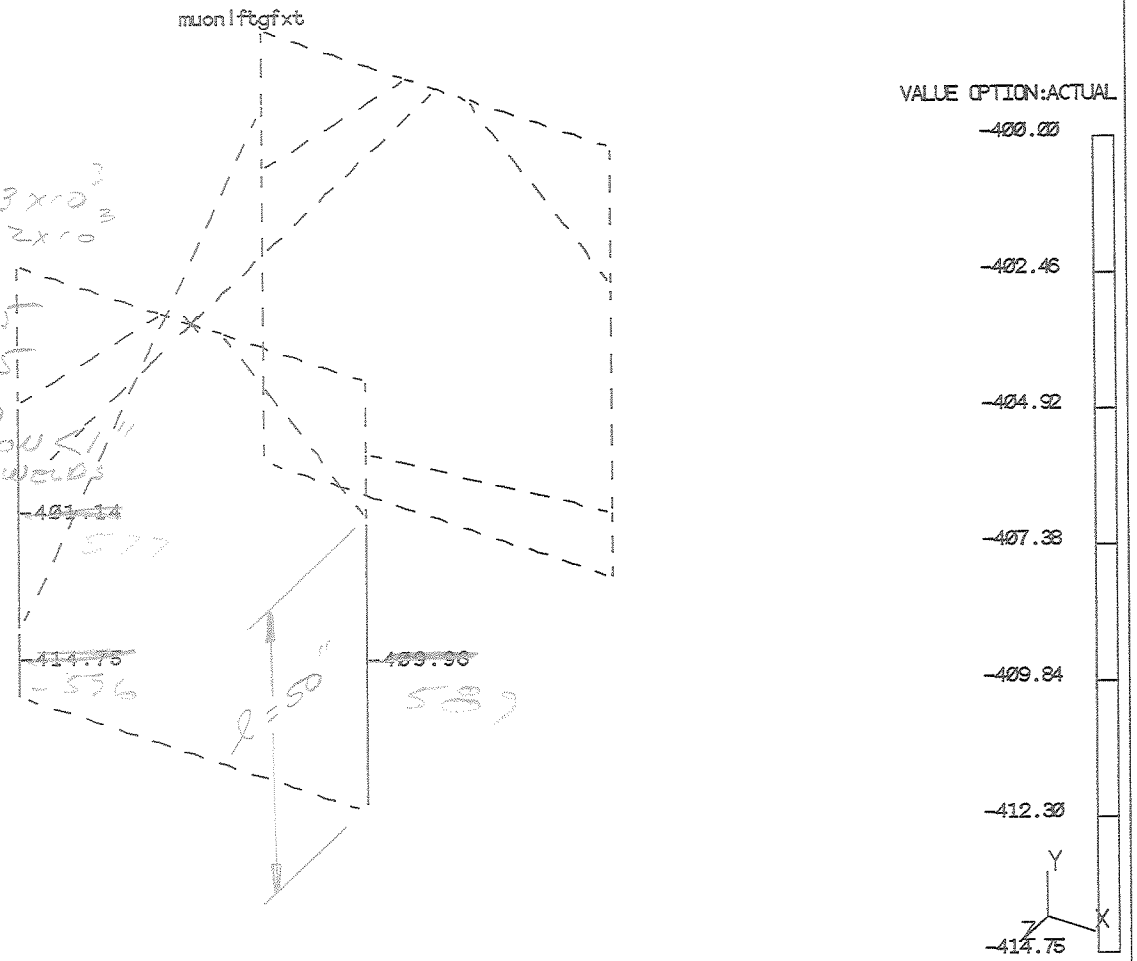
where
$B_c = 17.3 \times 10^3$
$D_c = .072 \times 10^3$
$C_c = 99$
$n_u = 1.95$
$n_y = 1.65$
$K_c = 1.0$
REGION < 1" FROM WELDS