LIFTING DEVICE

DEVICE NAME: PS1, 6 TON CRANE

ENGINEERING NOTE NUMBER: 42

APPLICABLE STANDARD: ASME B30.2-1990 OVERHEAD & GANTRY CRANES

RATED LOAD: 6 TON

TEST LOAD: 7.5 TON

TEST LOAD PERCENT: 125 %

LAST LOAD TEST DATE: 7/16/92

COLOR: YELLOW

STRESS CALCULATIONS:

Done by: E. M. VILLEGAS

Date: 4/6/92

Reviewed by: [signature]

Date: 4/24/92

REMARKS: LOAD TEST WAS ACCOMPLISHED BY USING TWO SHIELDING BLOCKS ('B' BLOCK = 10,150# & 'A' BLOCK = 5050#) FOR A TOTAL OF 15,200# (7.6 TON).
THE LOAD WAS MOVED THE ENTIRE LENGTH OF THE BEAM.
WITNESSING THE TEST WAS T. J. SARLINA D. CARPENTER & EM. VILLEGAS.

IDENTIFICATION:

Engineering Note Number & Rated Load Must be Clearly Marked On a Conspicuous Surface.

From "FNAL::ELAVALLIE"@RDCAE0 Fri Apr 24 16:35:16 1992
Received: from rdcea0.fnal.gov by rdmd05.fnal.gov via SMTP (920110.SGI/910805.SGI)
        for villegas id AA01713; Fri, 24 Apr 92 16:35:16 -0500
Date: Fri, 24 Apr 1992 16:32:55 -0500 (CDT)
From: "FNAL::ELAVALLIE"@RDCAE0
Message-Id: <920424163255.202009d8@RDCAE0.FNAL.GOV>
Subject: ID#42--PS1,6 Ton Crane
To: VILLEGAS
X-Vmsmail-To: VILLEGAS,KILMER,ELAVALLIE
Status: RO

The fixed/fixed column without an adjusting screw, is definitely the way to go for this kind of application.

I recommend that you go with it.

E.J.LaVallie

FERMILAB
ENGINEERING NOTE

SECTION	PROJECT	SERIAL-CATEGORY	PAGE
			2

SUBJECT: PS1 TH'D ROD COMPRESSION MEMBER SUPPORTING 6 TON HOISTS

NAME: E.M. Villegas

DATE: 3/27/92

REVISION DATE:

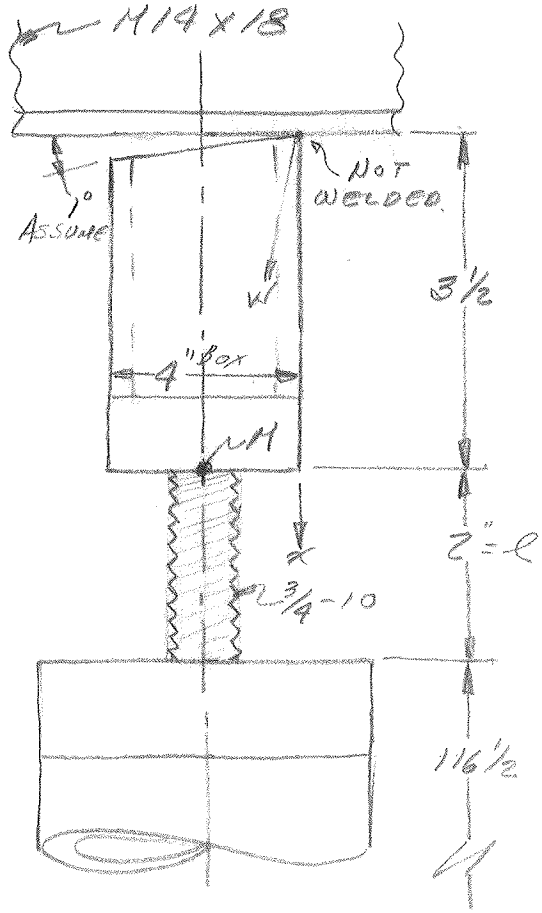

$W = 9{,}893^{\#}$ (SEE FEA MODEL Pg #7)

$M = 19.7 \times 10^3$ IN-LB

3/4-10 A36 STEEL TH'D. ROD.

$A_e = .334 \text{ IN}^2$

$d_r = .6906''$

$r = .160$

$I_e = .0083$

$$\frac{Kl}{r} = \frac{2.1 \times 2}{.160} = 26$$

$$C_c = \sqrt{\frac{2\pi^2 E}{F_y}} = 126$$

$$F_a = \frac{\left[1 - \frac{(Kl/r)^2}{2C_c^2}\right] F_y}{5/3 + \frac{3(Kl/r)}{8C_c} - \frac{(Kl/r)^3}{8C_c^3}}$$

$= 20.23 \times 10^3$ psi ALLOWED AXIAL COMP.

$$f_a = \frac{9893}{.334} = 29.5 \times 10^3 \text{ DESIGN AXIAL COMP.}$$

$f_a > F_a$

$F_b = .60 F_y = 21.6 \times 10^3$ ALLOWED

$$f_b = \left(\frac{Me}{I_e}\right) = 1{,}520 \times 10^3 \text{ DESIGN}$$

COMBINED AXIAL COMP. & BENDING

$$\frac{f_a}{F_a} + 2\left[\frac{C_m f_b}{\left(1 - \frac{f_a}{F'_e}\right) F_b}\right] \leq 1.0$$

where $C_m = .85$

$$F'_e = \frac{12\pi^2 E}{23(Kl/r)^2} = 224.2 \times 10^3$$

$139 \leq 1.0$

SEE Pg #9 FOR REDESIGN.

534393

FERMILAB
ENGINEERING NOTE

SECTION	PROJECT	SERIAL-CATEGORY	PAGE
			3

SUBJECT: PS1 ROOF LOAD

NAME: E.M. Dillman

DATE: 3/27/92

REVISION DATE:

ROOF LOAD

CORRUGATED STEEL	3 #/FT² (16 GA.)
5-PLY FELT & GRAVEL	6
TAR	6
INSULATION	2
SNOW, 5 FT.	40
TOTAL	57 #/FT²
say	60 #/FT²

ROOF LOAD ON LIFTING AREA

$$W_R = \frac{60^{\#} \times 240'' \times 353''}{12 \times 12} = 35.3 \times 10^3 \#$$

SUPPORTING BEAM WT.

$$W_B = \frac{353 \times 18 \times 5}{12} + \frac{288 \times 77}{12} = 4.5 \times 10^3$$

TOTAL LOAD — 39.8×10^3 #

LOAD/BEAM — 8.0×10^3 #

LOAD/LINEAR INCH — = 22.55 #/IN

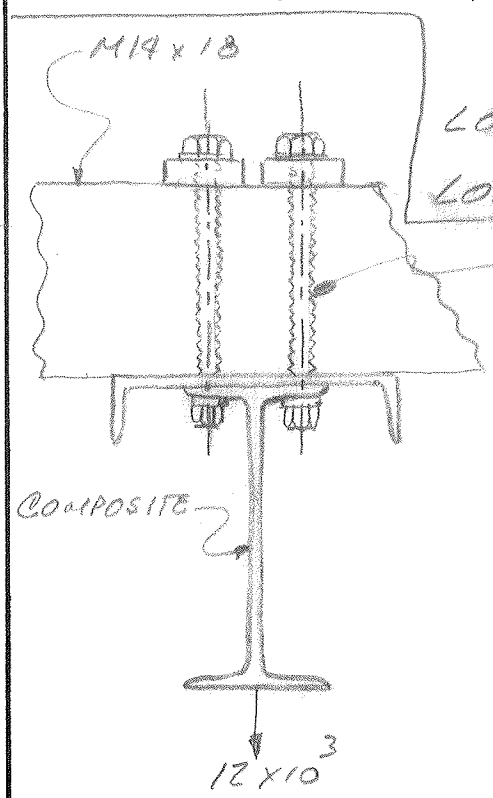

(4) 3/4-10 THD. ROD HANGARS PER INTERSECTION

$F_t = .60\ F_y$
21.6×10^3 psi
ALLOWED

$$f_t = \frac{12 \times 10^3}{4 \times .33\,\pi}$$
$= 9.0 \times 10^3$ psi
DESIGN

$\therefore f_t < F_t$

534393

FERMILAB
ENGINEERING NOTE

SECTION	PROJECT	SERIAL-CATEGORY	PAGE
			4

SUBJECT: PS1 STRUCTURAL MEMBERS SUPPORTING TWO 3 TON HOISTS

NAME: E.M. Villegas

DATE: 3/30/92

REVISION DATE:

y = .117 @ PT # 1

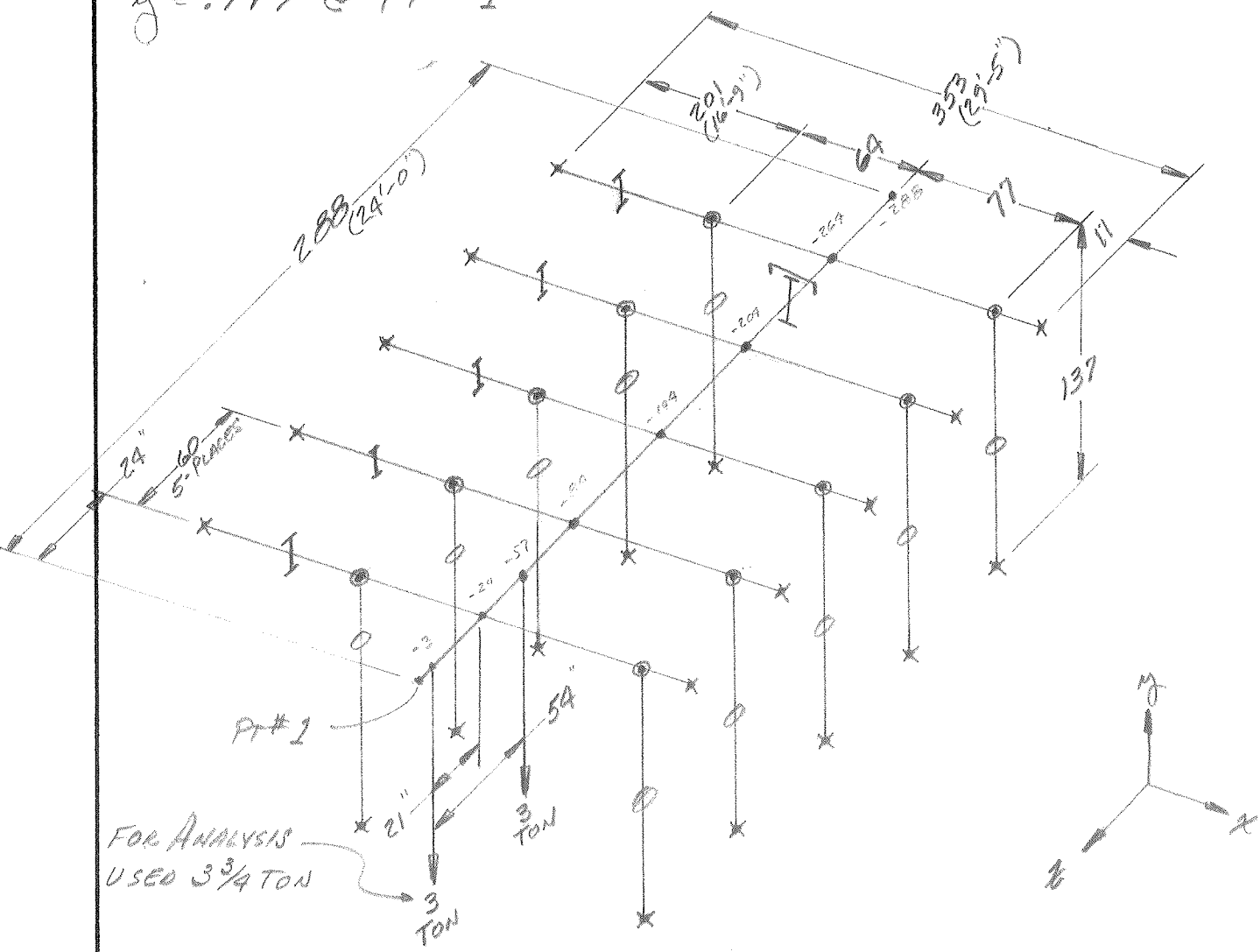

x – RIGID RESTRAINT = 0

◎ – JOINT RELEASE = Y FIXED, REST FREE

• – NO RELEASE = NULL

⊤ – COMPOSITE S15 x 42.9 & C15 x 33.9

I – M14 x 18

O – 3 PIPE, SCH 40

DISTRIBUTED LOAD ON 'I' BEAM = 22.55 #/IN

534393

Pg # 5

SDRC I-DEAS V: FE_Modeling_&_Analysis

31-MAR-92 17:21:05

Database: ps1
View : No stored View
Task: Post Processing
Model: 1-FE MODEL1

Units : IN
Display : No stored Option
Model Bin: 1-MAIN
Associated Workset: 1-WORKING_SET1

ps1

LOADCASE:1
FRAME OF REF:GLOBAL
STRESS - VON MISES MIN: 7.08E-16 MAX: 12930.00
CRITERION:ABOVE : 5000.00
SCALE: 10.00

$F_b = .60 F_y$

$= 21.6 \times 10^3$ Allowed

$f_c = 12.9 \times 10^3$ Actual

$\therefore f_c < F_b$

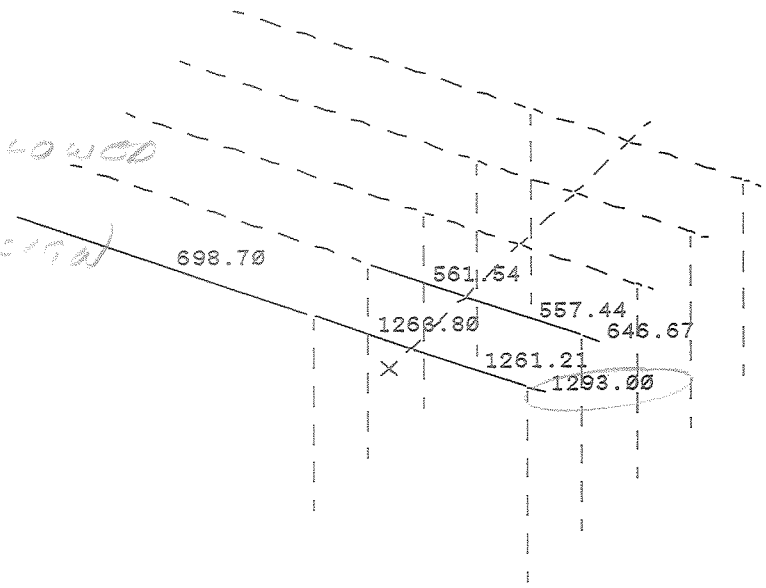

VALUE OPTION:ACTUAL

12930.01
11608.34
10286.67
8965.01
7643.34
6321.67
5000.00

Pg #6

SDRC I-DEAS V: FE_Modeling_&_Analysis 31-MAR-92 17:30:00

Database: ps1
View : No stored View
Task: Post Processing
Model: 1-FE MODEL1

Units : IN
Display : No stored Option
Model Bin: 1-MAIN
Associated Workset: 1-WORKING_SET1

ps1

LOADCASE:1
FRAME OF REF:GLOBAL
STRESS - MAX SHEAR MIN: 3.84E-16 MAX: 7003.44
CRITERION:ABOVE : 5000.00
SCALE: 1.00

$F_v = .40 F_y$
$= 14.4 \times 10^3$ Allowed

$f_{v_c} = \sqrt{\left[\left(f_{b_z}^2 + f_{b_{y_c}}^2\right)^{1/2} + |f_a|\right]^2 + 4\tau^2}$

$= 7.0 \times 10^3$ Desired

$\therefore f_{v_c} < F_v$

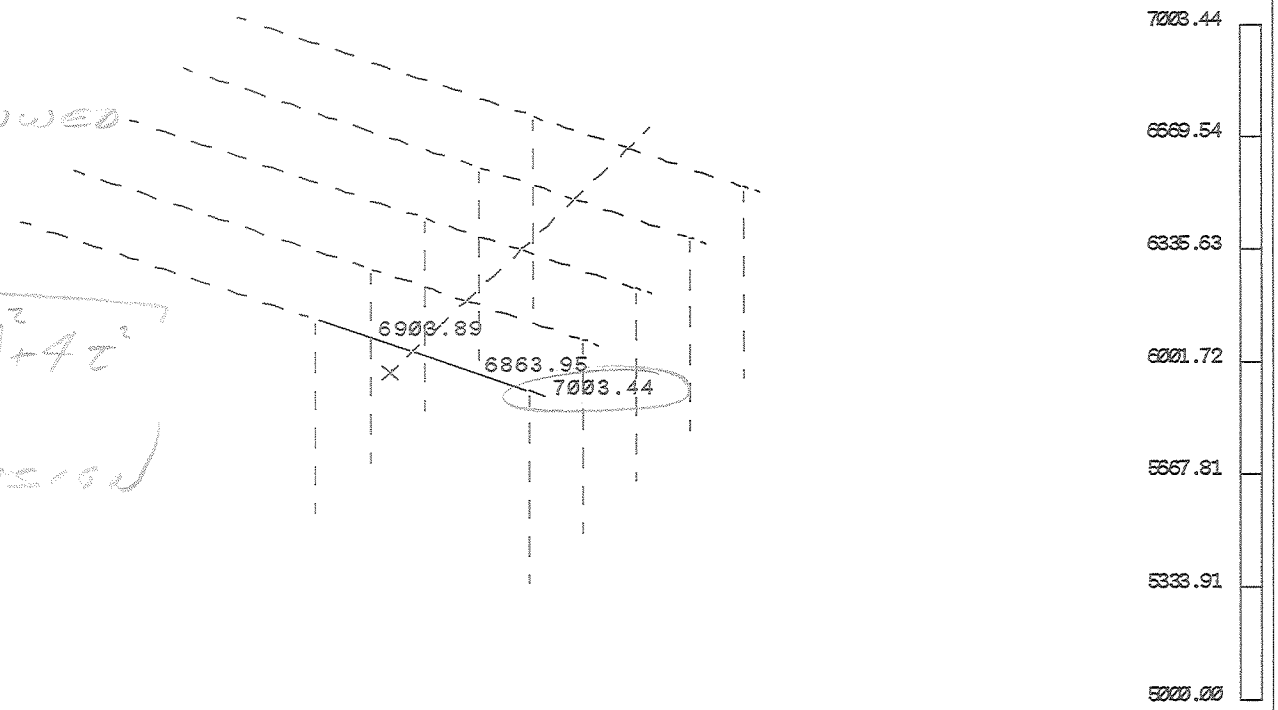

Pg #1

SDRC I-DEAS VI: FE_Modeling_&_Analysis 06-APR-92 08:59:57

Database: ps1
View : No stored View
Task: Post Processing
Model: 1-FE MODEL1

Units : IN
Display : No stored Option
Model Bin: 1-MAIN
Associated Workset: 1-WORKING_SET1

ps1

LOAD SET: 1 - TOTALLOAD
FRAME OF REF: ELEMENT
ELEM FORCE - MAG MIN: 7.16E-13 MAX: 9842.71
CRITERION:ABOVE : 3000.00
SCALE: 1.00

3 PIPE SCH 40 (3½00 x .216 WALL)

SEE Pg #3 FOR REDESIGN ANALYSIS

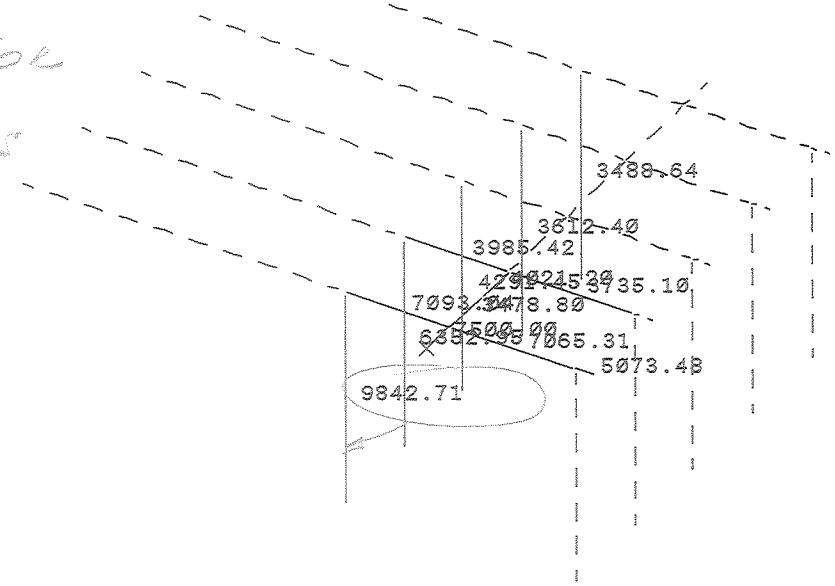

VALUE OPTION:ACTUAL

9842.72
8702.26
7561.81
6421.36
5280.91
4140.45
3000.00

FERMILAB
ENGINEERING NOTE

SECTION	PROJECT	SERIAL-CATEGORY	PAGE
			8

SUBJECT: PS 1, 6 TON CAPACITY CRANE
EXISTING AXIALLY LOAD COMPRESSION COLUMN

NAME: E. M. Villegas

DATE: 4/3/92

REVISION DATE:

3" PIPE, SCH. 40

O.D. = 3.5
I.D. = 3.068
WALL = .216
A = 2.23
I = 3.02
r = 1.164
ℓ = 137"
K = 2.10
W = 9,843# AXIAL LOAD FROM FEA MODEL Pg 7

$$C_c = \sqrt{\frac{2\pi^2 E}{F_y}}$$

$$= 126$$

$$\frac{K\ell}{r} = \frac{2.1 \times 137}{1.164}$$

$$= 247$$

SINCE

$$\frac{K\ell}{r} > C_c$$

THEN

$$F_a = \frac{12\pi^2 E}{23(K\ell/r)^2}$$

$$= 2.4 \times 10^3 \text{ psi ALLOWED}$$

FROM FEA MODEL, Pg #7

$$f_a = \frac{9,843}{2.23}$$

$$= 4.4 \times 10^3 \text{ psi DESIGN}$$

$\therefore f_a > F_a$ A DEFINITE NO-NO!
SEE Pg #9 FOR REDESIGN

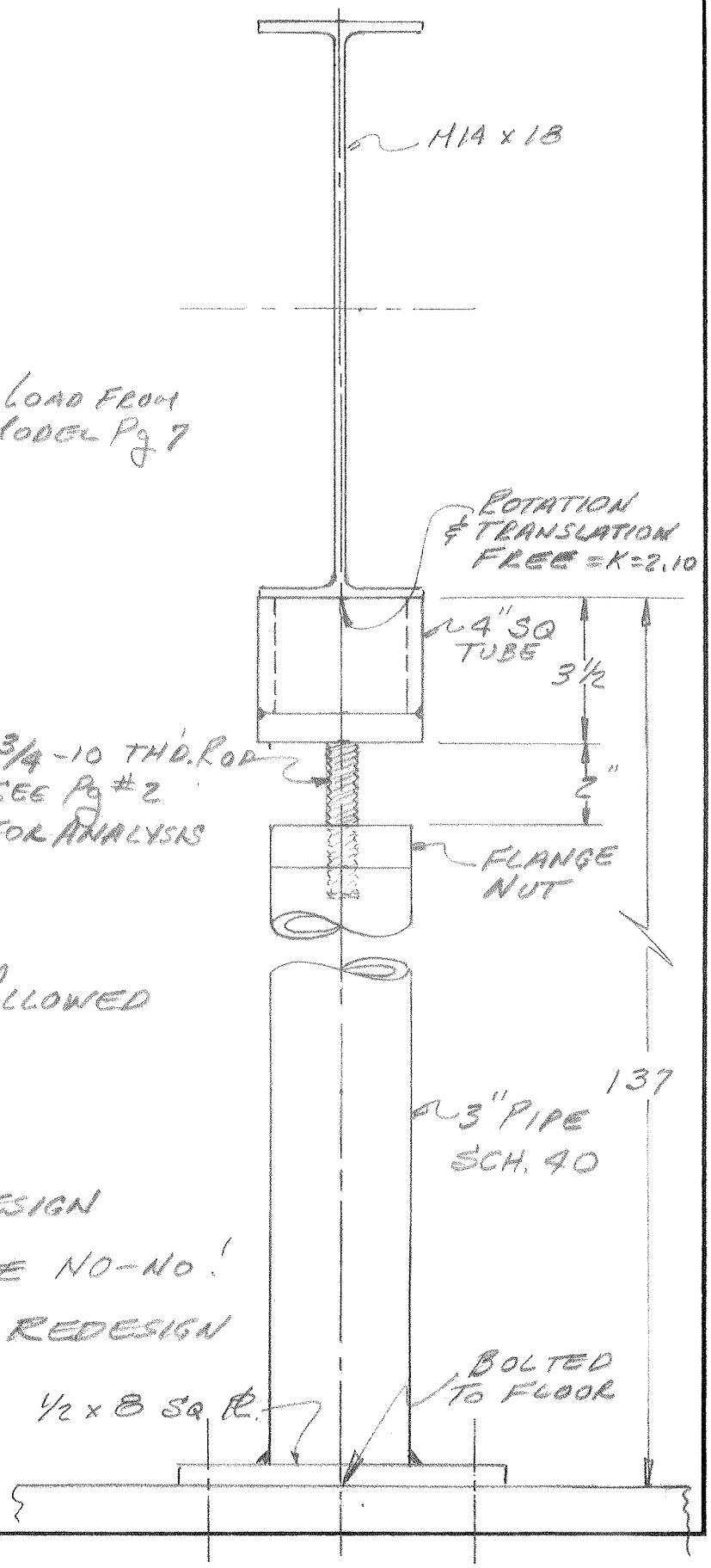

534393

FERMILAB
ENGINEERING NOTE

SECTION	PROJECT	SERIAL-CATEGORY	PAGE
			9

SUBJECT: PS 1, 6 TON CAPACITY CRANE
REDESIGN AXIALLY LOAD COMP. COLUMN

NAME: E. M. Dillegan
DATE: 4/3/92
REVISION DATE:

ALL 3" PIPE VALUES THE SAME AS ON Pg #8, EXCEPT $K = .65$

$$\therefore \frac{Kl}{r} = \frac{.65 \times 137}{1.169} = 77$$

SINCE

$$\frac{Kl}{r} < C_c$$

THEN

$$F_a = \frac{\left[1 - \frac{(Kl/r)^2}{2C_c^2}\right]F_y}{\frac{5}{3} + \frac{3(Kl/r)}{8C_c} - \frac{(Kl/r)^3}{8C_c^3}}$$

$= 15.7 \times 10^3$ psi ALLOWED

& FROM Pg #8

$f_a = 9.9 \times 10^3$ psi DESIGN

$\therefore f_a < F_a$

WELD SIZE

$F_v = \sin 45^\circ \times .30 \times 72 \times 10^3$
$= 15.3 \times 10^3$ #/in ALLOWED

$f_v = \frac{w}{l_w} = \frac{9873}{3.5\pi}$
$= 895$ #/in DESIGN

$\therefore w = \frac{f_v}{F_v} = .058''$ LEG SIZE REQ'D. FOR STRENGTH.

BUT $w = 3/16$ MIN. LEG SIZE REQ'D. FOR PROPER HEAT INPUT BASE ON MAT'L THICKNESS.

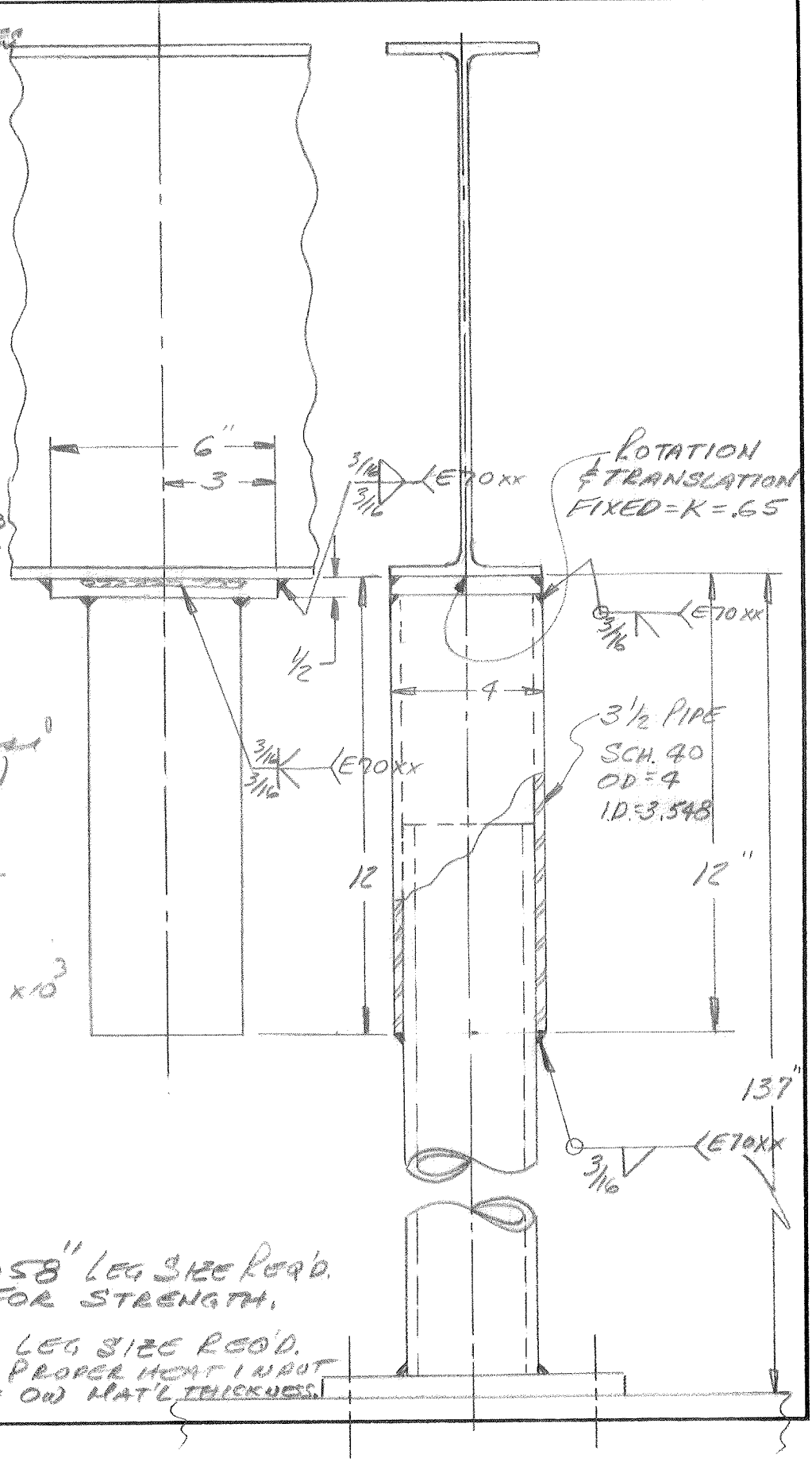

534393

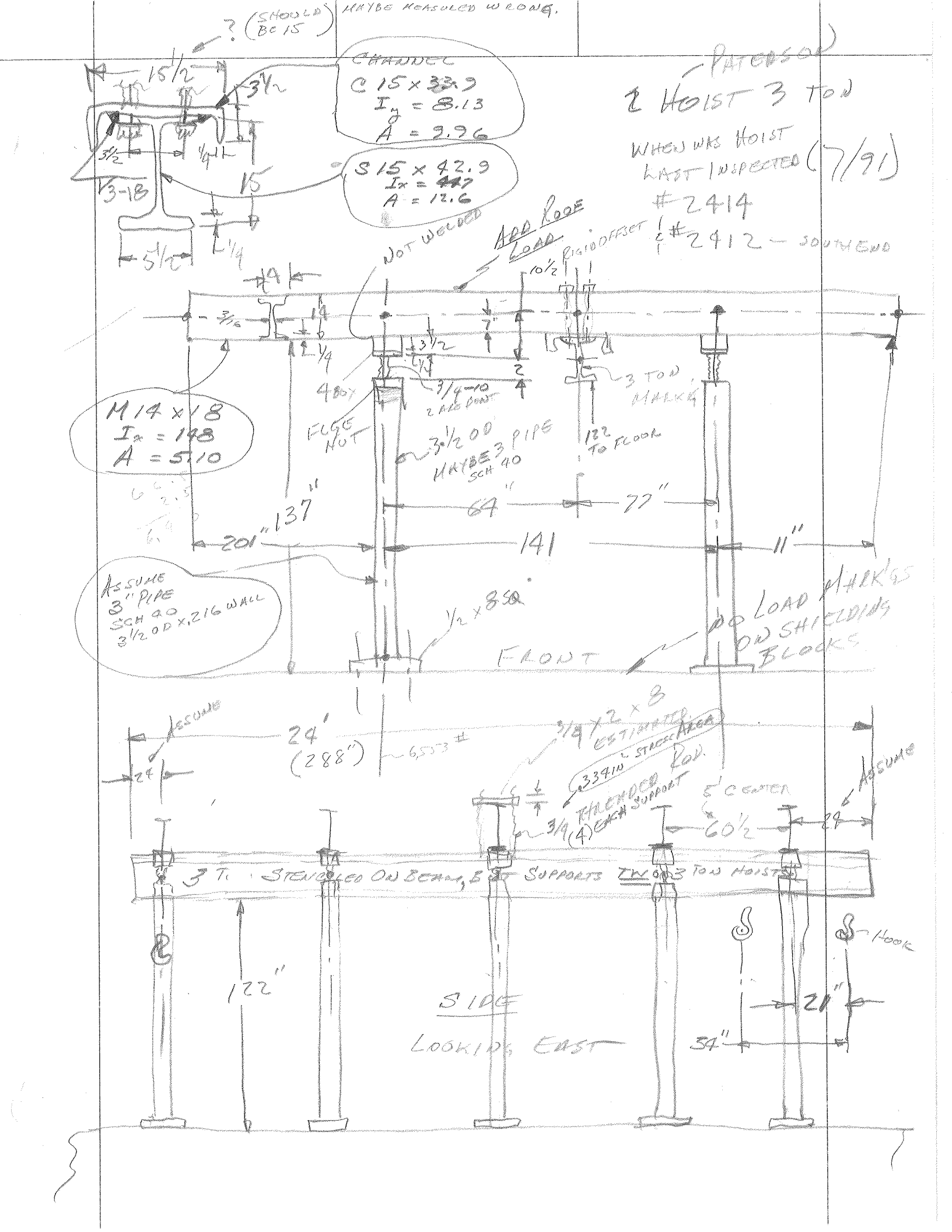

MAYBE MEASURED WRONG.
? (SHOULD BE 15)
15 1/2
3 1/2
CHANNEL
C 15 x 33.9
I_y = 8.13
A = 9.96
S 15 x 42.9
I_x = 447
A = 12.6
3-18
15
5 1/2
1/4
PATERSON
2 HOIST 3 TON
WHEN WAS HOIST LAST INSPECTED (7/91)
#2414
#2412 — SOUTH END
NOT WELDED
ADD ROOF LOAD
RIGID OFFSET
10 1/2
14
3/16
7"
3 1/2
2
4 BOX
3/4-10 2 ARE DONT
3 TON MARK'G
FLGE NUT
3 1/2 OD MAYBE 3 PIPE SCH 40
122 TO FLOOR
M 14 x 18
I_x = 148
A = 5.10
137"
64"
77"
201"
141
11"
ASSUME 3" PIPE SCH 40 3 1/2 OD x .216 WALL
1/2 x 8 SQ
FRONT
NO LOAD MARK'GS ON SHIELDING BLOCKS
ASSUME
24'
(288")
6,553 #
3/4 x 2 x 8 ESTIMATED
.334 IN² STRESS AREA
THREADED ROD
3/4 (4) EACH SUPPORT
5' CENTER
60 1/2
24
ASSUME
3 T. STENCILED ON BEAM, BUT SUPPORTS TWO 3 TON HOISTS
HOOK
122"
SIDE
LOOKING EAST
21"
34"

PARNOOO5 FERMILAB PACKING LIST

REQUESTORS COPY

DATE CHECKED: 06/11/1992 LOGGED: 06/11/1992 REF NUM: 136 RECEIVED: 06/11/1992
REQUESTOR: VILLEGAS
REQ: 74597-00 EXT: 3686 DELIVER: DON CARPENTER MAB

VENDOR: RYERSON STEEL CHICAGO IL
PURCHASE ORDER: M17110-00

********** QUANTITIES THIS RECEIPT **********

ORDERED	UM	QTY	UM	ALTERNATE RECEIPT QUANTITES	DUE	UM
10	FT	10.000	FT		0.000	FT
		3-1/2 PIPE, SCH. 40 (4 O.D. X .226 WALL) ASTM A53 TYPE F				

15,200 lb. LOAD OFF FLOOR

LOAD BEING MOVED THE ENTIRE LENGTH OF BEAM.

SIGN TO BE REMOVE

3 TON CAP TO BE CHANGED TO 6 TON CAP.