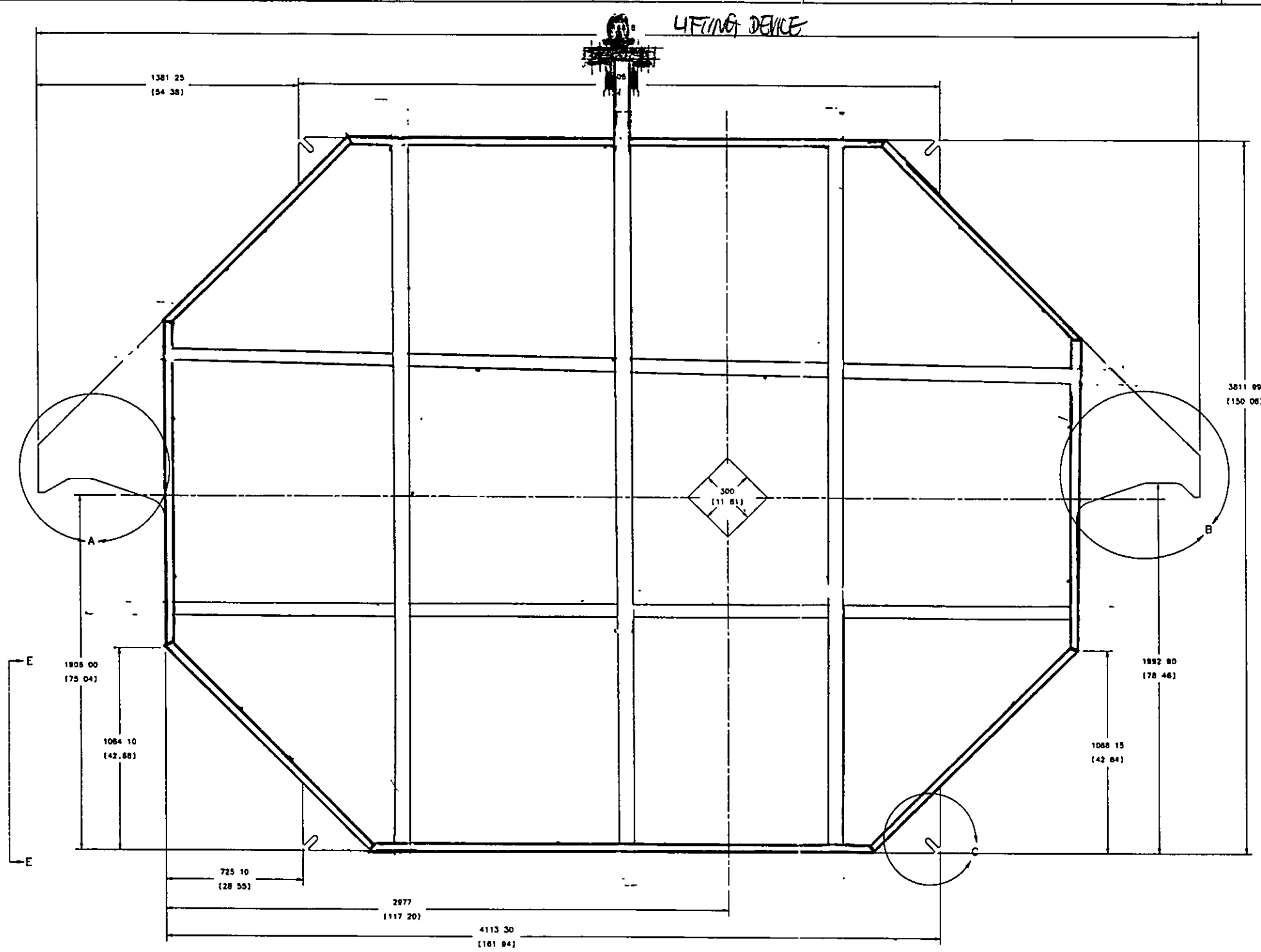

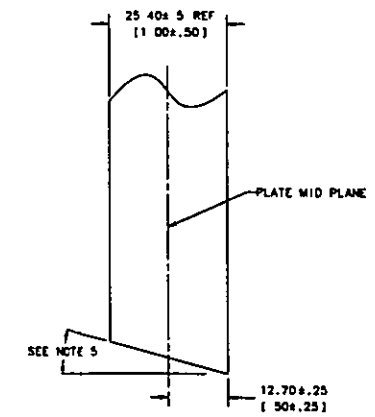

VIEW E-E
SCALE NONE

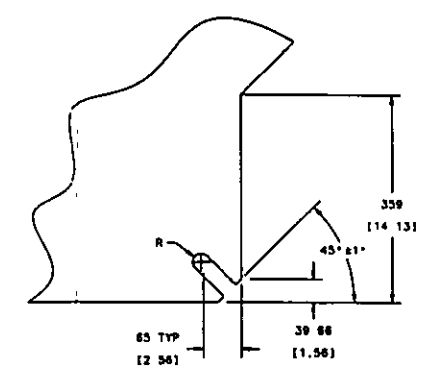

DETAIL C
SCALE 1/4

9) ALL DIMENSION ARE IN MILLIMETERS AND INCHES

8) APPROX WEIGHT = 3426 4 Kgm(7555 LBS)

7) FABRICATION AND HANDLING OF PARTS SHALL CONFORM TO FERMILAB SPEC 9216 000-SA-367185. ANY DEVIATION FROM THIS SPECIFICATION SHALL BE SUBMITTED TO FERMILAB FOR PRIOR APPROVAL

6) MATERIAL SHALL CONFORM TO FERMILAB SPEC 9216 000-SA-367184

5) THE ANGLE CAUSED BY THE CUTTING OPERATION IS TO BE MINIMIZED THIS ANGLE, ONCE DETERMINED BY THE VENDOR, IS TO BE CONSISTANT WITHIN ±2° FOR ALL MINOS PLATES

4) ALL DIMENSION ORIGINATE FROM THE PLATE MID PLANE AS DEFINED IN VIEW D-D.

3) BREAK EDGES 0.8-1 5 R OR CHAM

2) SURFACE TEXTURE DEFINITIONS PER ANSI/ASME B46 1-1995. SURFACE TEXTURE SYMBOLS PER ANSI Y14 36-1978.

1) DIMENSIONING AND TOLERANCING PER ASME Y14 5M-1994

NOTES, UNLESS OTHERWISE SPECIFIED.

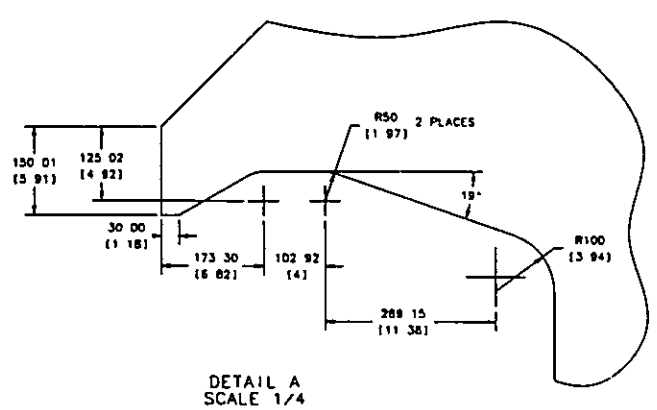

DETAIL A
SCALE 1/4

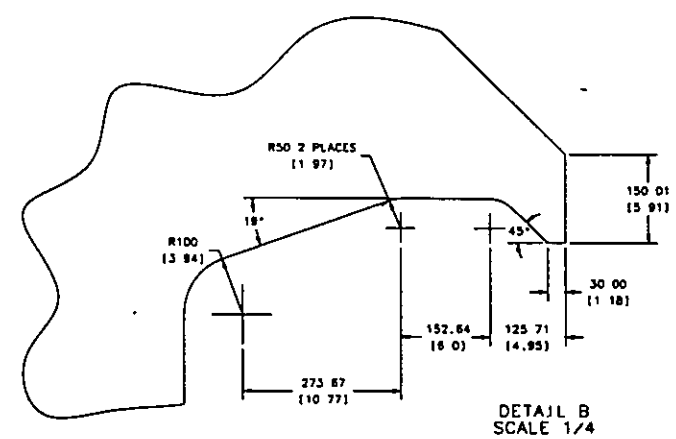

DETAIL B
SCALE 1/4

ITEM NO	PART NO	DESCRIPTION OR SIZE	QTY REQ

PARTS LIST

UNLESS OTHERWISE SPECIFIED	DRAWN	JIM KILMER 5/98
.XX .XXX ANGLES	CHECKED	TINA KUBICKA 5/27/98
± -- ± -- ± .5°	ENGINEER	
1 BREAK ALL SHARP EDGES	APPROVED	
2 SURFACE FINISH PER ANSI B46.1	WORK ORDER	
3 INTERPRETATION OF DIMENSIONS AND TOLERANCES PER ASME Y14.5M-1994	MATERIAL	1" THICK SAE 1006 LOW CARBON STEEL
4 ALL DIMENSIONS ARE IN INCHES		
250 √ MAX ALL REMAINING SURFACES		

FERMI NATIONAL ACCELERATOR LABORATORY
UNITED STATES DEPARTMENT OF ENERGY

PPD/MECHANICAL SUPPORT
MINOS
NEAR DETECTOR STEEL

SCALE	DRAWING NUMBER	SHEET NO.	REV
1/8 & NOTED	9213.300-ME-367179	1 OF 1	

SEP 1998

[redacted]FIND THE DESIGN LOAD FOR LIFTING DEVICE :

From the previous Study, know :

1) Scintillator weight = 308 lb (full scintillator)
2) Detector plate weight = 7600 lb
3) Strongback frame weight = 2830 lb
4) Strongback connections weight = 1652 lb
5) Strongback pivot rollers weight = 471 lb
6) Strongback ear support weight = 180 lb
7) Strongback damping Device weight = 142 lb
8) Strongback supporting lip weight = 46 lb
9) Strongback Lifting Lug weight = 31 lb

total weight = 308 + 7600 + 2830 + 1652 + 471 + 180 + 142 + 46 + 31

= 13260 lb

— Hoist Rings :

USE CAST STEEL HOIST RING. McMaster-Carr 3052774

$342.39/ea

Capacity : 24000 lb

This ring pivots 180° and swivels 360°
to compensate for pitch, roll and sway
when Lifting unbalanced loads.

Bolt size :
1½"-6

Hoist Rings

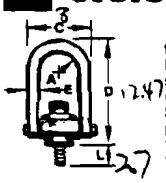

Rings pivot 180° and swivel 360° to compensate for pitch, roll, and sway when lifting unbalanced loads. We offer hoist rings in industry-standard cast steel, economical one-piece forged steel, and metric drawn steel. Load ratings are for lifts in any direction. **SAFETY NOTE: Some loosening may develop after prolonged service in a permanent installation. Retighten mounting screws periodically to maintain the specified torque.**

Replacement bolts come complete with clip.

CAST STEEL—Also available: longer inside radius rings and ticad plated rings. **Please specify 3052T999 and requirements.**

◆ Also available in Type 300 series stainless steel. Please specify 2949T888 and requirements. The work load limit for stainless steel rings is about 50% less than cast steel rings.

DROP-FORGED STEEL—These rings meet MIL-STD 1365 (11) or MIL-STD 209C.

METRIC—Meet MIL-STD 1365A.

Bolt Size	Thread Torque, Ft.-Lbs.	Dimensions A	C	D	E	L	Work Load Limit, Lbs.	Hoist Ring	Each	Replacement Bolt	Each
Cast Steel Hoist Rings											
5/16"-18	7	0.43"	1.61"	2.67"	0.375"	0.29"	800	3052T102	$60.31	3052T21	$5.81
5/16"-18	7	0.43"	1.61"	2.67"	0.375"	0.54"	800	3052T55 ◆	60.31	3052T21	5.81
3/8"-16	12	0.43"	1.61"	2.67"	0.375"	0.54"	1,000	3052T56 ◆	60.31	3052T22	5.81
1/2"-13	28	0.70"	2.40"	3.77"	0.50"	1.07"	2,500	3052T57	73.33	3052T23	7.71
1/2"-13	28	0.88"	3.25"	4.78"	0.75"	1.03"	2,500	3052T72	74.47	3052T23	7.71
1/2"-13	28	0.88"	3.25"	6.72"	0.75"	1.03"	2,500	3052T87	80.14	3052T23	7.71
1/2"-13	28	0.88"	3.25"	4.78"	0.75"	0.78"	2,500	3052T58	74.47	3052T24	7.71
1/2"-13	28	0.88"	3.25"	6.72"	0.75"	0.78"	2,500	3052T86	80.14	3052T24	7.71
1/2"-13	28	0.88"	3.25"	4.78"	0.75"	1.28"	2,500	3052T81 ◆	77.52	3052T26	7.71
1/2"-13	28	0.88"	3.25"	6.72"	0.75"	1.28"	2,500	3052T88	80.14	3052T26	7.71
5/8"-11	60	0.88"	3.25"	4.78"	0.75"	0.78"	4,000	3052T73	72.58	3052T27	8.93
5/8"-11	60	0.88"	3.25"	4.78"	0.75"	1.03"	4,000	3052T59	74.22	3052T28	8.93
5/8"-11	60	0.88"	3.25"	6.72"	0.75"	1.03"	4,000	3052T89	80.14	3052T28	8.93
5/8"-11	60	0.88"	3.25"	4.78"	0.75"	1.28"	4,000	3052T61 ◆	74.22	3052T29	8.93
5/8"-11	60	0.88"	3.25"	6.72"	0.75"	1.28"	4,000	3052T91	80.14	3052T29	8.93
3/4"-10	100	0.88"	3.25"	4.78"	0.75"	1.03"	5,000	3052T62	74.22	3052T31	11.97
3/4"-10	100	0.88"	3.25"	6.72"	0.75"	1.03"	5,000	3052T92	80.14	3052T31	11.97
3/4"-10	100	0.88"	3.25"	4.78"	0.75"	1.53"	5,000	3052T63 ◆	74.22	3052T32	13.06
3/4"-10	100	0.88"	3.25"	6.72"	0.75"	1.53"	5,000	3052T93	80.14	3052T32	13.06
3/4"-10	100	1.40"	4.80"	6.52"	1"	1.04"	7,000	3052T64	154.33	3052T33	13.12
3/4"-10	100	1.40"	4.80"	8.11"	1"	1.04"	7,000	3052T94	170.53	3052T33	13.12
3/4"-10	100	1.40"	4.80"	6.52"	1"	1.54"	7,000	3052T82 ◆	164.22	3052T34	14.06
3/4"-10	100	1.40"	4.80"	8.11"	1"	1.54"	7,000	3052T95	170.53	3052T34	14.06
7/8"-9	160	1.40"	4.80"	6.52"	1"	1.04"	8,000	3052T65 ◆	167.67	3052T35	18.06
7/8"-9	160	1.40"	4.80"	8.11"	1"	1.04"	8,000	3052T96	177.63	3052T35	18.06
1"-8	230	1.40"	4.93"	6.52"	1"	1.29"	10,000	3052T66	166.23	3052T36	20.42
1"-8	230	1.40"	4.93"	8.11"	1"	1.29"	10,000	3052T97	177.63	3052T36	20.42
1"-8	230	1.40"	4.93"	6.52"	1"	1.54"	10,000	3052T67	169.69	3052T37	20.97
1"-8	230	1.40"	4.93"	8.11"	1"	1.54"	10,000	3052T98	177.63	3052T37	20.97
1"-8	230	1.40"	4.93"	6.52"	1"	2.29"	10,000	3052T83 ◆	177.14	3052T38	28.27
1"-8	230	1.40"	4.93"	8.11"	1"	2.29"	10,000	3052T101	177.63	3052T38	28.27
1 1/4"-7	470	1.75"	6"	8.73"	1.25"	1.89"	15,000	3052T68	274.95	3052T39	54.28
1 1/2"-6	800	2.25"	8"	12.47"	1.75"	2.70"	24,000	3052T74	342.30	3052T41	97.84
2"-4 1/2	800	2.25"	8"	12.47"	1.75"	2.96"	30,000	3052T69	427.08	•	
2 1/2"-8	2100	3"	10.50"	16.87"	2.25"	4"	50,000	3052T77	1292.04	•	
2 1/2"-4	2100	3"	10.50"	16.87"	2.25"	4"	50,000	3052T75	1292.04	•	
3"-4	4300	3.75"	13"	19.50"	2.75"	5.20"	75,000	3052T76	2158.22	•	
Drop-Forged Steel Hoist Rings											
5/16"-18	7	0.65"	2.29"	3.23"	0.44"	0.56"	800	2994T61	$52.50	2994T15	$4.23
5/16"-18	7	0.65"	2.29"	3.23"	0.44"	1.06"	800	2994T62	52.50	2994T16	4.80
3/8"-16	12	0.65"	2.29"	3.23"	0.44"	0.56"	1,000	2994T63	52.50	2994T17	4.23
3/8"-16	12	0.65"	2.29"	3.23"	0.44"	1.06"	1,000	2994T64	52.50	2994T18	4.80
1/2"-13	28	0.88"	3.13"	4.71"	0.75"	1"	2,500	2994T65	61.24	2994T19	9.57
1/2"-13	28	0.88"	3.13"	4.71"	0.75"	1.25"	2,500	2994T66	61.24	2994T21	9.57
5/8"-11	60	0.88"	3.13"	4.71"	0.75"	1"	4,000	2994T67	63.60	2994T22	10.23
5/8"-11	60	0.88"	3.13"	4.71"	0.75"	1.25"	4,000	2994T68	63.60	2994T23	10.23
3/4"-10	100	0.88"	3.13"	4.71"	0.75"	1"	5,000	2994T69	64.83	2994T24	10.77
3/4"-10	100	0.88"	3.13"	4.71"	0.75"	1.50"	5,000	2994T71	66.08	2994T25	10.77
3/4"-10	100	1.40"	5.10"	7"	1"	1.20"	7,000	2994T72	124.67	2994T26	13.80
3/4"-10	100	1.40"	5.10"	7"	1"	1.70"	7,000	2994T73	126.78	2994T27	14.46
7/8"-9	160	1.40"	5.10"	7"	1"	1.20"	8,000	2994T74	126.78	2994T28	18.57
1"-8	230	1.40"	5.10"	7"	1"	1.45"	10,000	2994T75	129.33	2994T29	21.00
1"-8	230	1.40"	5.10"	7"	1"	1.70"	10,000	2994T76	131.53	2994T31	21.98
1"-8	230	1.40"	5.10"	7"	1"	2.45"	10,000	2994T77	131.53	2994T32	29.08
1 1/4"-7	470	2"	6.75"	9.22"	1.25"	2.63"	15,000	2994T81	207.90	2994T33	54.28
1 3/8"-6	670	2"	6.75"	9.22"	1.25"	2.63"	20,000	2994T82	222.48	2994T34	88.88
1 1/2"-6	800	2"	6.75"	9.22"	1.25"	2.63"	24,000	2994T83	239.49	2994T35	97.64

• When ordering, please specify 3052T999 and bolt size.

Metric Drawn Steel Hoist Rings

Bolt Size	Thread Torque, kg/m	Dimensions, mm A	C	D	E	L	Work Load Limit, kg	Hoist Ring	Each	Repl. Bolt	Each
M8 × 1.25mm	1.0	10.9	46.7	67.8	9.7	12.5	400	29495T41	$49.04	29495T61	$12.27
M10 × 1.50mm	1.7	10.9	46.7	67.8	9.7	17.5	450	29495T42	49.04	29495T62	12.27
M12 × 1.75mm	3.8	22.4	89.4	121.4	19.0	19.0	1,050	29495T43	59.70	29495T63	14.86
M16 × 2.00mm	8.2	22.4	89.4	121.4	19.0	29.0	1,900	29495T44	61.46	29495T64	17.05
M20 × 2.50mm	13.6	22.4	89.4	121.4	19.0	34.0	2,150	29495T45	63.32	29495T65	21.89
M24 × 3.00mm	31.0	35.6	130.6	165.6	25.4	37.0	4,200	29495T47	156.72	29495T67	33.82
M30 × 3.50mm	60.0	44.5	165.1	221.7	31.7	41.9	7,000	29495T48	275.54	29495T68	39.56

NEVER EXCEED WORK LOAD LIMITS

These rings swivel 360° you to flip and turn parts ing. Extra-large diameter r most any size hook. Rings a black-oxide finish and ha

Bolt Size	Thread Torque, Ft.-Lbs.	A
5/16"-18	3.5	1.0"
3/8"-16	4.5	1.0"
1/2"-13	15.0	1.5"
5/8"-11	25.0	1.5"
3/4"-10	50.0	2.0"
1"-8	90.0	2.0"
1 1/4"-7	150.0	3.0"

Each ring offers three variety of uses. Ideal for milling cutters, dies, and

Bolt Size	A
S1 1/4"-20 S2 5/16"-18 S3 3/8"-16	.625"
S1 1/2"-13 S2 5/8"-11 S3 3/4"-10	.875"

Forged alloy-steel rin black-oxide finish. Rin

Thread Size	Screw Length	A
5/16"-18	1 1/4"	0.50
3/8"-16	1 1/4"	0.62
1/2"-13	2"	0.75

Perfect for die work shackle pivots 180° on a

Bolt Size	A
American Standard	
1/2"-13	0.719"
5/8"-11	0.875"
3/4"-10	1"
7/8"-9	1.156"
1"-8	1.281"
1 1/4"-7	1.625"
1 1/2"-6	1.875"
2"-4 1/2"	2.875"
Metric Standard—Dime	
M12 × 1.75	15.069
M16 × 2	19.035
M20 × 2.5	22.207
M24 × 3	29.345
M30 × 3.5	36.483
M36 × 4	42.828

Ideal for temporary to steel, wood, and materials using machi coil bolts. Shackle swi through bolt center. Ma steel welded to heavy- plate. Recommended r length is 4" for 3070T2 and T27; and 7" for T2

Unified National Coa

Thread Dia.	Dimen L	T
1/4"-20	2"	1
5/16"-18	2 1/4"	1
3/8"-16	2 1/2"	1
3/8"-16	4 1/4"	2
1/2"-13	3 1/4"	1
1/2"-13	6"	3
3/4"-10	4 1/2"	2

○ FIND THE REQUIRED LIFTING LOAD F

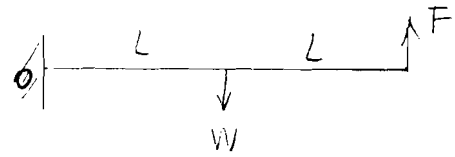

$\Sigma M_O = 0$

$$W \times L - F \times 2L = 0$$

$$F = \frac{W}{2} \quad \text{where } W = 13260\,lb$$

$$F = \frac{13260}{2} = 6630\,lb.$$

therefore, the safety factor is

$$SF = \frac{24000}{6630} = 3.6$$

FROM PREVIOUS STUDY, KNOWING THE WEIGHT OF STRONGBACK INCLUDES THE FOLLOWINGS:

1) FRAME WEIGHT = 2830 lb
2) CONNECTIONS (Plates, Bolts & NUTS) = 1652 lb
3) ROLLER PIVOT ASSEMBLY = 471 lb
4) SUPPORTING EARS = 180 lb
5) LIFTING LUG = 31 lb
6) SUPPORTING LIPS = 46 lb
7) CLAMPING DEVICES = 142 lb

Therefore,

$$\text{Total weight} = 2830 + 1652 + 471 + 180 + 31 + 46 + 142$$

$$= 5352 \text{ lb}$$

FIND THE BALANCE POINT AT VERTICAL POSITION WITH FULL SCINT.

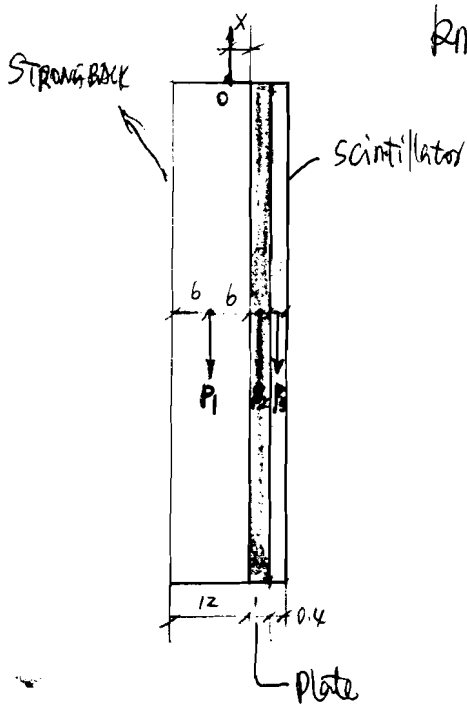

Known:

P_1 = Strongback weight
= 5352 lb

P_2 = Detector plate weight
= 7600 lb

P_3 = Scintillator weight (Full)
= 308 lb

$\Sigma M_O = 0$

$$P_1(6-x) = P_2\left(x+\frac{1}{2}\right) + P_3\left(x+1+\frac{0.4}{2}\right)$$

$$5352(6-x) = 7600(x+0.5) + 308(x+1+0.2)$$

$$X = 2.107\,m$$

- FIND THE BALANCE POINT AT VERTICAL POSITION WITH NO SCINTILLATOR.

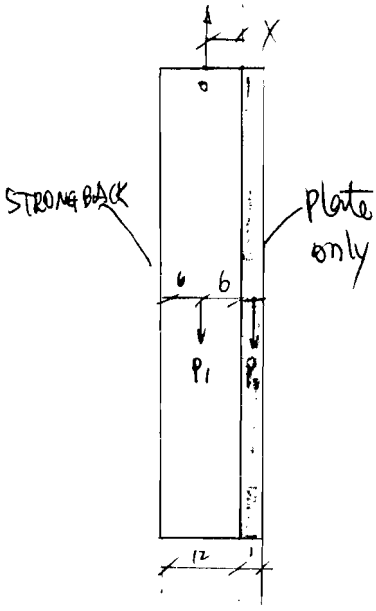

Knowing:

P_1 = STRONGBACK WEIGHT
= 5352 lb

P_2 = DETECTOR PLATE WEIGHT
= 7600 lb

$$\Sigma M_0 = 0$$

$$P_1(6-x) = P_2\left(x+\frac{1}{2}\right)$$

$$5352(6-x) = 7600(x+0.5)$$

$$x = 2.186 \text{ in}$$

- FIND THE ROTATING ANGLE DURING LIFTING

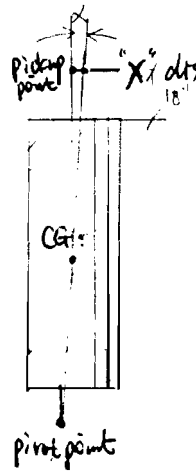

From ideas result, knowing:

when full scintillator attached

$\alpha = 2.8°$

$X = 4.47$ in

when empty plate attached

$\alpha = 2.7°$

$X = 4.38$ in

- FIND THE ROTATING ANGLE BETWEEN THE PLATES

The plate to plate is connected by the axial restraint bolt. Therefore, the distance at the ear slot between the plates is equal to 1.338 in.

From ideas result, knowing. when $\alpha = 10°$, those two plate start to interfer with each other.

- FIND THE MINIMUM EDGE DISTANCE FROM THE CENTER OF THE BOLT

The bolt size for hoist ring is 1½" dia.

According to AISC, ASD, Table J3.5, page 5-76, knowing the edge distance is 1¼ × dia.

therefore, $1\frac{1}{4} \times 1\frac{1}{2} = 1.875$ in

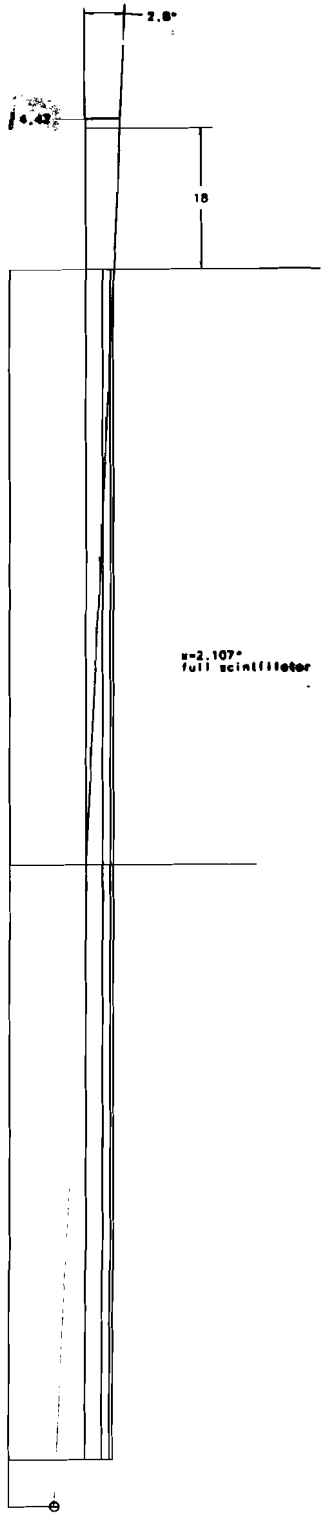
2.8°
4.43
18
u=2.107°
full scintillator
pivot point

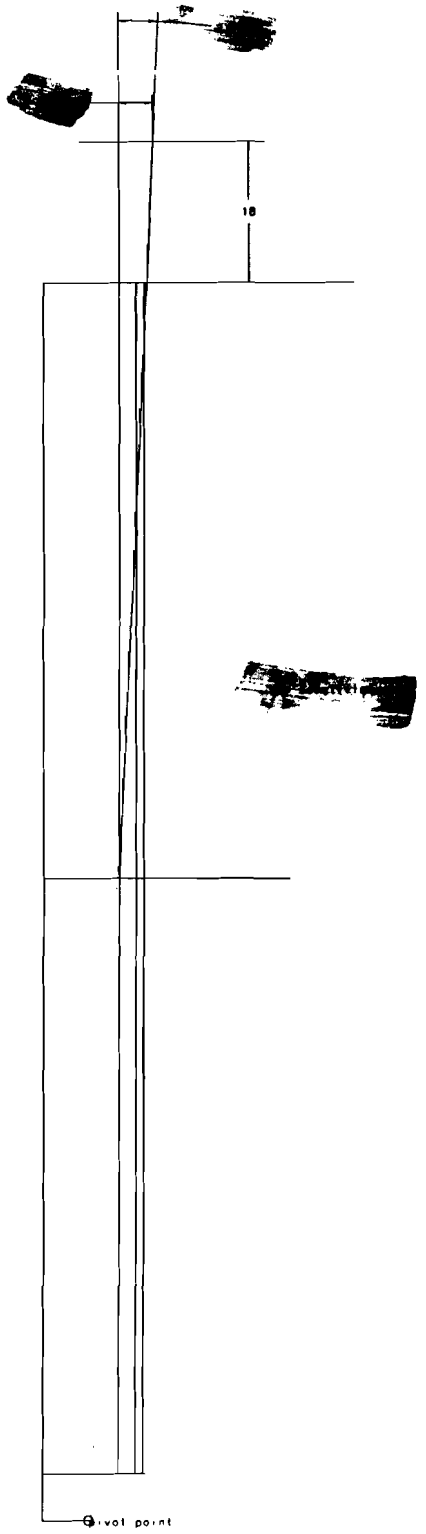
18
pivot point

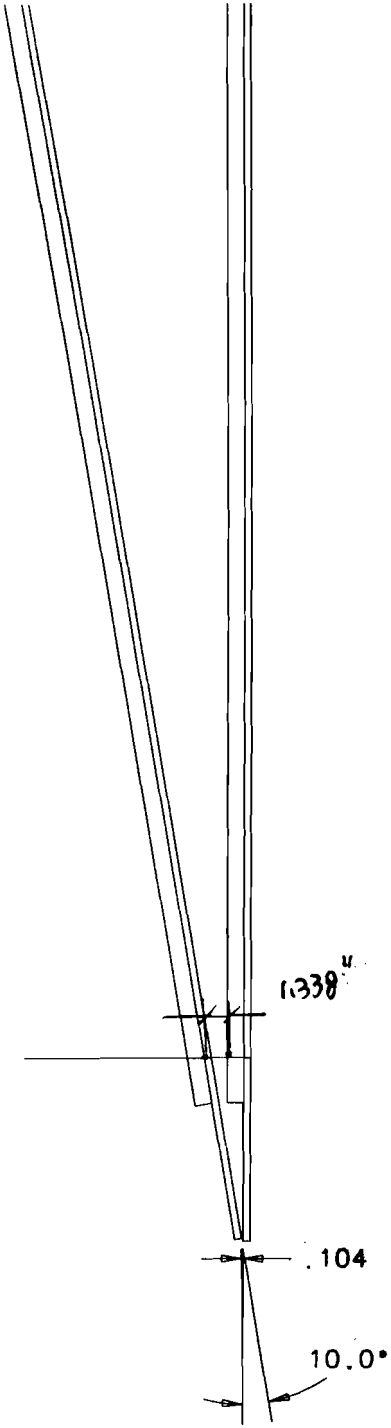
1.338"
.104
10.0°

- FIND THE PICK UP POINT LOCATION VARIATION BETWEEN THE FULL SCINTILLATOR ATTACHED AND NO SCINTILLATOR ATTACHED.

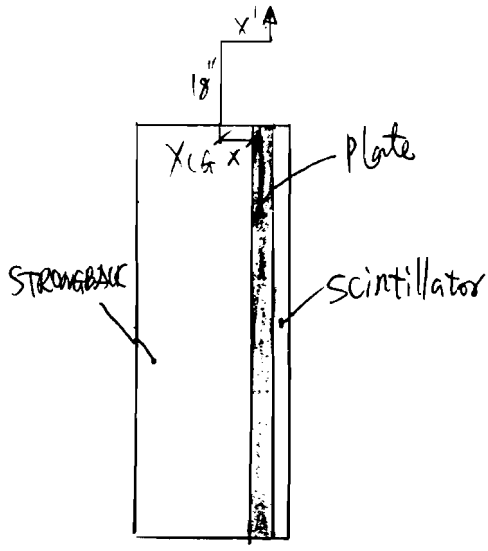

From ideas results, when full scintillator attached, knowing:

$X' = 4.47$ in

$X = 2.107$ in $\qquad \alpha = 2.8°$

$$\Delta X_f = X' - X = 4.47 - 2.107 = 2.363 \text{ in}$$

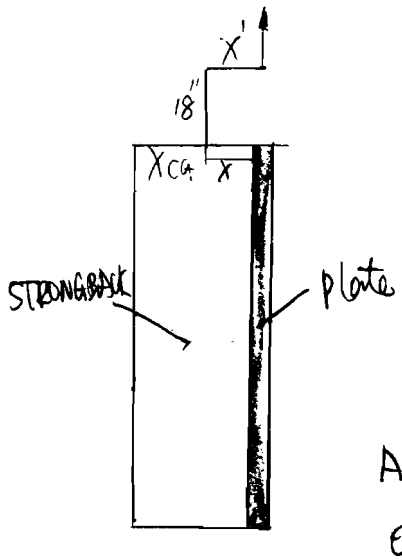

From ideas results, when no scintillator attached, knowing:

$X' = 4.38$ in

$X = 2.186$ in $\qquad \alpha = 2.7°$

$$\Delta X_e = X' - X = 4.38 - 2.186 = 2.194 \text{ in}$$

ASSUME, PICK UP POINT DESIGN IS BASED ON THE FULL SCINTILLATOR ATTACHED, Therefore, the adjustment will be

$$\Delta X_f - \Delta X_e = 2.363 - 2.194 = 0.169 \text{ in}$$

USE 0.25 in adjustment in the slots of the connecting plate.

DESIGN THE HOIST RING ATTACHMENT BRACKET 1 :

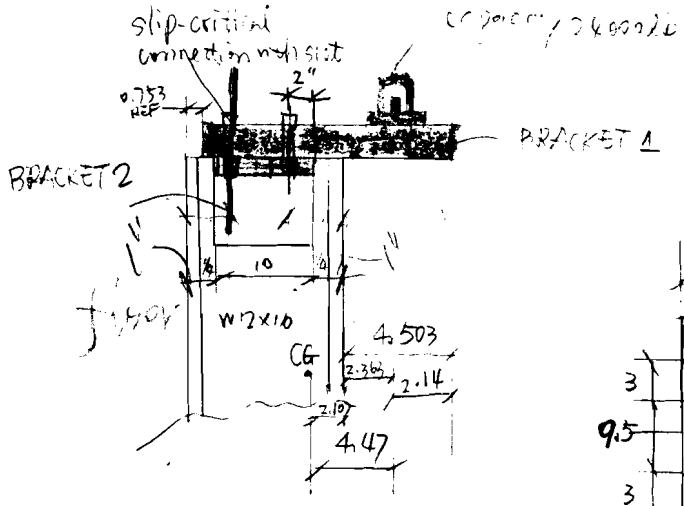

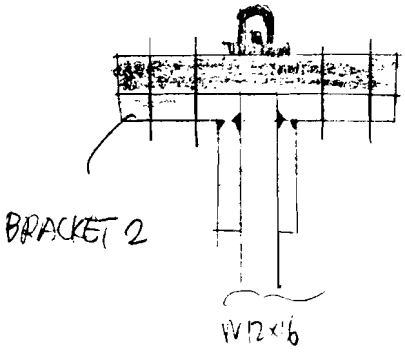

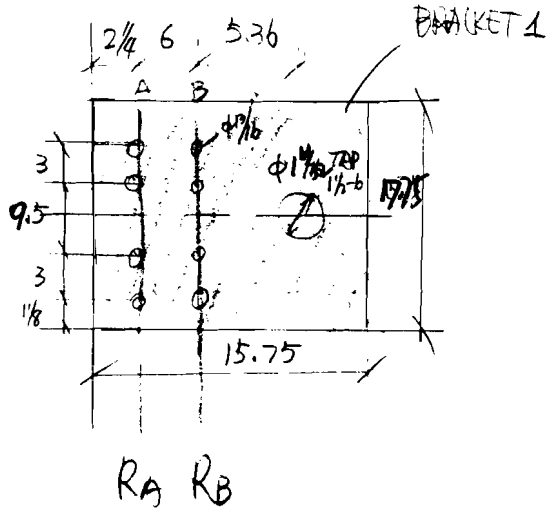

BRACKET 1 : A36

3" x 15.75" x 17.75" x (1)

* See page 24 for final design included the weigh of the lifting device.

— When the strongback has been lifted at horizontal position, Find the R_A & R_B

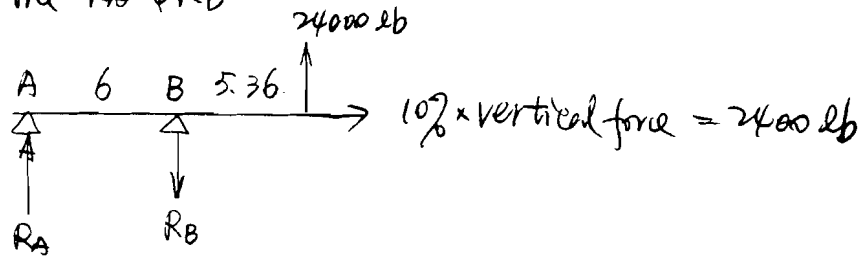

$\Sigma M_A = 0$

$$6 \times R_B = (6 + 5.36) \times 24000$$

$$R_B = 45440 \text{ lb}$$

$\Sigma M_B = 0$

$$R_A \times 6 = 5.36 \times 24000$$

$$R_A = 21440 \text{ lb}$$

— FIND THE MAXIMUM MOMENT

Shear.

Moment:

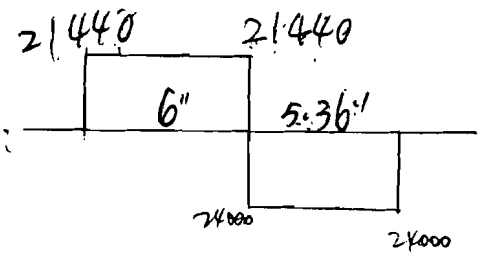

$$M_{max} = 21440 \times 6 = 128640 \text{ lb-in}$$

– FIND THE REQUIRED SECTION MODULUS.

From previous study, knowing $F_b = 12000$ psi.

$$S_x = \frac{M}{F_b} \quad \text{where } M = 128640 \text{ lb-in}$$

$$S_x = \frac{128640}{12000} = 10.72 \text{ in}^3.$$

$$S_x = \frac{bd^2}{6} \rightarrow d = \sqrt{\frac{6S_x}{b}} \quad \text{where } S_x = 10.72 \text{ in}^3, \; b = 15.75 \text{ in}$$

$$d = \sqrt{\frac{6 \times 10.72}{15.75}} = 2.02 \text{ in}$$

Since "L" dimension of the Hoist Ring is 2.7 in.
Use 3".

$$SF = \frac{3}{2.02} = 1.5$$

– FIND THE TENSILE STRESS ON THE BOLT f_t (ksi)

The Right side bolts have tension:

$$\frac{R_A}{4} = \frac{21440}{4} = 5360 \text{ lb}$$

The left side bolts have tension:

$$\frac{R_B}{4} = \frac{45440}{4} = 11360 \text{ lb} \quad \text{– governs}$$

$$f_t = \frac{P}{A} \quad \text{where } P = 11360 \text{ lb}, \; A = 0.448 \text{ in}^2 \text{ – } 3/4\text{" Bolt}$$

$$f_t = \frac{11360}{0.448} = 25.71 \text{ ksi}$$

From the previous study, knowing $F_t = 30.6$ ksi

$$SF = \frac{30.6}{25.71} = 1.19$$

- FIND THE SHEAR STRESS ON THE BOLT f_v (ksi)

$f_v = \frac{V}{A}$ where $V = \frac{1}{8} \times 24000 = 3000\,lb$

$A = 0.4418\ in^2$

$f_v = \frac{3000}{0.4418} = 6.790$ ksi

- FIND THE ALLOWABLE STRESS ON THE BOLT F_v (ksi)

According to AISC, ASD, Table J3.2, page 5-73, knowing the allowable shear for slip-critical connections is

A325, $F_v = 17$ ksi

According to AISC, ASD, J3.6, page 5-74, knowing.

For A325 used in slip-critical connections, the maximum shear stress allowed by Table J3.2 shall be multiplied by the reduction factor $\left(1 - \frac{f_t A_b}{T_b}\right)$, where f_t is the average tensile stress due to a direct load applied to all of the bolts in a connection and T_b is the pretension load of the bolt specified in Table J3.7.

for 3/4" dia Bolt → $T_b = 28$ kips.

therefore $1 - \frac{f_t A_b}{T_b} = 1 - \frac{P}{T_b} = 1 - \frac{11.36}{28} = 0.594$

The allowable stress is $0.594 \times 17 = 10.10$ ksi

- FIND THE SAFETY FACTOR ON SHEAR STRESS.

$F_v = 10.10$ ksi

$f_v = 6.790$ ksi

$$SF = \frac{10.10}{6.790} = 1.49$$

- FIND THE ALLOWABLE SHEAR STRESS ON THE NET AREA OF THE PLATE R_v (ksi)

From the previous study, knowing:

$R_v = 12$ ksi

- FIND THE COMPUTED SHEAR STRESS ON THE NET AREA OF THE PLATE. γ_v (ksi).

$V = 24000$ lb

$$\text{net area1} = t\,[L - n(d + 0.0625)]$$

$$= 3 \times [15.75 - 4(0.75 + 0.0625)] = 37.5 \text{ in}^2$$

↳ governs

$$\text{net area2} = t\,[L - n(d + 0.0125)]$$

$$= 3 \times [15.75 - 1(1.5 + 0.0625)] = 42.56 \text{ in}^2$$

$$\gamma_v = \frac{V}{\text{net area}} = \frac{24000}{37.5} = 0.640 \text{ ksi}$$

- FIND THE SAFETY FACTOR ON SHEAR STRESS ON THE NET AREA OF THE PLATE.

$R_v = 12$ ksi $\quad \gamma_v = 0.640$ ksi

$$SF = \frac{12}{0.640} = 18.75$$

- PRELOAD THE BOLT (TORQUE)

Tension = 21440 lb Per Bolt = $\frac{21440}{4}$ = 5360 lb

According to "Design of machine Elements" chapter 5 page 276, knowing:

Torque required to produce desired clamping force is

$T = 0.195\, dw$

where $d = 0.75''$ for 3/4" dia Bolt

$W = 5360$ lb

$T = 0.195 \times 0.75 \times 5360$

$= 783.9$ lb-in

$= 65.325$ lb-ft

$= 65.325$ lb-ft

USE 150 lb-ft

- TIGHTEN HOIST RING BOLT 1½-6 TO A TORQUE OF 800 LB-ft ACCORDING TO MANUFACTURER RECOMMENDATION

- FIND THE DEFLECTION on BRACKET 1.

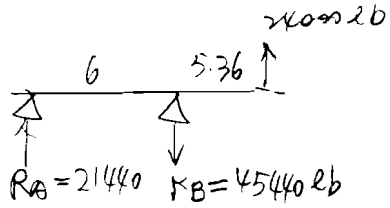

According to AISC, ASD, BEAM DIAGRAMS and FORMULAS, page 2-305, knowing: The maximum deflection at overhang is,

$$\Delta max = \frac{Pa^2}{3EI}(l+a)$$

where $P = 24000$ lb

$a = 5.36$ in

$l = 6$ in

$E = 29 \times 10^6$

$$I = \frac{bd^3}{12} = \frac{15.75 \times 3^3}{12} = 35.44 \text{ in}^4$$

$$\Delta max = \frac{24000 \times 5.36^2}{3 \times 29 \times 10^6 \times 35.44}(6 + 5.36)$$

$$= 0.0025 \text{ in}$$

Since the deflection is so small, no gusset plates will be needed.

- FIND THE ASSEMBLING BOLT LENGTH

- Bolt: 3/4-10 UNC-2A TYPE 1 (medium carbon steel)
  HEX HEIGHT 1/2"
- Nut: A194 for grade 2 for bolt 3/4" dia, hardered
  HEAVY HEX NUT HEIGHT 3/4"
- washer: F436 hardened for Bolt 3/4" dia, flat,
  washer Height : 5/32"

Bolt length = total thickness of all connected material
+ Grip + washer

$= (3+2) + (1) + (5/32)$

$= 6.15625$ in

$\rightarrow 6\frac{1}{2}$ "

3/4-10-UNC 2A-$6\frac{1}{2}$" LONG × 8 (each)

DESIGN THE HOIST RING ATTACHMENT BRACKET 2

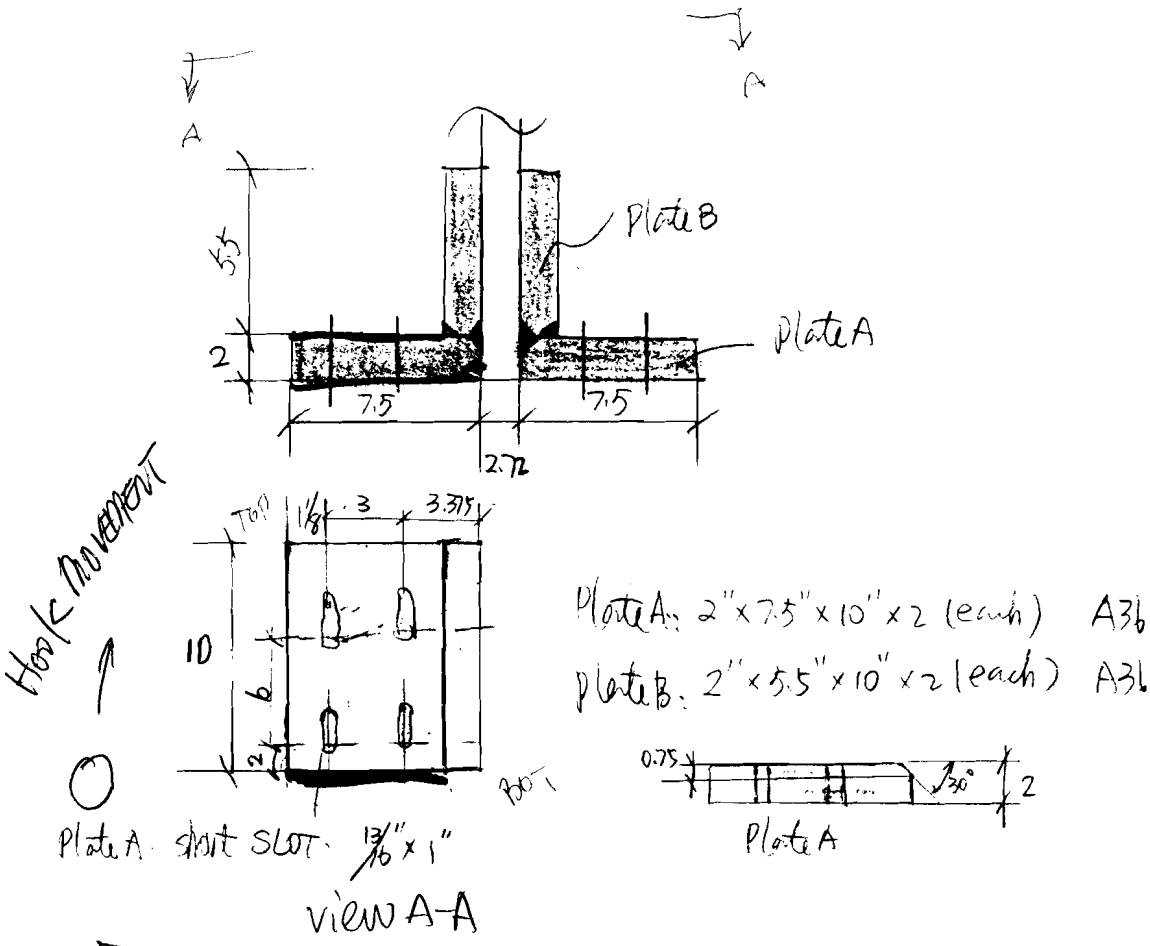

— FIND THE TENSILE STRESS AT VERTICAL POSITION f_t (ksi)

$$f_t = \frac{P}{A} \quad \text{where } P = 24000 \times 1/8 = 3000 \text{ lb}$$

$$A = 0.4418 \text{ in}^2$$

$$f_t = \frac{3000}{0.4418} = 6.79 \text{ ksi}$$

From the previous study, knowing: $F_t = 30.6$ ksi

$$SF = \frac{30.6}{6.79} = 4.5$$

[redacted]

— FIND THE REQUIRED SECTION MODULUS DUE TO THE BENDING MOMENT.

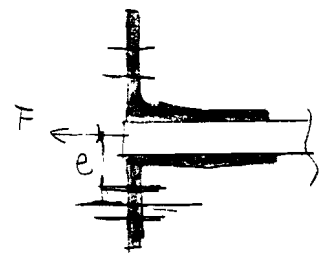

Where $F = 24000\ lb \times \frac{1}{2} = 12000\ lb$

$e = 4.875 + \frac{1}{2}(2.72) = 6.235\ in$

$M = Fe = 12000 \times 6.235\ in$
$= 74820\ lb\text{-}in$

From the previous study, knowing

$F_b = 12000\ psi$

$$S_x = \frac{M}{F_b} = \frac{74820}{12000} = 6.235\ in^3$$

$$S_x = \frac{bd^2}{6} \rightarrow d = \sqrt{\frac{6S_x}{b}}$$ where $S_x = 6.235\ in^3$, $b = 10\ in$

$$d = \sqrt{\frac{6 \times 6.235}{10}} = 1.93\ in.$$

use 2".

$$SF = \frac{2}{1.93} = 1.$$

- FIND THE SHEAR STRESS ON THE BOLT AT HORIZONTAL POSITION

$f_v = \frac{V}{A}$ where $V = \frac{1}{8} \times 24000 = 3000$ lb

$A = 0.4418$ for A325-3/4" dia

$f_v = \frac{3000}{0.4418} = 6.79$ ksi

From the previous study, knowing $F_v = 10.625$ ksi

$SF = \frac{10.625}{6.79} = 1.56$

- FIND THE SHEAR STRESS ON THE NET AREA OF THE PLATE.

$\gamma_v = \frac{V}{A_{net}}$ where $V = \frac{1}{2} \times 24000 = 12000$ lb

$A_{net} = t\,[L - n(d + 0.0625) - (2 \times 0.5)]$

$= 2\,[10 - 2(0.75 + 0.0625) - 1.5]$

$= 15.75$ in^2

$\gamma_v = \frac{12000}{15.75} = 0.762$ ksi

From the previous study, knowing $R_v = 12$ ksi

$SF = \frac{12}{0.762} = 15.7$

CHECK THE BENDING STRESS ON THE W12X16 BEAM

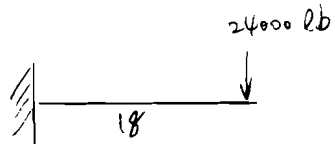

W12x16

← 10% vertical load = 10% × 24000 = 2400 lb

From the previous study, knowing, W12x16 has web reinforcements the buildup section has

$$S_x = 69.06 \text{ in}^4 \quad S_y = 10.97 \text{ in}^4$$

1) For strong axis bending:

$$M_x = p \times l \quad \text{where } p = 24000 \text{ lb}, \; l = 18 \text{ in}$$

$$M_x = 24000 \times 18 = 432000 \text{ lb-in}$$

$$f_{bx} = \frac{M_x}{S_x} = \frac{432000}{69.06} = 6.255 \text{ ksi}$$

2) For weak axis bending:

$$M_y = p \times l \quad \text{where } p = 2400 \text{ lb}, \; l = 18 \text{ in}$$

$$M_y = 2400 \times 18 = 43200 \text{ lb-in}$$

$$f_{by} = \frac{M_y}{S_y} = \frac{43200}{10.97} = 3.938 \text{ ksi}$$

3) For combined bending stress

$$\frac{f_{bx}}{F_{bx}} + \frac{f_{by}}{F_{by}} \leq 1.0 .$$

where $f_{bx} = 6.255$ ksi

$F_{bx} = 12$ ksi

$f_{by} = 3.938$ ksi

$F_{by} = 12$ ksi

$$\frac{f_{bx}}{F_{bx}} + \frac{f_{by}}{F_{by}} = \frac{6.255}{12} + \frac{3.938}{12} = 0.85 < 1.0$$

$$SF = \frac{1.0}{0.85} = 1.2$$

[redacted] THE DEFLECTION ON THE W12x16 BEAM

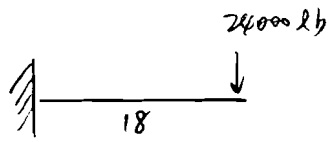

According to AISC, ASD, BEAM DIAGRAMS & FORMULAS, page 2-303, known, the maximum deflection at free end is:

$$\Delta_{max} = \frac{Pl^3}{3EI}$$

where $P = 24000$ lb

$l = 18$ in

$I = 44$ in^4

$$\Delta_{max} = \frac{24000 \times 18^3}{3 \times 29 \times 10^6 \times 44} = 0.004 \text{ in}$$

The allowable deflection is

$$\frac{l}{480} = \frac{18}{480} = 0.0375 \text{ in}$$

$$SF = \frac{0.0375}{0.004} = 9.4$$

therefore, the buildup beam is strong enough to carry the load.

— DESIGN THE WELDS ON ATTACHMENT BRACKET 2

* Groove depth:

$3/4 + 1/8 = 7/8$

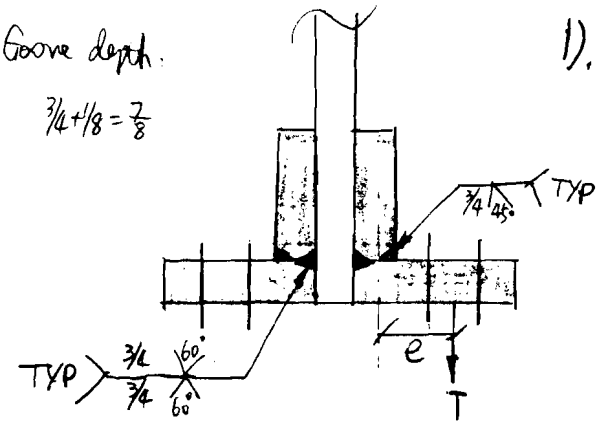

1). AT VERTICAL POSITION, knowing

$T = \frac{1}{2} \times 24000 = 12000$ lb

$e = 3.375 + (\frac{3}{2}) - 1 = 3.875$ in

$M = T \times e = 12000 \times 3.875$

$= 46500$ lb-in

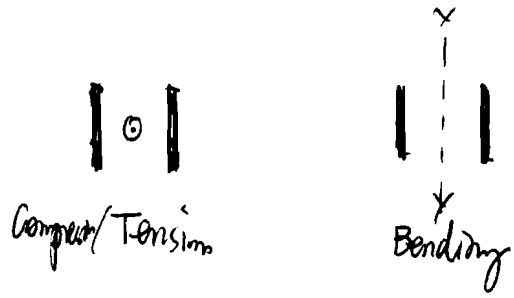

Welds: E70XX

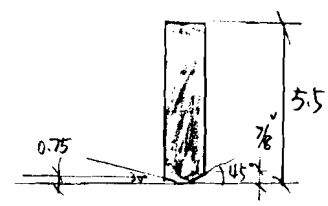

According to "Design of welded structures" Blodgett, section 7.4-7, page 7.4-7, Table 5 "properties of weld treated as Line", knowing:

<u>Bending</u>: $S_y = b \cdot d$. where $b = 2$ in

$d = 5.5$ in

$S_y = 2 \times 5.5 = 11$ in^2

O DETERMINE THE FORCE ON WELD:

For tension/compression: $f_T = \frac{P}{A_W}$ where $P = 12000$ lb

$A_W = 2 \times 5.5$

$= 11$ in

$f_T = \frac{12000}{11} = 1090.9$ lb/in

For Bending:

$$f_B = \frac{M}{S_y} \quad \text{where } M = 46500 \text{ lb-in}$$
$$S_y = 11 \text{ in}^2$$

$$f_B = \frac{46500}{11} = 4227.27 \text{ lb/in}$$

o DETERMINE THE WELD SIZE BY USING ALLOWABLES:

The combined force is equal to:

$$f_V = f_T + f_B$$
$$= 1090.9 + 4227.27 = 5318 \text{ lb/in}$$
$$= 5.3 \text{ kips/in}$$

According to AISC, ASD, Table J2.1, Page 5-66, knowing, the effective throat thickness for single bevel-groove weld and single V grooved weld are 3/4"

According to AISC, ASD, Table J2.5, page 5-70, knowing, the allowable stress on weld is the same as base metal.

According to ANSI/ASME, B30.20-1993, Below the Hook Lifting Device, knowing:

the allowable stress is equal to 1/3 Fy.

where Fy = 36 ksi for A36

$$\frac{1}{3}F_y = \frac{1}{3} \times 36 = 12 \text{ ksi}$$

Therefore, the allowable loads in kips/in is equal to

$$12 \times 0.707 \times 3/4'' = 6.363 \text{ kip/in}$$

$$SF = \frac{6.363}{5.3} = 1.2$$

2). AT HORIZONTAL POSITION:

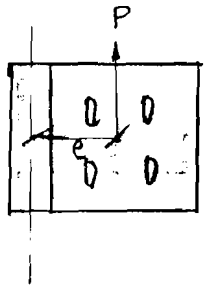

$P = 1/2 \times 24000 = 12000$ lb

$e = 3.875$ in

$M = P \times e = 12000 \times 3.875 = 46500$ lb-in.

shear Twisting

According to "Design of welded structures" Blodgett, section 7.4-7, page 7.4-7, Table 5 "Properties of weld treated as line", knowing:

<u>Twisting:</u> $J = \dfrac{b^3 + 3bd^2}{6}$ where $b = 5.5$ in, $d = 2$ in

$$J = \frac{5.5^3 + 3 \times 2 \times 5.5^2}{6} = 57.98 \text{ in}^3$$

O DETERMINE THE FORCE ON WELD:

For shear:

$$f_v = \frac{V}{A_W} \quad \text{where } V = 12000 \text{ lb}$$

$$A_W = 2 \times 5.5 = 11 \text{ in}$$

$$f_v = \frac{12000}{11} = 1090.9 \text{ lb/in}$$

For Twisting:

$$f_\tau = \frac{Tc}{J} \quad \text{where } T = 46500 \text{ lb-in}$$

$$c = \frac{5.5}{2} = 2.75 \text{ in}$$

$$J = 57.98 \text{ in}^3$$

$$f_\tau = \frac{46500 \times 2.75}{57.98} = 2205.5 \text{ lb/in}$$

O DETERMINE THE WELD SIZE BY USING ALLOWABLES.

Combined force on the weld:

$$f_v = f_v + f_\tau = 1090.9 + 2205.5 = 3296 \text{ lb/in}$$
$$= 3.296 \text{ kips/in}$$

From the previous study showing for 3/4" weld, the allowable loads in kips/in is equal to

6.363 kips/in

$$SF = \frac{6.363}{3.296} = 1.9$$

OK

[redacted] THE WELDS BETWEEN THE WEB & ATTACHMENT BRACKET 2

1). AT VERTICAL POSITION:

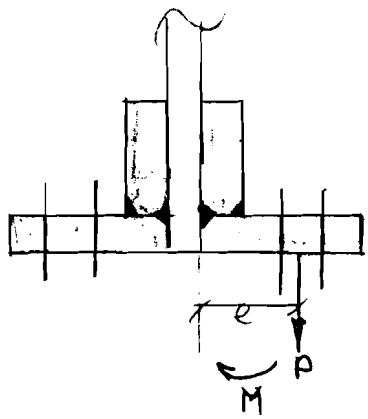

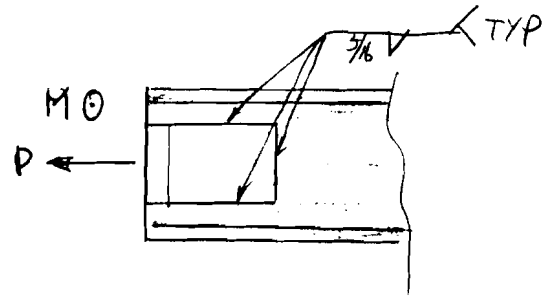

WELDS: E70XX

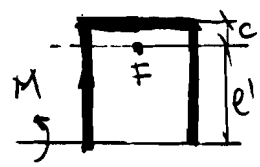

compression / tension

$M = P \times e$ where $P = 24000 \times \frac{1}{2} = 12000$ lb

$e = 3.375 + (\frac{1}{2} \times 3) = 4.875$ in

$M = 12000 \times 4.875 = 58500$ lb-in

$M = F \times e'$ where $M = 58500$ lb-in

$e' = 7.5 - c$

where $c = \frac{d^2}{b + 2d}$

where $d = 7.5$ $b = 10$

$c = \frac{7.5^2}{10 + 2 \times 7.5} = 2.25$ in

$$e' = 7.5 - c$$
$$= 7.5 - 2.25 = 5.25 \text{ in}$$

Therefore, $F = \frac{M}{e'} = \frac{58500}{5.25} = 11143 \text{ lb}$

O DETERMINE THE FORCE ON WELD:

For shear:

$f_v = \frac{V}{A_W}$ where $V = 12000 \text{ lb}$

$A_W = 7.5 \times 2 = 15 \text{ in}$

$f_v = \frac{12000}{15} = 800 \text{ lb/in}$

For Tension / compression:

$f_t = \frac{P}{A_W}$ where $P = F = 11143 \text{ lb}$

$A_W = 7.5 \times 2 + 10 = 25 \text{ in}$

$f_t = \frac{11143}{25} = 446 \text{ lb/in}$

O DETERMINE THE WELD SIZE BY USING ALLOWABLES:

The resultant force on weld:

$f = \sqrt{f_v^2 + f_t^2} = \sqrt{800^2 + 446^2} = 916 \text{ lb/in}$

$= 0.916 \text{ kips/in}$

According to AISC, ASD, TABLE J2.3, page 5-66, knowing, the effective throat thickness for fillet weld is 5/16.

According to AISC, ASD, Table J2.5, page 5-70, knowing, the allowable stress on weld is the same as base metal.

According to ANSI/ASME, B30.20-1993, Below the Hook Lifting Device, knowing:

the allowable stress is equal to $\frac{1}{3}F_y$, where $F_y = 36$ ksi for A36. then. $\frac{1}{3}F_y = \frac{1}{3} \times 36 = 12$ ksi

Therefore, the allowable loads in kips/in is equal to

$$12 \times 0.707 \times 5/16 = 2.65 \text{ kips/in}.$$

$$SF = \frac{2.65}{0.916} = 2.9$$

2) AT HORIZONTAL POSITION

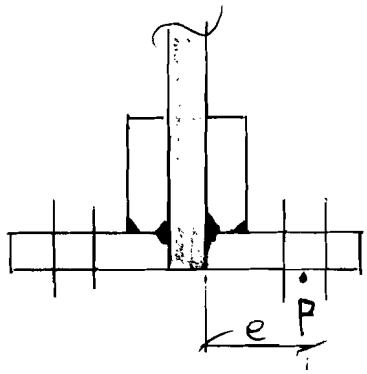

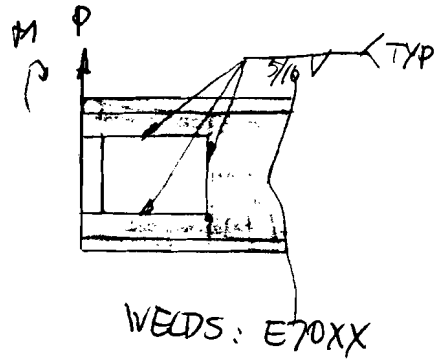

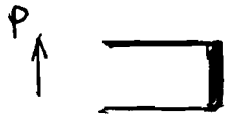

Shear

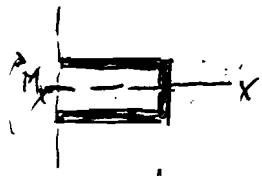

Bending

$M = P \times e$ where $P = 24000 \times \frac{1}{2} = 12000$ lb

$e = 4.875$ in

$M = 12000 \times 4.875 = 58500$ lb-in

According to "Design of welded structures" Blodgett, section 7.4-7, page 7.4-7, Table "properties of weld treated as line" knowing.

Bending: $S_x = bd + \frac{d^2}{6}$

where $b = 7.5$ in $d = 10$ in

$S_x = 7.5 \times 10 + \frac{10^2}{6} = 91.67$ in^2

O DETERMINE THE FORCE ON WELD:

For shear:

$$f_v = \frac{V}{A_w} \quad \text{where } V = P = 12000 \text{ lb}$$

$$A_w = 10 \text{ in}$$

$$f_v = \frac{12000}{10} = 1200 \text{ lb/in}$$

For Bending:

$$f = \frac{M}{S} \quad \text{where } M = 585000 \text{ lb-in}$$

$$S = 91.67 \text{ in}^2$$

$$f = \frac{585000}{91.67} = 638.16 \text{ lb/in}.$$

The resultant force is equal to:

$$f' = \sqrt{f_v^2 + f^2} = \sqrt{1200^2 + 638.16^2} = 1.36 \text{ kips/in}.$$

From previous study, knowing the allowable load in kips/in for 5/16" fillet weld is 2.65 kips/in.

$$SF = \frac{2.65}{1.36} = 1.95$$

In conclusion, the design is adequate.

PICKUP POINT EQUIPMENT WEIGHT

1) BRACKET 1 :

$3'' \times 15.75'' \times 17.75'' \times (1) \longrightarrow 211$ lb

2) BRACKET 2 :

Plate A : $2'' \times 7.5'' \times 10'' \times (2) \rightarrow 85$ lb

Plate B : $2'' \times 5.5'' \times 10'' \times (2) \rightarrow 62$ lb

3) Bolts 3/4" :

3/4-10-UNC 2A $\times 6\frac{1}{2}''$ long $\times 8$ (ea) $\rightarrow 10$ lb

4) hoist ring : 18 lb

Total weight $= 211 + 85 + 62 + 10 + 18$

$= 386$ lb

— CHECK THE BALANCE POINT LOCATION WITH THE LIFTING DEVICE WEIGHT @ THE FULL SCINTILLATOR

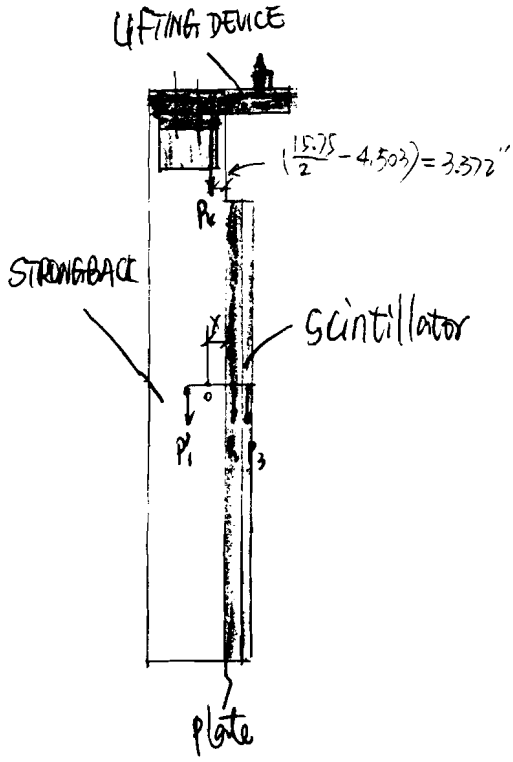

Known: $P_1 = 5352$ lb

$P_2 = 7600$ lb

$P_3 = 308$ lb

Then,

$P' = P_1 + \text{BRACKET2} + \text{BLOTS}$

$= 5352 + 85 + 62 + 10$

$= 5509$ lb

$P_4 = \text{BRACKET 1} + \text{HOIST RING}$

$= 211 + 18$

$= 229$ lb

$\Sigma M_0 = 0$

$$P_1'(6-x) + P_4(3.372-x) = P_2(x+0.5) + 308(x+1.2)$$

$$5509(6-x) + 229(3.372-x) = 7600(x+0.5) + 308(x+1.2)$$

$$x = 2.173''$$

- CHECK THE BALANCE POINT LOCATION WITH THE LIFTING DEVICE WEIGHT & NO SCINTILLATOR ATTACHED.

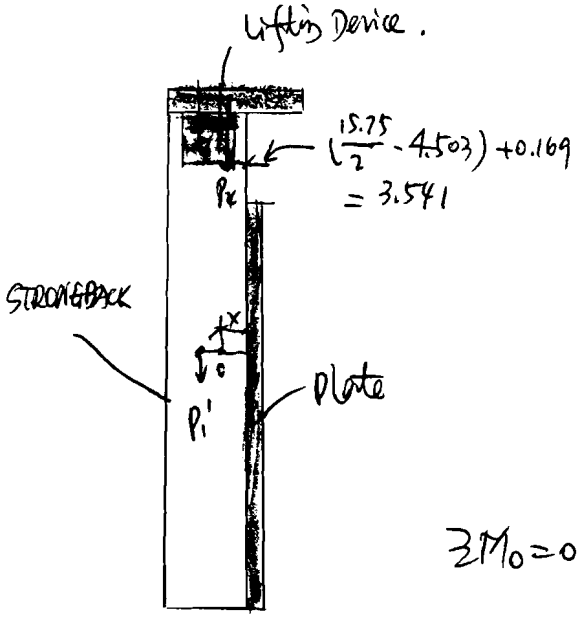

Knowing: $P_1' = 5509\ lb$

$P_2 = 7600\ lb$

$P_4 = 229\ lb$

$$\Sigma M_0 = 0$$

$$P_1'(6-x) + P_4(3.541-x) = P_2(x+0.5)$$

$$5509(6-x) + 229(3.541-x) = 7600(x+0.5)$$

$$5509 \times 6 - 5509x + 229 \times 3.541 - 229x = 7600x + 0.5 \times 7600$$

$$x = 2.254''$$

- FIND THE PICK UP POINT LOCATION VARIATION BETWEEN THE FULL SCINTILLATOR ATTACHED AND NO SCINTILLATOR ATTACHED.

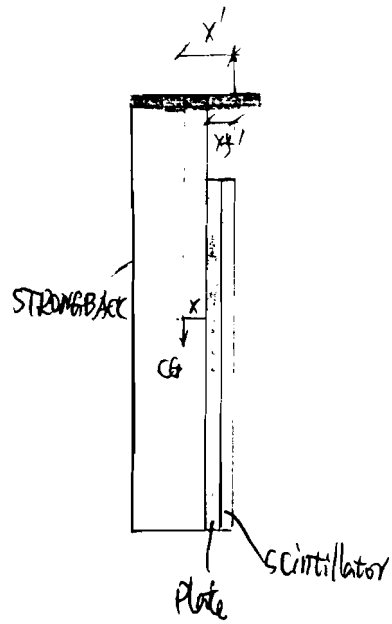

From Ideas results, when full scintillator attached, knowing:

$X' = 4.39$ in

$X = 2.173$ in $\quad \alpha = 2.7°$

$\Delta X_f' = 4.39 - 2.173 = 2.217$ in

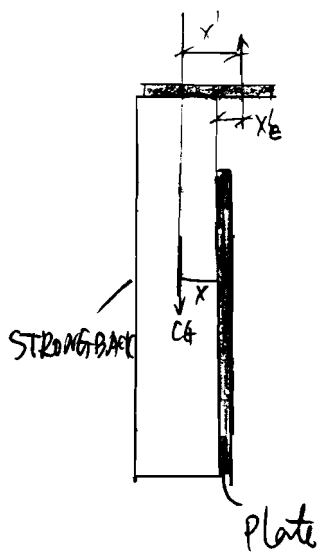

From Ideas results, when no scintillator attached, knowing:

$X' = 4.30$ in

$X = 2.254 \quad \alpha = 2.6°$

$\Delta X_e' = 4.30 - 2.254 = 2.046$ in

Therefore:

$\Delta X_f' - \Delta X_e' = 2.217 - 2.046 = 0.171$ in

That means the 0.25" adjustment in the slots of the connecting plate is adequent for this application.

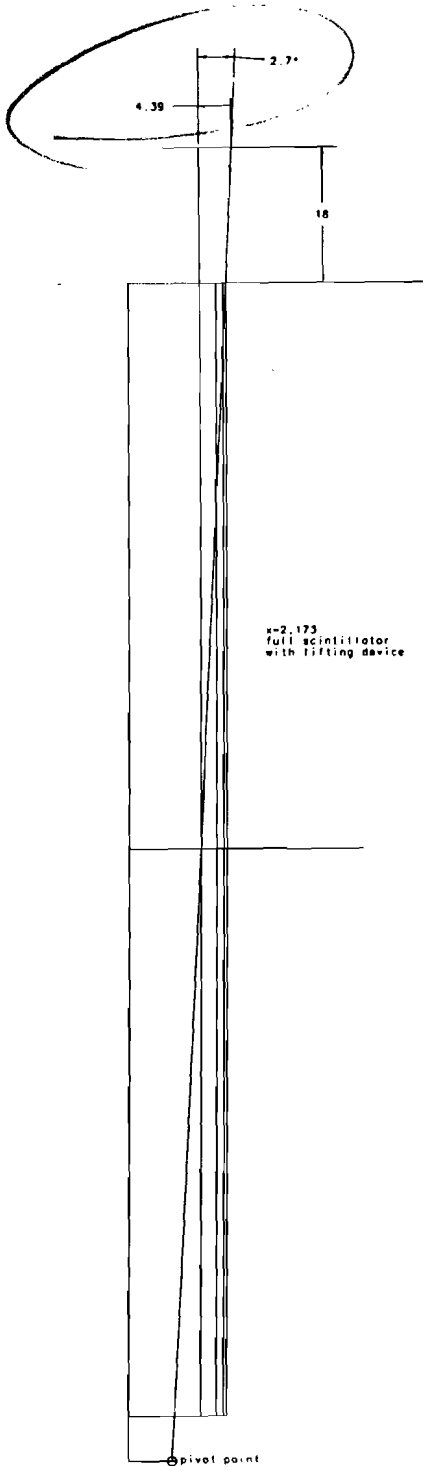
2.7°
4.39
18
x=2.173
full scintillator
with lifting device
pivot point

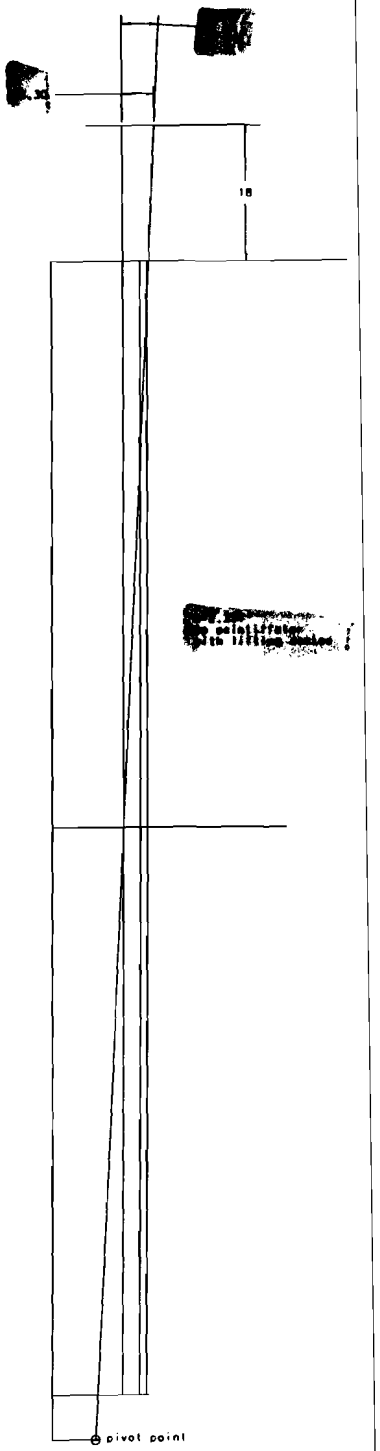
18
pivot point

— REDESIGN THE HOIST RING ATTACHMENT BRACKET 1 BASED ON FULL SCINTILLATOR ATTACHED.

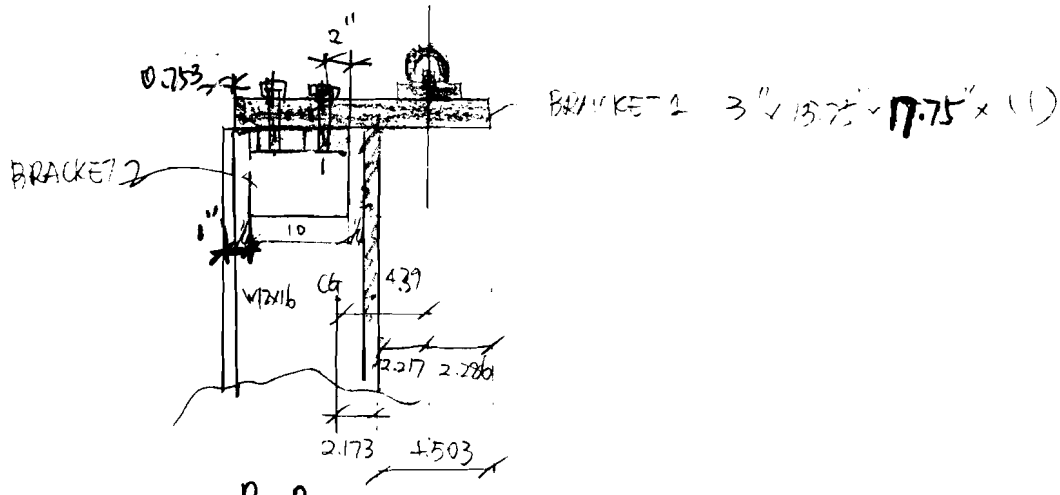

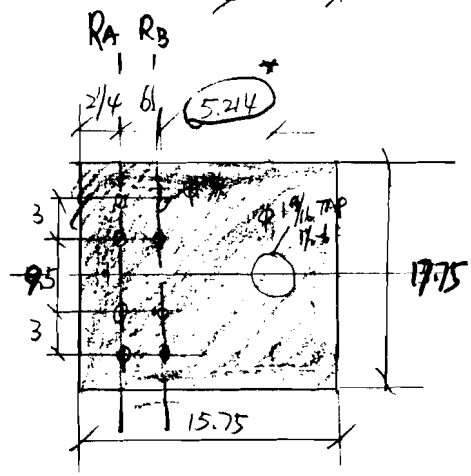

* This dimension had been changed from 5.36 → 5.214".

— when the strongback has been lifted at horizontal position, Find the R_A & R_B

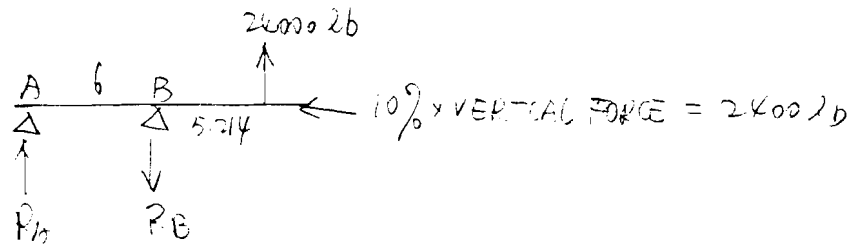

$\Sigma M_A = 0$ $\quad R_B \times 5.214 = (6 + 5.214) \times 24000$

$$R_B = 44856 \text{ lb}$$

$\Sigma M_B = 0$ $\quad R_A \times 6 = 5.214 \times 24000$

$$R_A = 20856 \text{ lb}$$

— FIND THE MAXIMUM MOMENT

Shear :

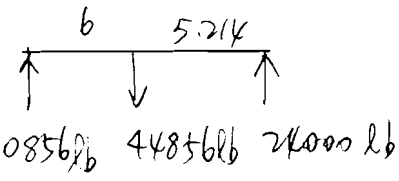

Moment :

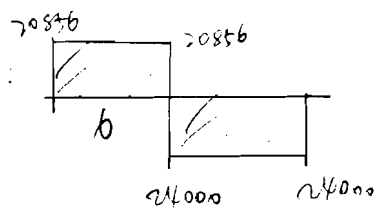

$M_{max} = 20856 \times 6 = 125136$ lb-in $< M_{max} = 128640$ lb-in.

Therefore, the plate is adequent to take the loads.

- FIND THE TENSILE STRESS ON THE BOLT f_t (ksi).

The Right side bolts have tension:

R_A 20856

The Left side bolts have tension:

$$\frac{R_B}{4} = \frac{44856}{4} = 11214 \text{ lb} \quad \text{— governs}$$

$$f_t = \frac{P}{A} \quad \text{where } P = 11214 \text{ lb}$$

$$A = 0.4418 \text{ in}^2 \quad \text{for } 3/4\text{" bolt}$$

$$f_t = \frac{11214}{0.4418} = 25.38 \text{ ksi} < f_t = 25.71 \text{ ksi}.$$

Therefore, the Bolt is strong enough to take the loads.

- FIND THE ALLOWABLE STRESS ON THE BOLT F_v (ksi).

$$F_v = 17\left(1 - \frac{f_t A_b}{T_b}\right) \quad \text{— for slip-critical connections}$$

Where $T_b = 28$ kips for 3/4" dia Bolt

$f_t A_b = 11.214$ kips

$$F_v = 17\left(1 - \frac{11.214}{28}\right) = 0.5995 \times 17 = 10.19 \text{ ksi} > f_v = 6.790 \text{ ksi}$$

Therefore, the Bolt is strong enough to take the shear force.

— FIND THE DEFLECTION ON REDESIGNED BRACKET 1.

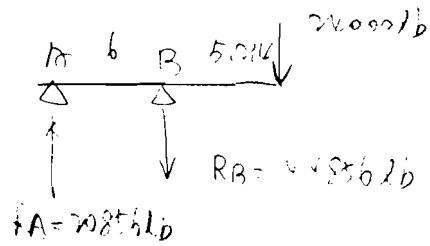

According to AISC, ASD, BEAM DIAGRAMS AND FORMULAS, page 2-305 knowing: The maximum deflection at overhang is

$$\Delta_{max} = \frac{Pa^2}{3EI}(l+a)$$

where $P = 24000$ lb

$a = 5.214$ lb

$l = 6$ in

$E = 29 \times 10^6$

$I = \frac{bd^3}{12} = \frac{15.75 \times 3^3}{12} = 35.44$ in^4

$$\Delta_{max} = \frac{24000 \times 5.214^2}{3 \times 29 \times 10^6 \times 35.44}(6 + 5.214)$$

$$= 0.0024 \text{ in}$$

Since the deflection is so small, the design is accurate for this application.

VERIFY THE LIFTING ANGLE BY USING COMBINED CG WITH SCINTILLATOR OR WITHOUT SCINTILLATOR ATTACHED.

—. FIND THE CG OF PICK UP POINT WELDMENT

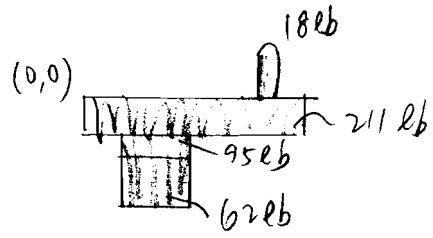

$$\Sigma M_y = \left(\frac{15.75}{2} \times 211\right) + \left[(95+62) \times 5.25\right] + (13.464 \times 18)$$

$$= 2728.227 \text{ lb-in}$$

$$y = \frac{\Sigma M_y}{W} = \frac{2728.277}{(211+95+62+18)} = 7.06 \text{ in}$$

$$\Sigma M_z = (1.5 \times 211) + (95 \times 4) + (62 \times 7.75) - (18 \times 12.47)$$

$$= 952.54 \text{ lb-in}$$

$$z = \frac{\Sigma M_z}{W} = \frac{952.54}{(211+95+62+18)} = 2.47 \text{ in}$$

FIND THE CG OF ROLLER PIVOT WEDMENT

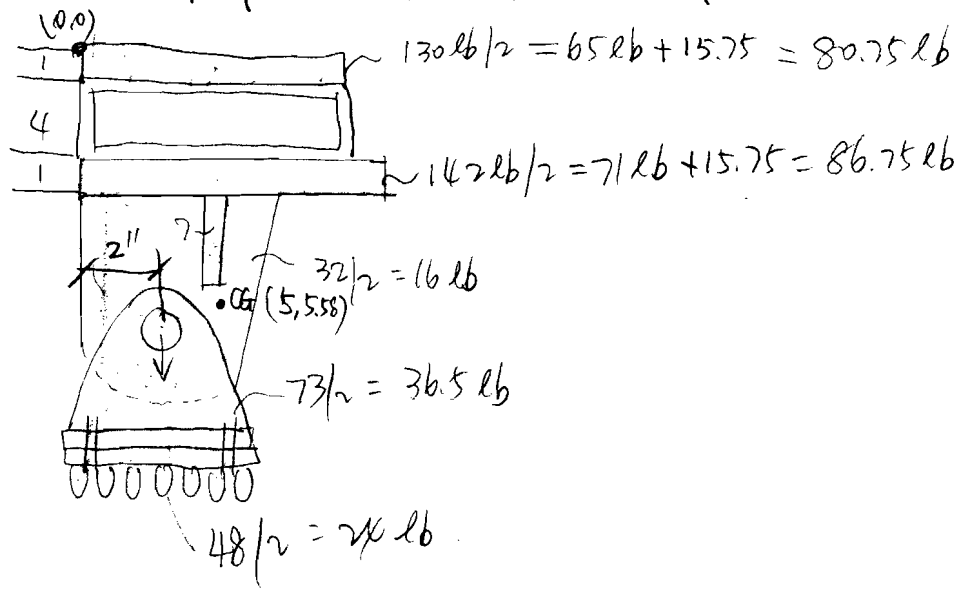

$$\Sigma M_y = [(36.5+24)\times 2] + (16\times 3.5) + (7\times 4.5) + (13.0/2 \times 86.75) + (11.88/2 \times 80.75)$$

$$= 1252.03 \text{ lb-in}$$

$$\Sigma M_y = \Sigma W \times Y$$

$$1252.03 = (251) \times Y$$

$$Y = 4.98 \approx 5''$$

$$\Sigma M_z = [(36.5+24)\times(5+1+1+4)] + [16\times(4+4+1+1)] + [7\times(2.5+4+1+1)] + [86.75\times(4+1+0.5)] + [80.75\times 0.5)]$$

$$= 1402.5 \text{ lb-in}$$

$$\Sigma M_z = \Sigma W \times Z$$

$$1402.5 = 251 \times Z$$

$$Z = 5.58 \text{ in}$$

FIND THE CENTER GRAVITY POINT WITH FULL SCINTILLATOR

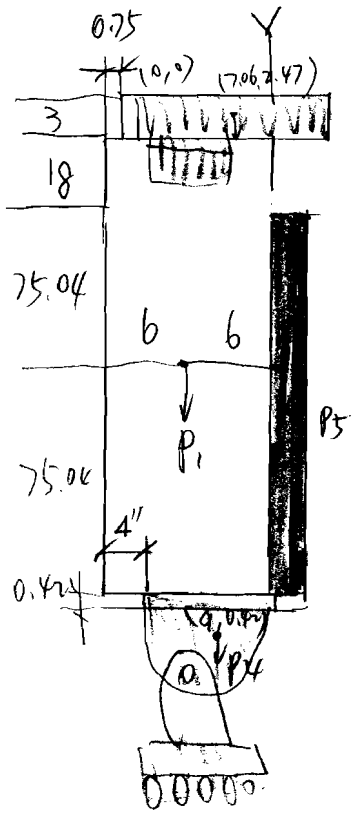

$P_1 = 4496$ lb

$P_2 = 7600$ lb

$P_3 = 386$ lb

$P_4 = 470$ lb

$P_5 = 308$ lb

$$\Sigma P = P_1 + P_2 + P_3 + P_4 + P_5$$
$$= 4496 + 7600 + 386 + 470 + 308$$
$$= 13260 \text{ lb}$$

$$\Sigma M_y = (P_1 \times 6) + (P_2 \times 12.5) + (P_3 \times 7.81) + (P_4 \times 9) + (P_5 \times 13.2)$$
$$= (4496 \times 6) + (7600 \times 12.5) + (386 \times 7.81) + (470 \times 9) + (308 \times 13.2)$$
$$= 133286.26$$

$$Y = \frac{\Sigma M_y}{\Sigma P} = \frac{133286.26}{13260} = \underline{\underline{10.05 \text{ in}}}$$

$$\Sigma M_z = (P_1 \times 96.04) + (P_2 \times 96.04) + (P_3 \times 2.47) + (P_4 \times 171.5) + (P_5 \times 96.04)$$

$$= (4496 \times 96.04) + (7600 \times 96.04) + (386 \times 2.47) + (470 \times 171.5) + (308 \times 96.04)$$

$$= 1272838.58 \text{ lb-in}$$

$$Z = \frac{\Sigma M_z}{\Sigma P} = \frac{1272838.58}{13260} = 95.99 \text{ in}$$

FIND THE CENTER GRAVITY POINT WITHOUT SCINTILATOR

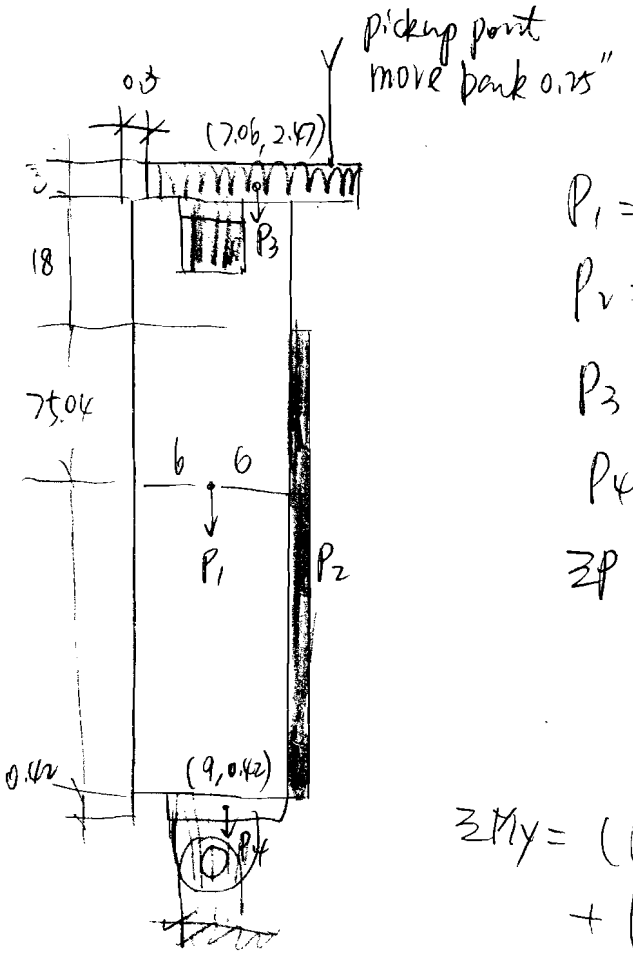

$P_1 = 4496\ lb$

$P_2 = 7600\ lb$

$P_3 = 386\ lb$

$P_4 = 470\ lb$

$$\Sigma P = P_1 + P_2 + P_3 + P_4$$
$$= 4496 + 7600 + 386 + 470$$
$$= 12952\ lb$$

$$\Sigma M_y = (P_1 \times 6) + (P_2 \times 12.5) + (P_3 \times 7.56) + (P_4 \times 9)$$
$$= (4496 \times 6) + (7600 \times 12.5) + (386 \times 7.56) + (470 \times 9)$$
$$= 129124.16\ lb\text{-}in$$

$$\bar{Y} = \frac{\Sigma M_y}{\Sigma P} = \frac{129124.16}{12952} = 9.97\ in$$

$$\Sigma M_z = (P_1 \times 96.04) + (P_2 \times 96.04) + (P_3 \times 2.47) + (P_4 \times 171.5)$$

$$= (4496 \times 96.04) + (7600 \times 96.04) + (386 \times 2.47) + (470 \times 171.5)$$

$$= 1243258.26 \text{ lb-in}$$

$$Z = \frac{\Sigma M_z}{\Sigma P} = \frac{1243258.26}{12952} = \underline{\underline{95.98 \text{ in}}}$$

From ideas results, knowing:

When full scitillator attached and the pickup point at fully extended position:

$$\alpha = 2.2^\circ$$

When no scitillator attached and the pickup point at fully extracted position:

$$\alpha = 2.1^\circ.$$

Therefore, the lifting device design is accurate.

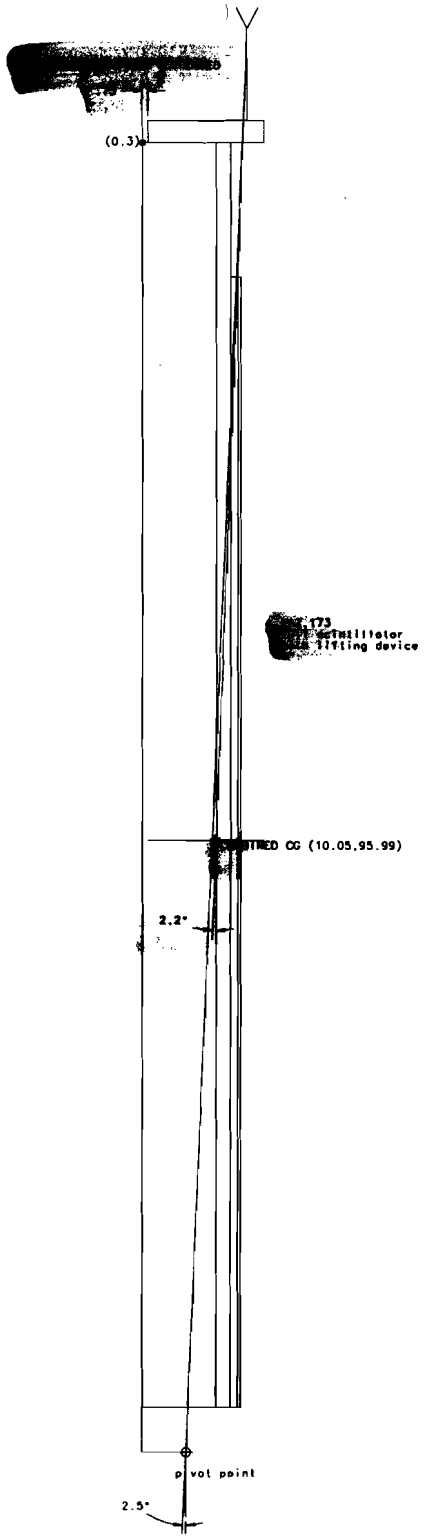
(0.3)
173
lifting device
CG (10.05,95.99)
2.2°
pivot point
2.5°

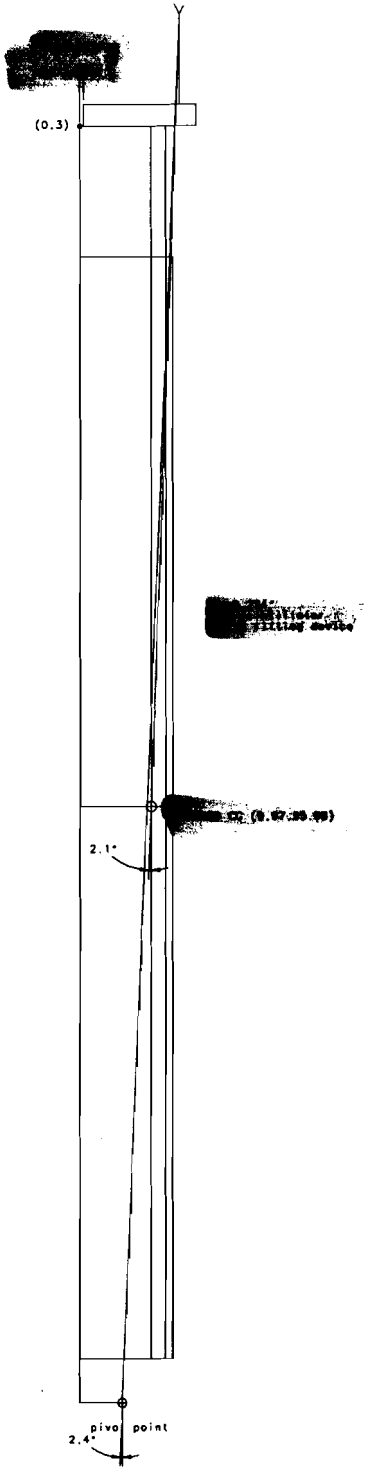
[redacted]
Y
(0.3)
[redacted]
[redacted]
2.1°
pivot point
2.4°