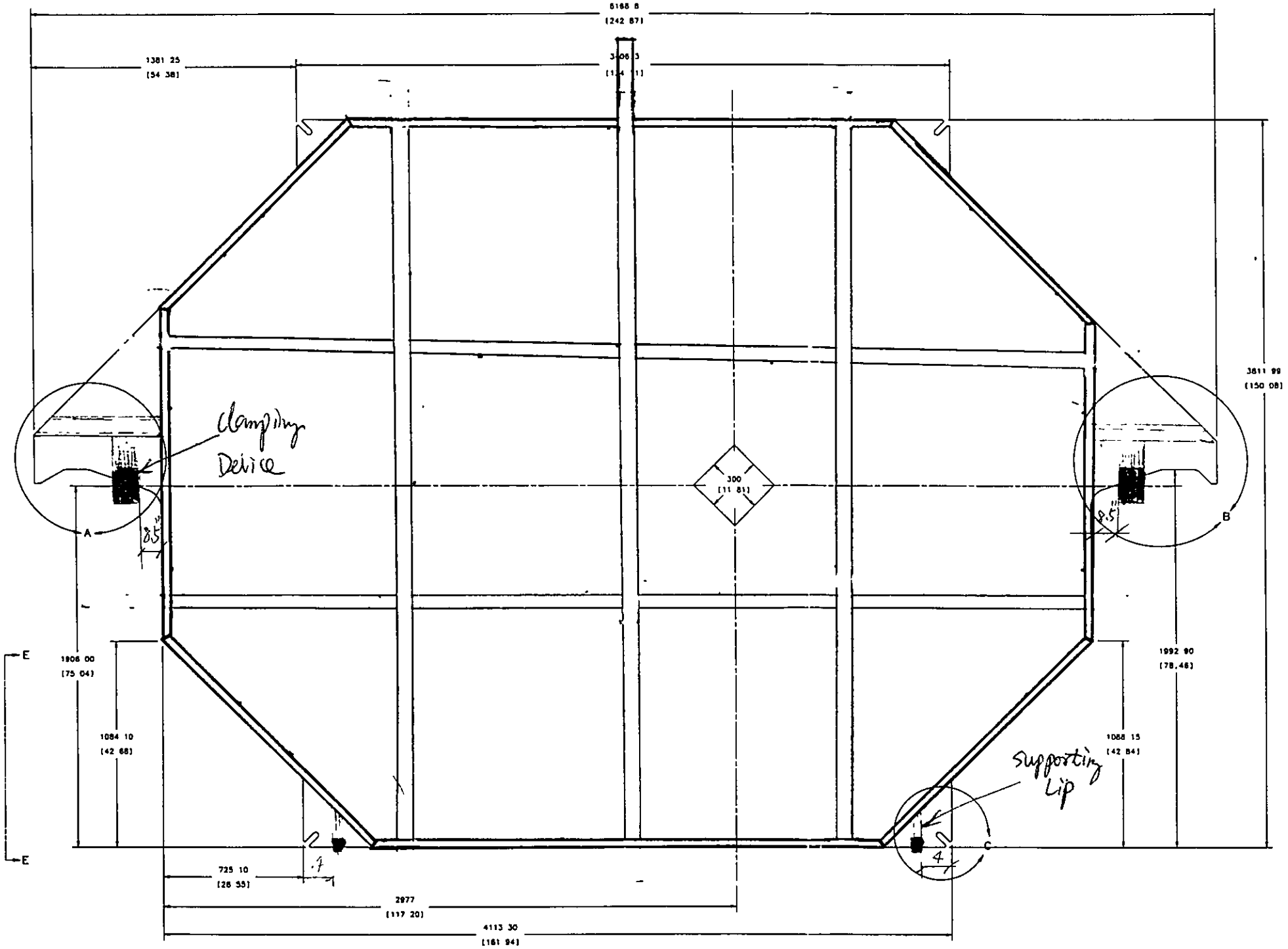

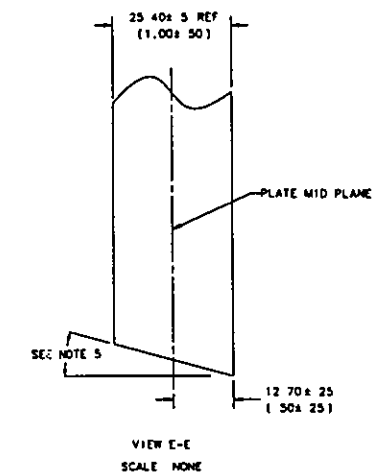

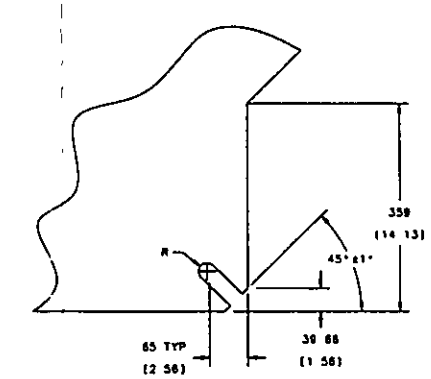

DETAIL C
SCALE. 1/4

9) ALL DIMENSION ARE IN MILLIMETERS AND INCHES.

8) APPROX WEIGHT = 3428 4 Kgms(7555 LBS).

7) FABRICATION AND HANDLING OF PARTS SHALL CONFORM TO FERMILAB SPEC.9216.000-SA-367185 ANY DEVIATION FROM THIS SPECIFICATION SHALL BE SUBMITTED TO FERMILAB FOR PRIOR APPROVAL

6) MATERIAL SHALL CONFORM TO FERMILAB SPEC. 9216 000-SA-367184

5) THE ANGLE CAUSED BY THE CUTTING OPERATION IS TO BE MINIMIZED THIS ANGLE, ONCE DETERMINED BY THE VENDOR, IS TO BE CONSISTANT WITHIN ±2° FOR ALL MINOS PLATES

4) ALL DIMENSION ORIGINATE FROM THE PLATE MID PLANE AS DEFINED IN VIEW D-D

3) BREAK EDGES 0.8-1 5 R OR CHAM.

2) SURFACE TEXTURE DEFINITIONS PER ANSI/ASME B46 1-1995 SURFACE TEXTURE SYMBOLS PER ANSI Y14 36-1978

1) DIMENSIONING AND TOLERANCING PER ASME Y14 5M-1994

NOTES. UNLESS OTHERWISE SPECIFIED.

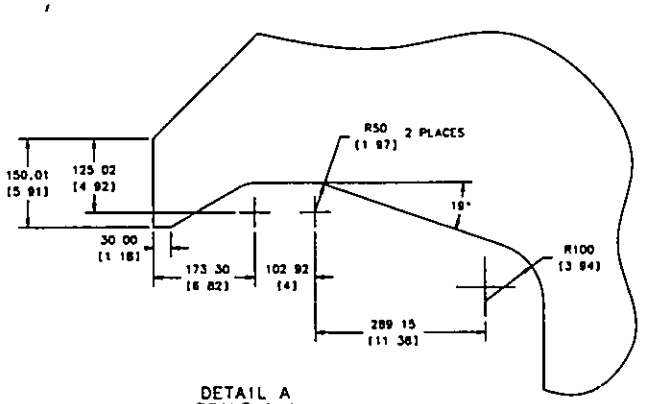

DETAIL A
SCALE 1/4

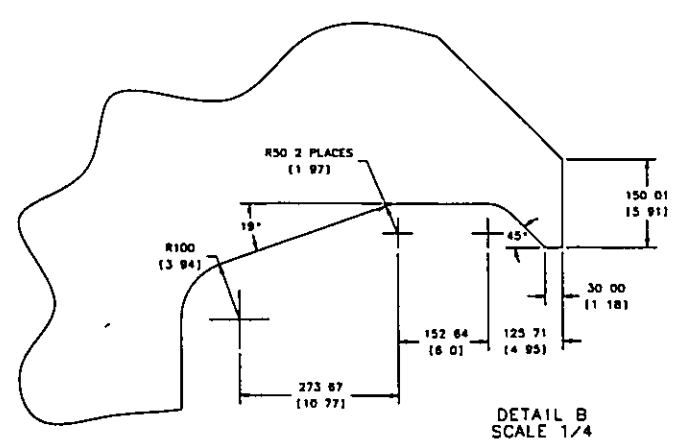

DETAIL B
SCALE 1/4

ITEM NO	PART NO	DESCRIPTION OR SIZE	QTY REQ
PARTS LIST			

DRAWN	JIM KILMER	5/98
DESIGN	TINA KUBICKA	5/27/98
CHECKED		
APPROVED		
USED ON		
MATERIAL	1" THICK SAE 1006 LOW CARBON STEEL	

FERMI NATIONAL ACCELERATOR LABORATORY
UNITED STATES DEPARTMENT OF ENERGY

PPD/MECHANICAL SUPPORT
MINOS
NEAR DETECTOR STEEL

SCALE 1/8 & NOTED | DRAWING NUMBER 9213.300-ME-367179 | SHEET NO. 1 OF 1 | REV

DESIGN THE CLAMPING DEVICE

1). Build an FEM model in ANSYS to determine the clamping forces.

2). Add 10% of vertical load as input load to the model

3). Rotate the model at various angle to see the plate deflection.

[redacted]

1). The plate deflection is equal to zero at the vertical position. That means the number of the clamping points are accurate.

2). Design loads are based on the worst case at 10° tilted forward position

FNPRT::WANDS via FNPRT

JOB 1300

CLAMP_DAT.LPD_17247B_0; 1

File: **1DKA100:[VMS$COMMON.DQS$SERVER]CLAMP_DAT.LPD_17247B_0;1**
Owner UIC: **DQS$SERVER**
Account: **FNPRT::**

Priority:	100
Submit queue:	WH11X_LW16_PS
Submitted:	30-APR-1999 08:36:59.06
Printer name:	wh11x_lw16@ppd wh printers
Executor queue:	WH11X_LW16_PS
VMS node:	FNPRT
Data Format:	TEXT
Form:	LTR_12

NOTE: This job was queued by DQS as number 1298 on node FNPRT by user WANDS at 30-APR-1999 08:36

NOTE: Remote LPD request from WANDS@RDALPH3 Job=597

```
/batch
/prep7
/tit, clamp analysis
c*********
c********* element types
c*********
et,1,63       ! plate
c*********
c********* material properties
c*********
ex,1,29e6
dens,1,(8/7.7)*(.284/386.4)
c*********
c********* real constants
c*********
r,1,1
c***********
c*********** keypoints
c***********
k,1,,-75.02
k,2,52.2,-75.02
k,3,kx(2)+14,ky(2)
k,4,kx(3),ky(3)+14
k,5,95.32,-32.2
k,6,kx(5),0
k,7,106.3,2
k,8,kx(7)+10,ky(7)
k,9,121.4,0
k,10,kx(9),ky(9)+6
k,11,kx(2),-ky(2)
k,12,0,-ky(1)
c******************* lines
l,1,2,10
l,2,3,4
l,3,4
l,4,5
l,5,6
l,6,7,4
l,7,8
l,8,9
l,9,10
l,10,11
l,11,12
l,1,12
save
c******************* area
al,all
aatt,1,1,1
c***********
c*********** mesh
c***********
esize,5
amesh,all
c***********
c*********** reflect
c***********
*get,inc,node,,num,max
nsym,1,inc,all
esym,,inc,all
numm,node
c***********
fini
/exit
```

PRINT F REACTION SOLUTIONS PER NODE

***** POST1 TOTAL REACTION SOLUTION LISTING *****

LOAD STEP= 1 SUBSTEP= 1
TIME= 1.0000 LOAD CASE= 0

THE FOLLOWING X,Y,Z SOLUTIONS ARE IN GLOBAL COORDINATES

NODE	FX	FY	FZ
7		1903.7	
14		1257.1	10.185
37	368.27		681.65
643		2395.8	
650		2290.6	10.185
673	631.73		681.65

TOTAL VALUES

VALUE	1000.0	7847.2	1383.7

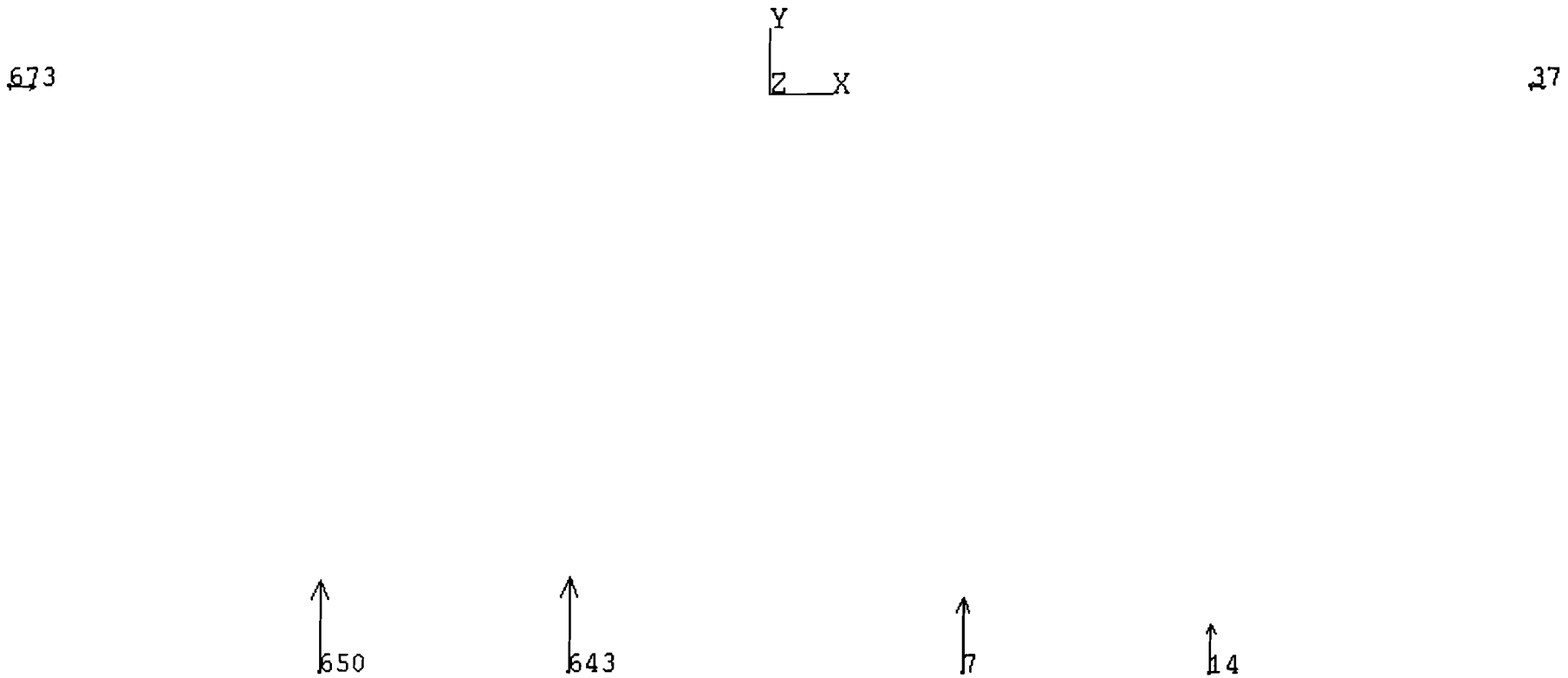

node for constraints

ANSYS

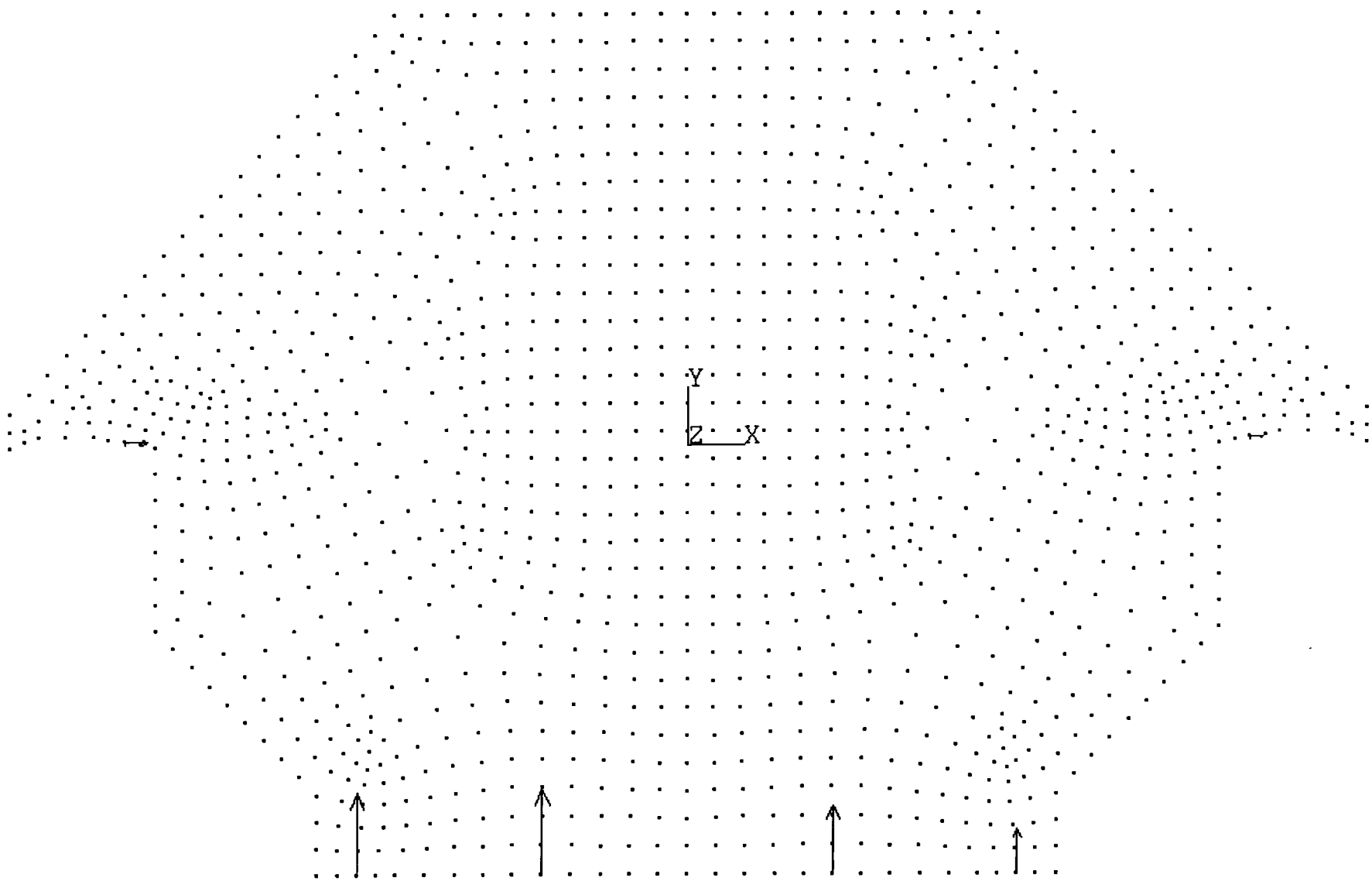

clam analysis

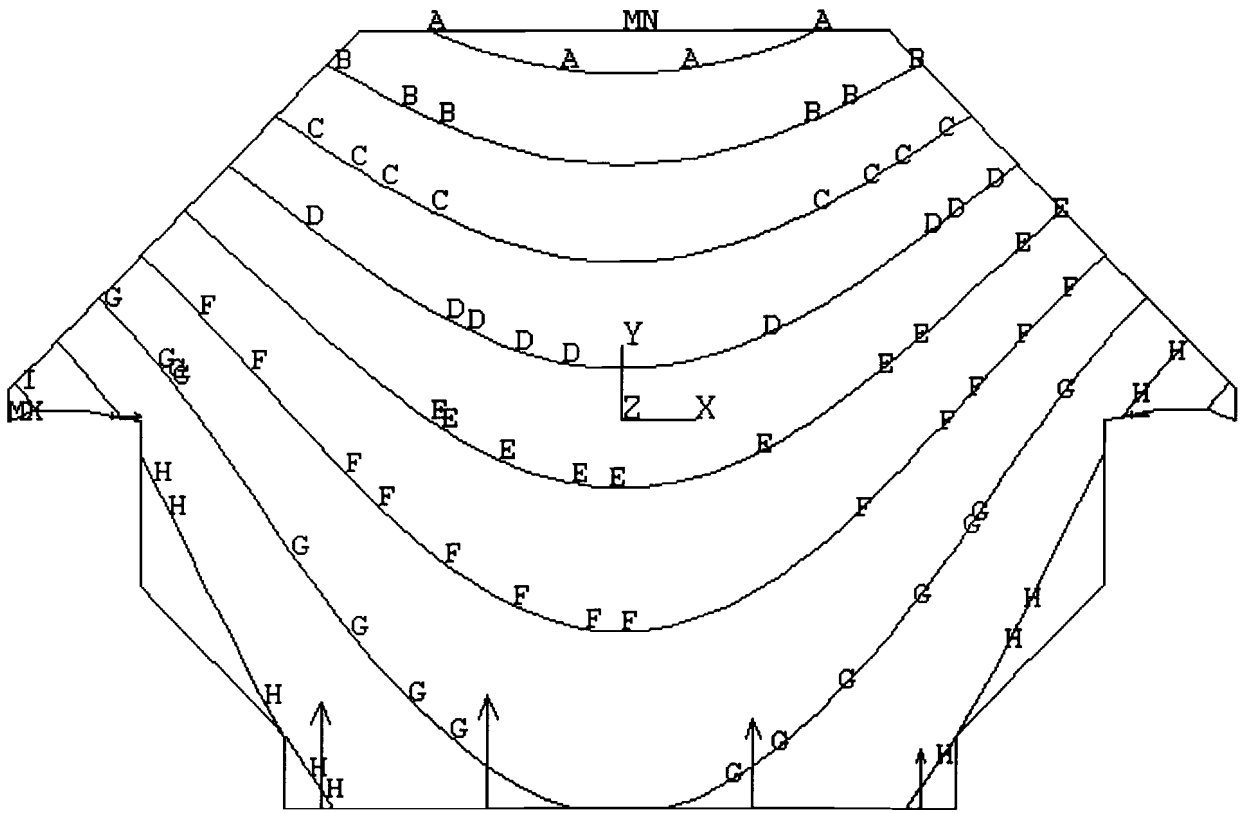

ANSYS 5.5.1SP
APR 30 1999
08:25:12
NODAL SOLUTION
STEP=1
SUB =1
TIME=1
UZ
TOP
RSYS=0
DMX =1.084
SEPC=7.021
SMN =-1.084
SMX =.200464
RFOR
A =-1.012
B =-.869562
C =-.726892
D =-.584222
E =-.441551
F =-.298881
G =-.156211
H =-.013541
I =.129129

out f plane displacement for 10 degree tilt

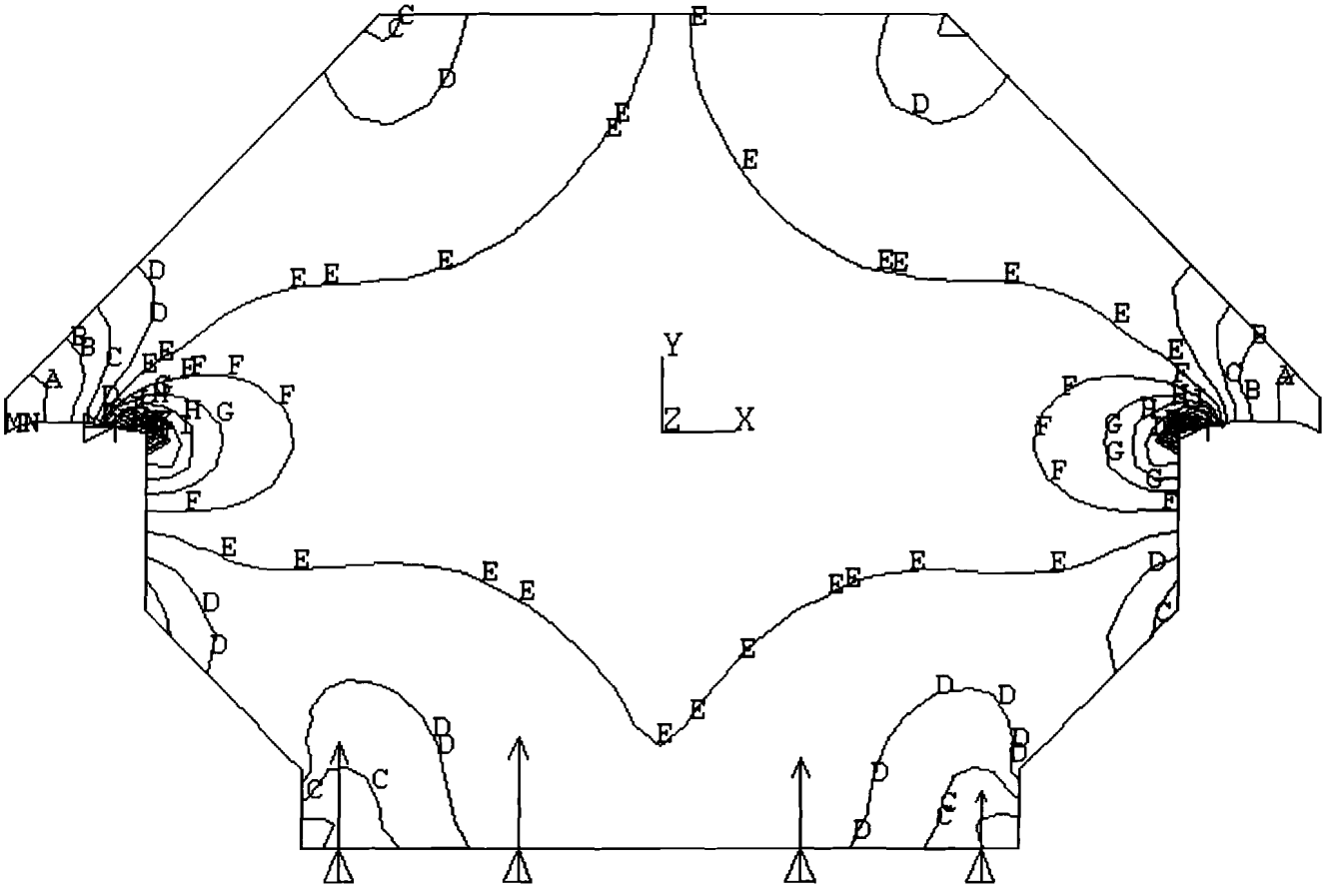

ANSYS 5.5.1SP
APR 30 1999
08:30:34
NODAL SOLUTION
STEP=1
SUB =1
TIME=1
SINT (AVG)
TOP
DMX =1.084
SMN =14.609
SMX =5942
SMXB=7035
U
RFOR
A =179.271
B =508.596
C =837.92
D =1167
E =1497
F =1826
G =2155
H =2485
I =2814
J =3143
K =3473
L =3802
M =4131
N =4460
O =4790
P =5119
Q =5448
R =5778

stre s intensity

FNPRT::WANDS

JOB 1516

CLAMP_90_1_EPS.LPD_14D 9DC_0;1

File: **1DKA200:[PRINTER_SPOOL]CLAMP_90_1_EPS.LPD_14D9DC_0;1**
Account: **G147_C**

Priority:	100
Submit queue:	WH11X_LW16_PS
Submitted:	30-APR-1999 09:19:02.98
Printer name:	wh11x_lw16@ppd wh printers
Executor queue:	WH11X_LW16_PS
VMS node:	FNPRT
Data Format:	POSTSCRIPT
Form:	PS_PLAIN

NOTE: Remote LPD request from WANDS@RDALPH3 Job=691

Digital Equipment Corporation
VAXshare Print Server V1.2 **VAX/VMS V5.5-2**

PRINT F REACTION SOLUTIONS PER NODE

***** POST1 TOTAL REACTION SOLUTION LISTING *****

LOAD STEP= 1 SUBSTEP= 1
TIME= 1.0000 LOAD CASE= 0

THE FOLLOWING X,Y,Z SOLUTIONS ARE IN GLOBAL COORDINATES

NODE	FX	FY	FZ
7		1936.7	
14		1284.7	-0.32962E-18
37	366.09		0.19980E-18
643		2428.7	
650		2318.2	0.22993E-18
673	633.91		-0.10011E-18

TOTAL VALUES

VALUE	1000.0	7968.3	-0.99898E-29

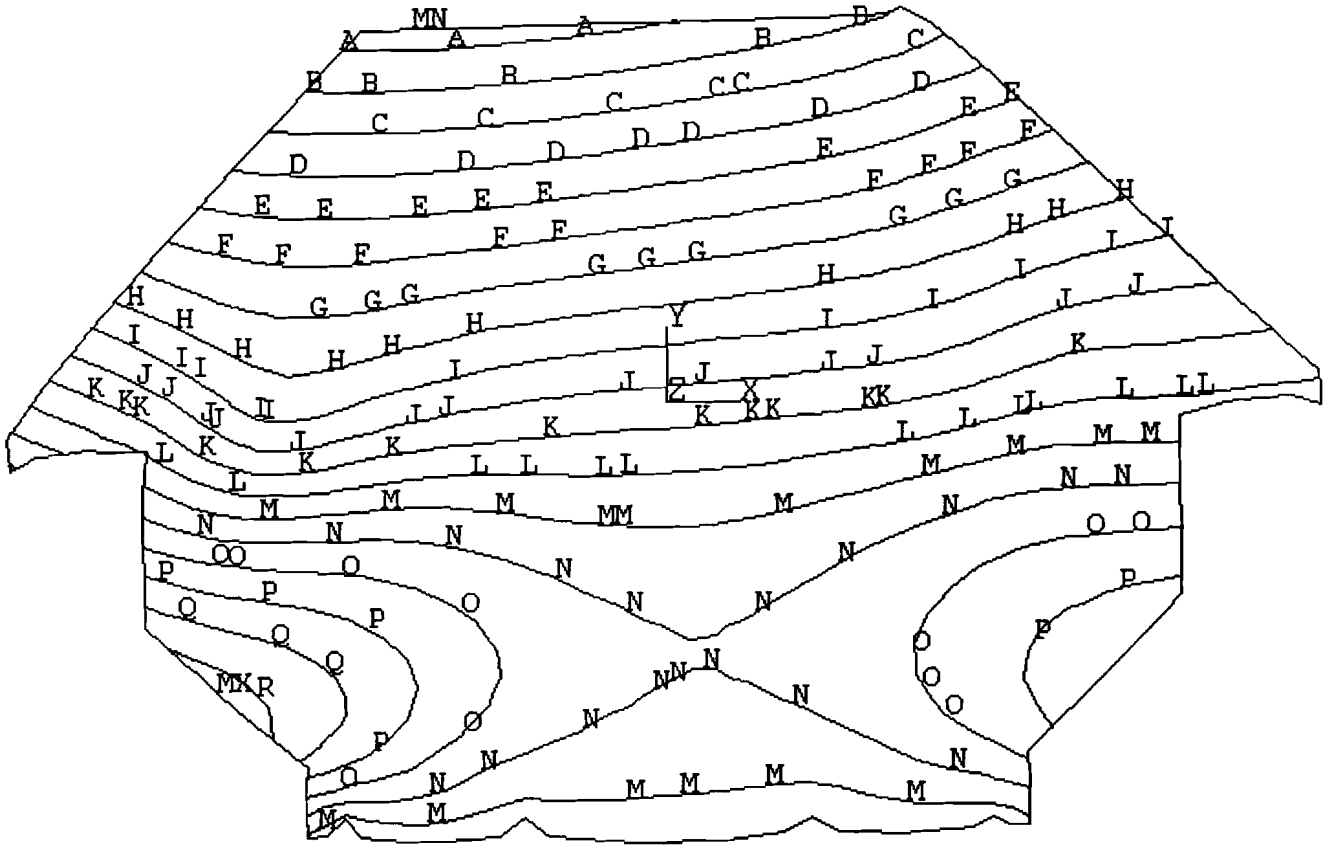

ANSYS 5.5.1SP
APR 30 1999
09:13:52
NODAL SOLUTION
STEP=1
SUB =1
TIME=1
UZ
TOP
RSYS=0
DMX =.462E-03
SEPC=42.533
SMN =0
SMX =0
A =0
B =0
C =0
D =0
E =0
F =0
G =0
H =0
I =0
J =0
K =0
L =0
M =0
N =0
O =0
P =0
Q =0
R =0

Out of plane displacement for 90 degrees

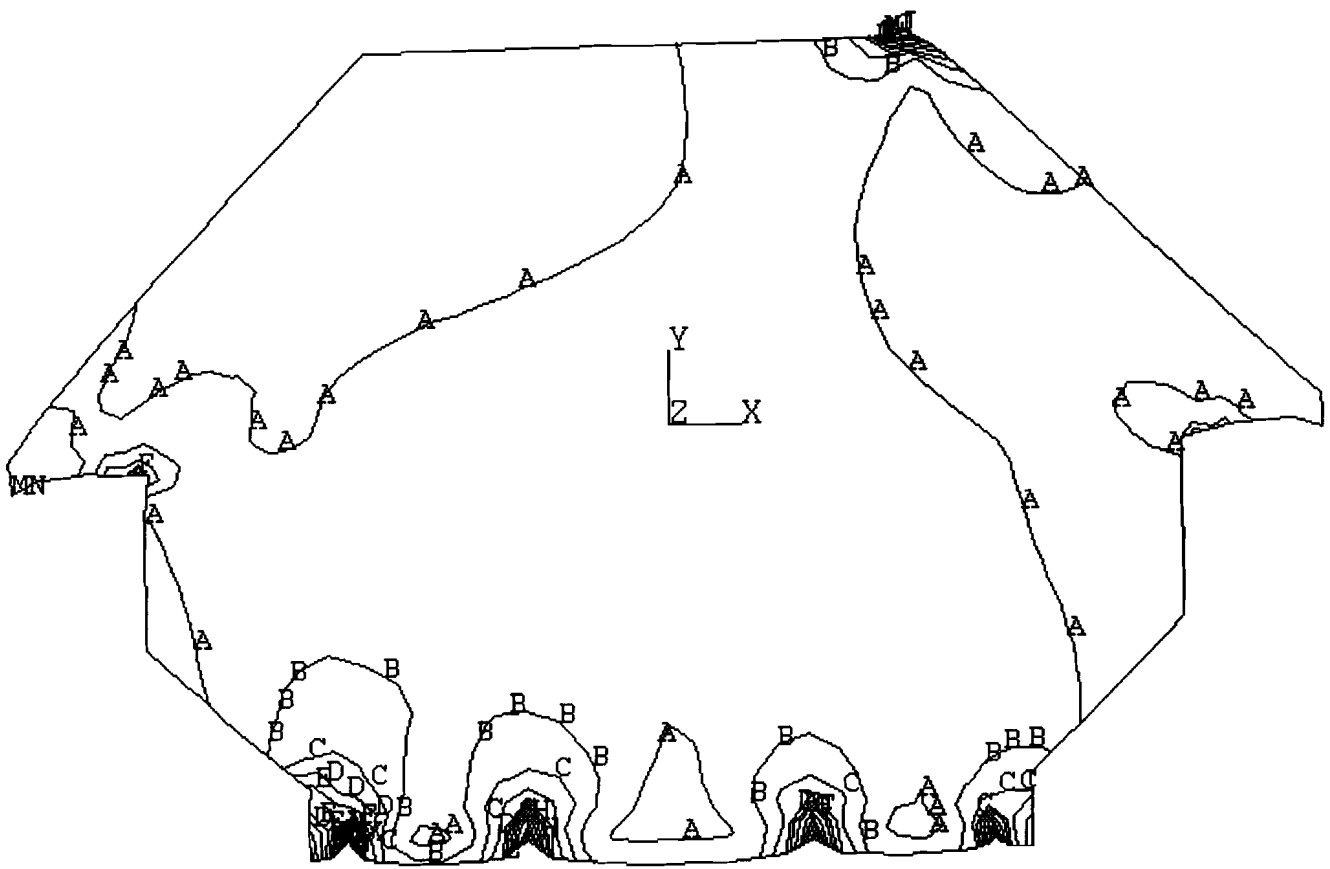

ANSYS 5.5.1SP
APR 30 1999
09:12:31
NODAL SOLUTION
STEP=1
SUB =1
TIME=1
SINT (AVG)
TOP
DMX =.462E-03
SMN =.391136
SMX =708.657
SMXB=941.78
A =20.065
B =59.413
C =98.761
D =138.109
E =177.458
F =216.806
G =256.154
H =295.502
I =334.85
J =374.198
K =413.546
L =452.894
M =492.242
N =531.591
O =570.939
P =610.287
Q =649.635
R =688.983

stress intensity for 90 degrees

CLAMPING DEVICE

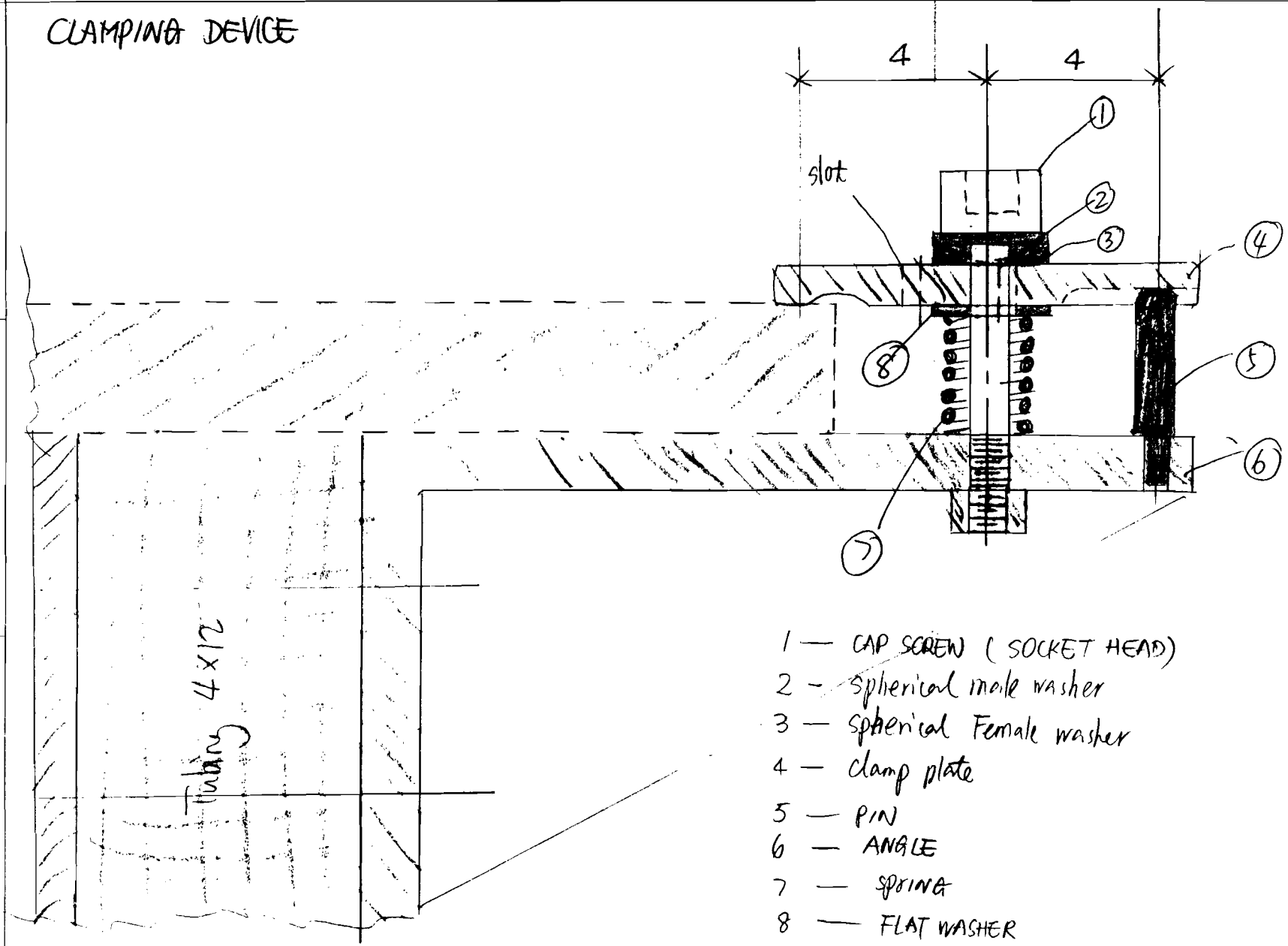

1 — CAP SCREW (SOCKET HEAD)
2 — spherical male washer
3 — spherical Female washer
4 — clamp plate
5 — PIN
6 — ANGLE
7 — SPRING
8 — FLAT WASHER

[redacted]

The Ansys model is built in horizontal impact load at 10° tilted position.

According to this analysis, the worst loads combination at nodes 37, and 673 are:

$F_x = 632$ lb (Friction force)

$F_z = 682$ lb. (clamping force)

According to Marks' standard handbook for Mechanical Engineers, Tenth Edition, page 3-21, knowing, Static Friction coefficient for steel on steel under Grease-free in air condition is 0.39, therefore.

$f = f_0 N$. where $f_0 = 0.39$

$N = 682$ lb

$f = 0.39 \times 682 = 265.98$ lb $\ll 632$ lb

N.G.

o Find the required clamping force N AT CONTACT POINT

$f = f_0 N$ where $f_0 = 0.39$

$f = 632$ lb

$$N = \frac{f}{f_0} = \frac{632}{0.39} = 1620.5 \text{ lb}.$$

○ FIND THE CLAMPING FORCE ON THE BOLT F

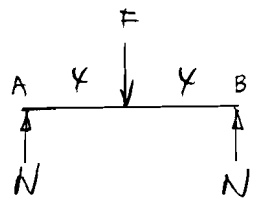

$F = 2N$ where $N = 1620.5$ lb

$F = 2 \times 1620.5$

$= 3241$ lb

○ CLAMPING PLATE UNDER BENDING STRESS IN WEAK AXIS

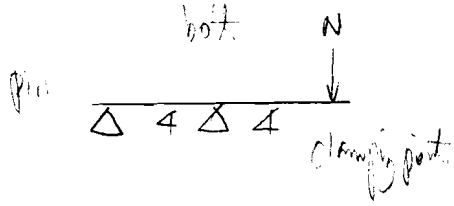

According to AISC, ASD, BEAM DIAGRAMS and Formulas, page 2-305, knowing Beam overhanging one support & concentrated load at end of overhang, the Max. moment is

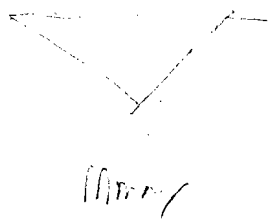

$M_{max} = P \times a$

where $P = N = 1620.5$ lb

$a = 4$ in

$M_{max} = 1620.5 \times 4$

$= 6482$ lb-in

From the previous study knowing, the allowable bending stress for ASTM A514 TYPE A T-1 Grade B is one third of the yield stress. Then,

$F_{bx} = \frac{M}{S_x}$ where $M = 6482$ lb-in

$F_{bx} = \frac{1}{3} F_y$ where $F_y = 100$ ksi for A514 Gr. B. T-1 TYPE A

$= \frac{1}{3} \times 100 = 33.3$ ksi

$$S_Y = \frac{M}{F_b} = \frac{6482}{33.33} = 0.194 \text{ in}^3$$

$$S_Y = \frac{bd^2}{6} \quad \text{where} \quad S_X = 0.194 \text{ in}^3$$

$$b = 4 - 1.5625 = 2.4375 \text{ in}$$

$$d = \sqrt{\frac{6S_Y}{b}}$$

$$= \sqrt{\frac{6 \times 0.194}{2.4375}} = 0.69 \text{ in}$$

use 3/4" thick plate

Therefore, the computed bending stress is

$$f_{bY} = \frac{M_Y}{S_Y} = \frac{6482}{\frac{1}{6} \times 3/4 \times 2.4375} = 28.4 \text{ ksi}$$

① CHECK THE DEFLECTION ON THE CLAMPING PLATE IN WEAK AXIS

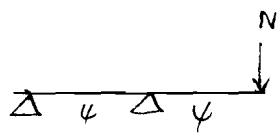

According to AISC, ASD, BEAM DIAGRAMS AND FORMULAS, page 2-305, knowing: 1) the maximum deflection between supports:

$$\Delta_{max1} = 0.06415 \frac{Pal^2}{EI}$$

where $P = N = 1620.5$ lb

$a = 4$ in

$l = 4$ in

$E = 29 \times 10^6$

$$I = \frac{bd^3}{12} = \frac{2.4375 \times 1^3}{12}$$

$$= 0.203 \text{ in}^4$$

$$\Delta_{max1} = 0.06415 \times \frac{1620.5 \times 4 \times 4^2}{29 \times 10^6 \times 0.203}$$

$$= 0.0012 \text{ in}$$

2). The maximum deflection for overhang

$$\Delta_{max2} = \frac{Pa^2}{3EI}(l+a)$$

where $P = N = 1620.5 \text{ lb}$

$a = 4 \text{ in}$

$E = 29 \times 10^6$

$I = 0.203 \text{ in}^4$

$l = 4 \text{ in}$

$$\Delta_{max2} = \frac{1620.5 \times 4^2}{3 \times 29 \times 10^6 \times 0.203}(4+4)$$

$$= 0.012 \text{ in}$$ — governs

The allowable deflection is

$$\frac{l}{480} = \frac{8}{480} = 0.017 \text{ in}$$

$$SF = \frac{0.017}{0.012} = 1.4$$

OK

O FIND THE BEARING STRESS (ALLOWABLE) Fp.

According to AISC, ASD, J3.7.2, page 5-74, knowing the allowable Bearing is

$F_p = 1.0\,F_u$ where $F_u = 110$ ksi for ASTM A514 Grade B F2 TYPE A.

$F_p = 110 \times 1.0 = 110$ ksi

According to ANSI/ASME, B30.20-1993 Below the Hook Lifting Device,

knowing,

$F_p = \frac{1}{3} F_y$ where $F_y = 100$ ksi for ASTM A514 TYPE A F Grade B

$F_p = \frac{1}{3} \times 100$

$= 33.3$ ksi — governs

O FIND THE BEARING STRESS IN THE CLAMPING AREA fp

$f_p = \frac{F}{A}$ where $F = 1620.5$ lb

$A = \frac{1}{2} \times 1.5 \times 4 = 3$ in^2

$f_p = \frac{1620.5}{3} = 0.540$ ksi

O FIND THE COMPUTED BEARING STRESS IN THE LONG SLOTTED HOLE. f_p

$$f_p = \frac{P}{\frac{d}{2} \times t} \quad \text{where} \quad P = 3241 \text{ lb}$$

$$d = 1.5 + 1/16 = 1.5625 \text{ in}$$

$$t = 1.0 \text{ in}$$

$$f_p = \frac{3241}{\frac{1.5625}{2} \times 1.0} = 4.148 \text{ ksi}$$

O FIND THE COMPUTED BEARING STRESS IN THE GROOVE f_p'

$$f_p' = \frac{P}{\frac{d}{2} t} \quad \text{where} \quad P = 1620.5 \text{ lb}$$

$$d = 1.250 \text{ in}$$

$$t = 0.25 \text{ in}$$

$$f_p' = \frac{1620.5}{\frac{1.250}{2} \times 0.25} = 10.371 \text{ ksi} \quad \text{— governs}$$

O FIND THE SAFETY FACTOR ON THE BEARING STRESS.

$$f_p' = 10.371 \text{ ksi}$$

$$F_p = 33.3 \text{ ksi}$$

$$SF = \frac{F_p}{f_p'} = \frac{33.3}{10.371} = 3.2$$

— SKETCH THE CLAMPING PLATE

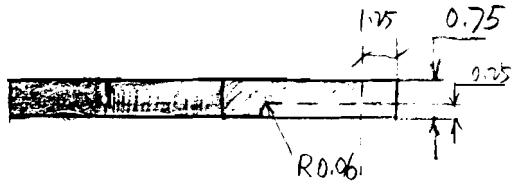

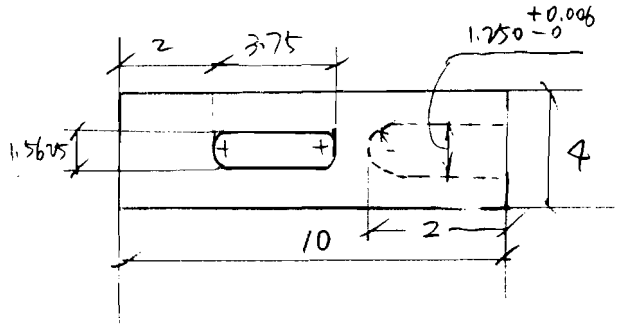

TOLERANCE FOR HOLE H11.

From Table A-13, "Mechanical Engineering Design" Shigley, page 745, knowing the tolerance grade IT11 is $\Delta d = 0.0063$ in

$D_{max} = D + \Delta d = 1.25 + 0.0063 = 1.2563$ in

$D_{min} = D = 1.25$ in

$\boxed{1.250^{+0.006}_{-0}}$

- CLAMPING PLATE UNDER BENDING STRESS IN STRONG AXIS

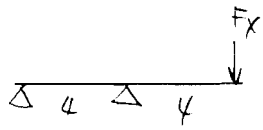

From the previous study, knowing,

$$M_{max} = P \times a$$

where $P = F_x = 632$ lb

$a = 4$ in

$$M_{max} = 632 \times 4 = 2528 \text{ lb-in}$$

- FIND THE SECTION MODULUS S_X

$$S_X = \frac{bd^2}{6} \quad \text{where } b = 0.75 \text{ in}$$

$d = 2.4375$ in

$$S_X = \frac{2.4375^2 \times 0.75}{6} = 0.74 \text{ in}^3$$

- FIND THE COMPUTED BENDING STRESS

$$f_{bx} = \frac{M}{S} \quad \text{where } M = M_{max} = 2528 \text{ lb-in}$$

$S = S_X = 0.74 \text{ in}^3$

$$f_{bx} = \frac{2528}{0.74} = 3.4 \text{ ksi}$$

From the previous study, knowing the allowable Bending stress is 33.3 ksi, therefore, the bi-axial bending stresses

$$\frac{f_{by}}{F_{by}} + \frac{f_{bx}}{F_{bx}} \leq 1.0$$

$$\frac{28.4}{33.3} + \frac{3.4}{33.3} = 0.95 < 1.0 \quad \underline{\text{OK}}$$

$$SF = \frac{1.0}{0.95} = 1.04$$

O CHECK THE DEFLECTION ON THE CLAMPING PLATE IN STRONG AXIS.

The maximum deflection for overhang:

$$\Delta_{max} = \frac{Pa^2}{3EI}(l+a)$$

where $P = 632\ lb$

$a = 4\ in$

$E = 29 \times 10^6$

$I = \frac{bd^3}{12} = \frac{0.75 \times 2.4375^3}{12} = 1.207\ in^4$

$l = 4\ in$

$$\Delta_{max} = \frac{632 \times 4^2}{3 \times 29 \times 10^6 \times 1.207} \times (4+4)$$

$$= 0.0008\ in \ll 0.017\ in$$

$$SF = \frac{0.017}{0.0008} = 21$$

[redacted]

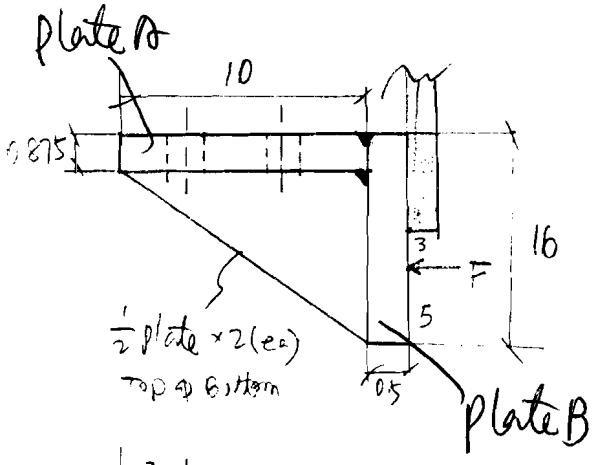

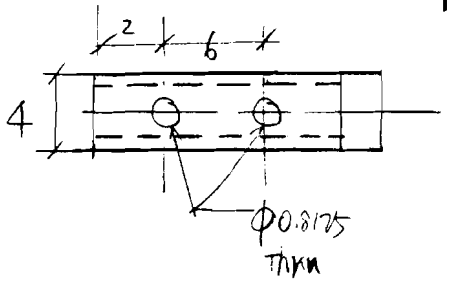

① FIND THE BENDING STRESS Plate B

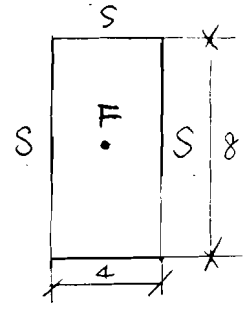

According to Roark's Formulas for Stress & Strain, page 460, known Rectangular plate, three edges Simply supported, one edge free, Uniform over entire plate, the max stress is

$$\sigma = \frac{\beta q b^2}{t^2}$$

Where $\beta = 0.32$

$b = 4$ in

$q = \frac{F}{A} = \frac{324}{8 \times 4} = 101.3$ lb/in²

$t = 0.5$ in

$$\sigma = \frac{0.32 \times 101.3 \times 4^2}{0.5^2}$$

$= 2.075$ ksi

From the previous study, knowing the allowable stress is 12 ksi. Therefore, the safety factor is

$$SF = \frac{12}{2.075} = 5.78$$

0 CHECK THE DEFLECTION ON THE PLATE.

According to Roark's Formulas for stress & strain, page 460, knowing, Rectangular plate, three edges simply supported, one edge free, uniform load over entire plate, the maximum deflection is

$$Y = \frac{\alpha q b^4}{E t^3}$$

Where $q = 101.3\ lb/in^2$

$\alpha = 0.058$

$b = 4\ in$

$E = 29 \times 10^6$

$t = 0.5\ in$

$$Y = \frac{0.058 \times 101.3 \times 4^4}{29 \times 10^6 \times 0.5^3}$$

$$= 0.0004\ in$$

The deflection can be neglected.

FIND THE BENDING STRESS ON PLATE A

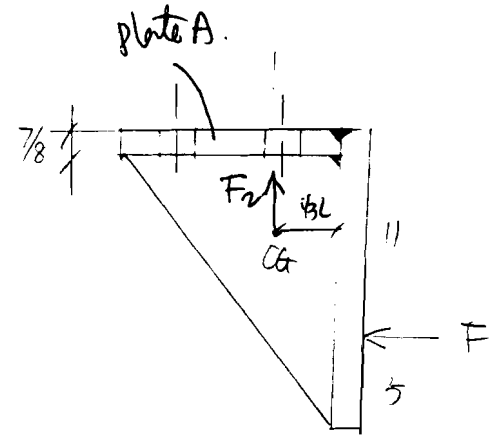

$$\Sigma M_{CG} = 0$$

$$F \times 11 = F_v \times \tfrac{1}{3}L$$

where $F = 3241$ lb

$L = 10$ in

$$F_v = \frac{F \times 11}{\tfrac{1}{3}L}$$

$$= \frac{3241 \times 11}{\tfrac{1}{3} \times 10} = 10695.3 \text{ lb}$$

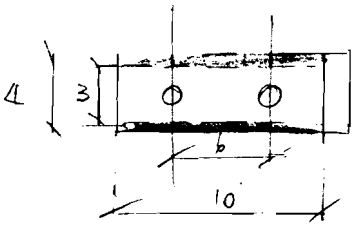

Assume, both ends are simple support

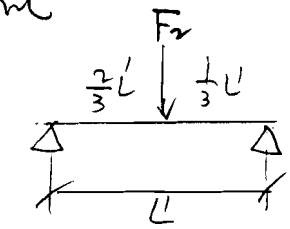

where $L' = 3$ in

According to AISC, ASD, page 2-298, "BEAM DIAGRAMS AND FORMULAS" Simple Beam — Concentrated load at any point.

$$M_{max} = \frac{Pab}{l}$$

where $P = F_v = 10695.3$ lb

$a = \frac{2}{3} \times 3 = 2$ in

$b = \frac{1}{3} \times 3 = 1$ in

$l = 3$ in

$$M_{max} = \frac{10695.5 \times 1 \times 2}{3} = 7130.2 \text{ lb-in}.$$

- FIND THE SECTION MODULUS S_x.

$$S_x = \frac{bd^2}{6} \quad \text{where } b = 10 \text{ in}, \quad d = 0.875 \text{ in}$$

$$S_x = \frac{10 \times 0.875^2}{6} = 1.276 \text{ in}^3$$

- FIND THE COMPUTED BENDING STRESS

$$f_{bx} = \frac{M}{S_x} \quad \text{where } M = M_{max} = 7130.2 \text{ lb-in}, \quad S_x = 1.276 \text{ in}^3$$

$$f_{bx} = \frac{7130.2}{1.276} = 5.587 \text{ ksi}$$

- FIND THE SAFETY FACTOR ON BENDING STRESS

From the previous study known:

$F_{bx} = 12$ ksi for A36

$f_{bx} = 5.587$ ksi

$$SF = \frac{12}{5.587} = 2.14.$$

OK

[redacted] THE CONNECTION BETWEEN THE TUBING & THE PLATE

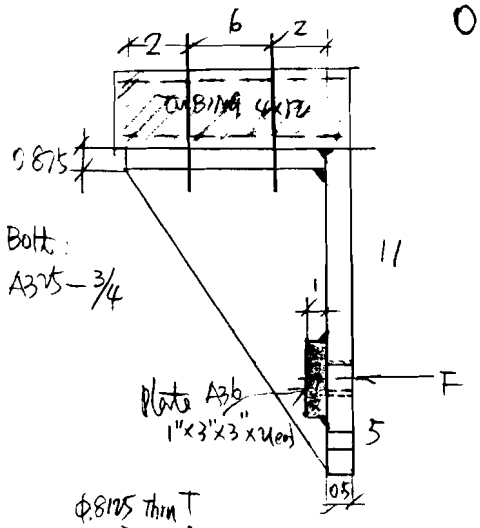

○ FIND THE TENSION ON THE BOLTS

$M = P \times e$ where $P = 3241$ lb

$e = 11.0$ in

$M = P \times e$

$= 3241 \times 11 = 35651$ lb-in

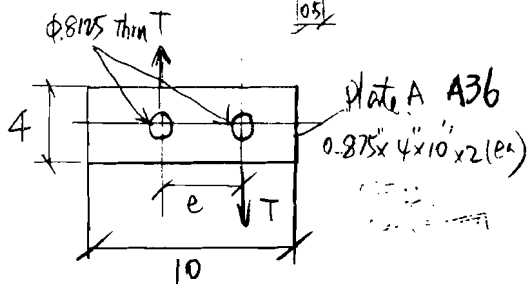

$M = T \times e$ where $M = 35651$ lb-in

$e = 6$ in

$$T = \frac{M}{e} = \frac{35651}{6} = 5942 \text{ lb}$$

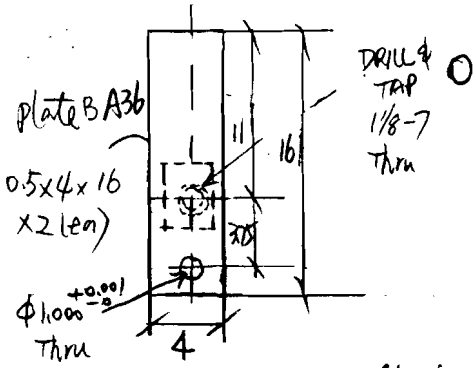

○ FIND THE COMPUTED TENSILE STRESS f_t.

$f_t = \frac{P}{A}$ where $P = T = 5942$ lb

$A = 0.4418$ in² for 3/4" Bolt

$$f_t = \frac{5942}{0.4418} = 13.45 \text{ ksi}$$

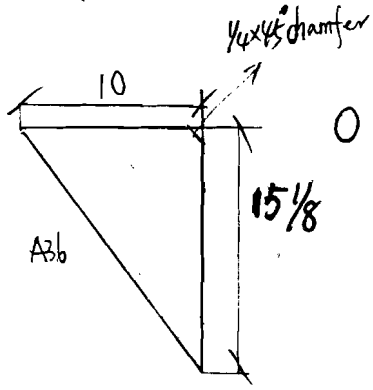

○ FIND THE ALLOWABLE TENSILE STRESS F_t.

From Table J3.2, AISC, ASD, page 5-73, knowing, the allowable tension for A325 bolt is 44 ksi.

Plate: 0.5x10x15 1/8 x 2(ea)

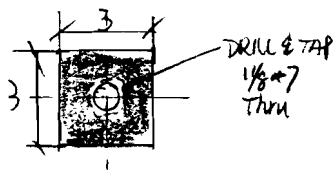

According to ANSI/ASME B30.20-1993, Below the Hook Lifting Devices, knowing:

$F_t = \frac{1}{3} F_y$ where $F_y = 92$ ksi for A325.

$F_t = \frac{1}{3} \times 92 = 30.6$ ksi — governs.

O FIND THE SAFETY FACTOR ON TENSILE STRESS.

$f_t = 13.45$ ksi

$F_t = 30.6$ ksi

$$SF = \frac{F_t}{f_t} = \frac{30.6}{13.45} = 2.3$$

O CHECK THE DEFLECTION ON SIDE WALL OF 6X12 TUBING

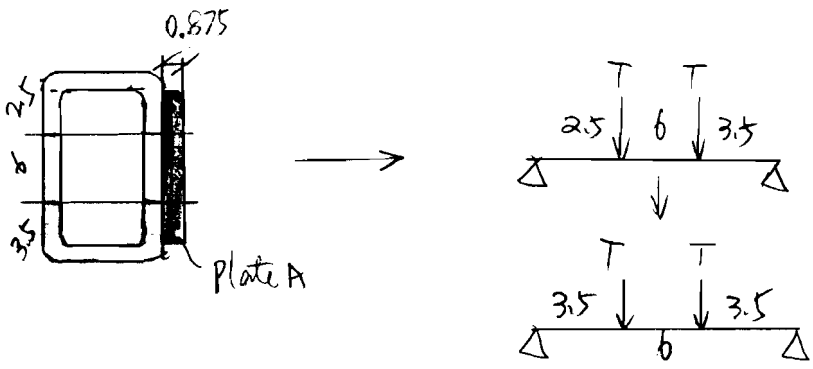

From previous study, knowing, $T = 5942$ lb

According to AISC, ASD, Beam Diagrams, page 2-298, knowing, the maximum deflection at center is

$$\Delta_{max} = \frac{Pa}{24EI}(3\ell^2 - 4a^2)$$

where $p = 5942\ lb$

$a = 3.5\ in$

$E = 29 \times 10^6$

$I = \frac{bd^3}{12} = \frac{4 \times 0.3125^3}{12} = 0.010\ in^4$

$l = 12\ in$

$$\Delta_{max} = \frac{5942 \times 3.5}{24 \times 29 \times 10^6 \times 0.010} \left(3 \times 12^2 - 4 \times 3.5^2\right)$$

$$= 1.135\ in$$

Since the deflection is so large, a stiffner plate is needed. The plate size is the same as plate A.

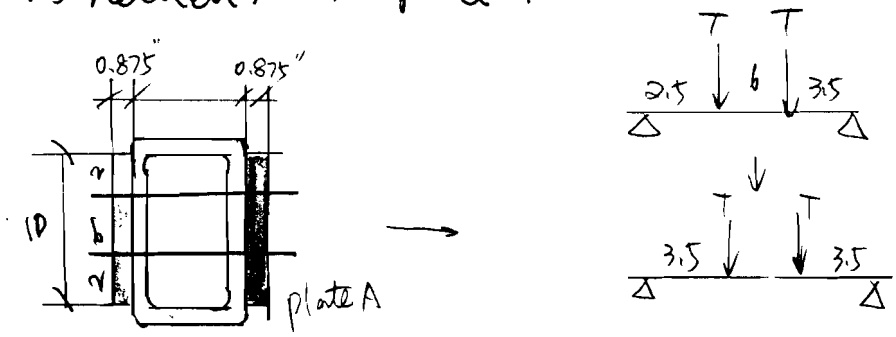

From previous study, knowing, The maximum deflection at center is

$$\Delta_{max} = \frac{pA}{24EI}\left(3l^2 - 4a^2\right)$$

where, $p = 5942\ lb$

$a = 3.5\ in$

$E = 29 \times 10^6$

According to suggested assembly torque value for Bolt 3/4" A325 to produce corresponding Bolt Load, knowing the clamp load is 21300 lb.

Therefore, the required the torque needs to be investigated.

From the previous study, knowing: Section C page 23-a

when clamping force $P = 8983$ lb. the corresponding torque is 1314 lb-in.

Since the load on the bolt is 5942 lb. less than the 8983 lb,

Applying 1314 lb-in will be sufficient enough for this application.

$$I = \frac{bd^3}{12} = \frac{4\,(0.3125^3 + 0.875^3)}{12} = 0.233 \text{ in}^4$$

$$l = 12 \text{ in}$$

$$\Delta_{max} = \frac{5942 \times 3.5}{24 \times 29 \times 10^6 \times 0.} \left(3 \times 12^2 - 4 \times 3.5^2 \right)$$

$$= 0.049 \text{ in}$$

From the previous study, knowing the allowable maximum deflection is

$$\frac{l}{180} = \frac{12}{180} = 0.067 \text{ in}$$

therefore, the safety factor on the deflection is

$$SF = \frac{0.067}{0.049} = 1.37$$

① DESIGN THE WELDS ON THE GUSSETS

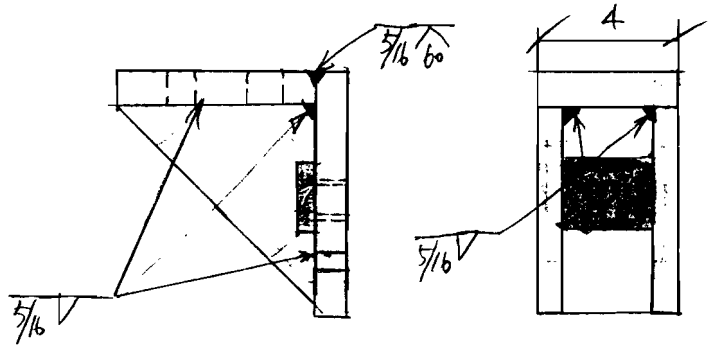

According to AISC, ASD, J2.2, Table J2.4, page 5-67, knowing, the minimum size of fillet weld is 5/16".

According to AISC, ASD, J2.1, Table J2.3, page 5-66, knowing, the minimum size of single v-groove weld is 5/16"

O FIND THE CONNECTING BOLT LENGTH:

Bolt length = the total thickness of all connected material + Grip + washer.

$= (4 + 0.875 + 0.875) + (1) + (5/32)$

$= 6.9$ in

use 7"

Bolt: 3/4-10-UN-2A × 7" long × 2 (each)
(medium carbon steel, type a) HEX Height 1/2"

Nut: A194 grade 2 for Bolt 3/4" dia (hardened)
Nut height 3/4"

Washer: F436 hardened flat washer for bolt 3/4" dia
washer height 5/32"

0 FIND THE TOLERANCE ON THE PIN HOLE.

For $\phi 1.0$, locational clearance fit for Hole is H7.

From Table A-13, "Mechanical Engineering Design" Shigley, page 745, knowing: the tolerance grade IT7 for the Hole is $\Delta d = 0.0008$ in

$$D_{max} = D + \Delta d = 1.0000 + 0.0008 = 1.0008 \text{ in}$$

$$D_{min} = D = 1.0000 \text{ in}$$

$$\boxed{1.000^{+0.001}_{-0}}$$

0 FIND THE WELD SIZE ON THE SQUARE PLATE

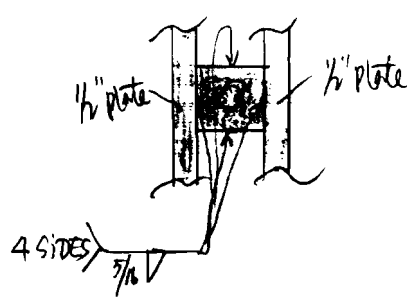

According to AISC, ASD, Table J2.4. page 5-67, knowing:

the minimum size of fillet weld is 5/16".

[redacted]

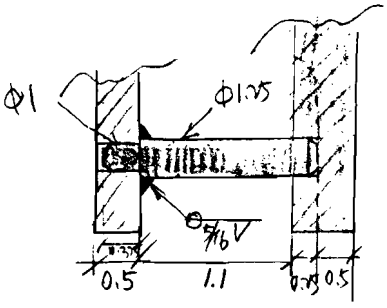

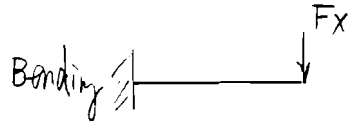

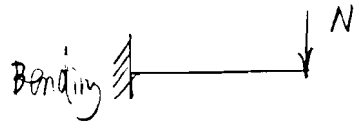

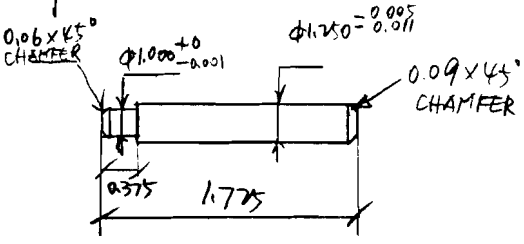

material: C1018 cold drawn

From the previous study, knowing

$F_x = 632\ lb$

$N = 1620.5\ lb$

① FIND THE SLENDERNESS RATIO

$\frac{Kl}{r}$ where $K = 2$

$l = 1.35\ in$

$r = \sqrt{\frac{I}{A}}$

where $I = \frac{\pi d^4}{64}$

$= \frac{\pi \times 1.25^4}{64}$

$= 0.12\ in^4$

$A = \frac{1}{4}\pi d^2$

$= \frac{1}{4} \times \pi \times 1.25^2$

$= 1.23\ in^2$

therefore, $r = \sqrt{\frac{I}{A}} = \sqrt{\frac{0.12}{1.23}} = 0.31\ in$

then, $\frac{Kl}{r} = \frac{2 \times 1.35}{0.31} = 8.7$

O FIND THE ALLOWABLE COMPRESSION STRESS Fa

For Cold Rolled C1018, $F_y = 54$ ksi. According to AISC, ASD Table 4, page 5-120, knowing column slenderness ratio C_c equals to 102. therefore

$$\frac{Kl}{r} = 8.7 < C_c = 102$$

According to AISC, ASD, E2, page 5-42, knowing, the allowable stress is permitted by EQ (E2-1).

$$F_a = \frac{\left[1 - \frac{(Kl/r)^2}{2C_c^2}\right] F_y}{\frac{5}{3} + \frac{3(Kl/r)}{8C_c} - \frac{(Kl/r)^3}{8C_c^3}}$$

Where $\frac{Kl}{r} = 8.7$

$F_y = 54$ ksi

$C_c = 102$

$$F_a = \frac{\left[1 - \frac{8.7^2}{2\times 102^2}\right] \times 54}{\frac{5}{3} + \frac{3\times 8.7}{8\times 102} - \frac{8.7^3}{8\times 102^3}} = 31.06 \text{ ksi}$$

According to ANSI/ASME B30.20-1993, Below the Hook Lifting Device, knowing:

$F_a = \frac{1}{3} F_y$ where $F_y = 54$ ksi for C1015 Cold Rolled

$F_a = \frac{1}{3} \times 54 = 18$ ksi —— governs

○ FIND THE COMPUTED COMPRESSION STRESS f_a.

$f_a = \frac{P}{A}$ where $P = 1620.5$ lb

$A = 1.23$ in^2

$f_a = \frac{1620.5}{1.23} = 1.317$ ksi

○ FIND THE ALLOWABE BENDING STRESS IN X DIRECTION, F_{bx}

According to AISC, ASD, F2, page 5-48, knowing, the allowable bending stress is

$F_{bx} = 0.60\,F_y$ where $F_y = 54$ ksi for CR1018

$F_{bx} = 0.60 \times 54$

$= 32.4$ ksi

According to ANSI / ASME, B30.20-1993, Below the Hook Lifting Device, knowing.

$F_{bx} = \frac{1}{3} F_y$ where $F_y = 54$ ksi for CR1018

$F_{bx} = \frac{1}{3} \times 54 = 18$ ksi —— governs

○ FIND THE COMPUTED BENDING STRESS IN X DIRECTION, f_{bx}

$M_{max} = P \cdot a$ where $P = 1620.5$ lb

$a = 1.35$ in

$M_{max} = 1620.5 \times 1.35$

$= 2188$ lb-in

$S_x = \frac{\pi d^3}{32}$ where $d = 1.25$ in

$S_x = \frac{\pi \times 1.25^3}{32} = 0.19 \text{ in}^3$

$f_{bx} = \frac{M}{S}$ where $M = 2188$ lb-in

$S_x = 0.19 \text{ in}^3$

$f_{bx} = \frac{2188}{0.19} = 11.514$ ksi

0 FIND THE ALLOWABLE BENDING STRESS IN Y AXIS F_{by}.

According to AISC, ASD, F2, page 5-48, knowing, the allowable bending stress is

$F_{by} = 0.60 F_y$ where $F_y = 54$ ksi for CR 1018

$F_{by} = 0.60 \times 54$

$= 32.4$ ksi

According to ANSI/ASME, B30.20-1993, Below the Hook Lifting Device, knowing:

$F_{by} = \frac{1}{3} F_y$ where $F_y = 54$ ksi for CR 1018

$F_{by} = \frac{1}{3} \times 54 = 18$ ksi — governs

O FIND THE COMPUTED BENDING STRESS IN Y AXIS, f_{by}

$M_{max} = Pa$ where $P = 632\ lb$
$a = 1.35\ in$

$M_{max} = 632 \times 1.35$
$= 853.2\ lb\text{-}in$.

$S_y = \frac{\pi d^3}{32}$ where $d = 1.25\ in$
$= \frac{\pi \times 1.25^3}{32}$
$= 0.19\ in^3$

$f_{by} = \frac{M}{S_y}$ where $M = 853.2\ lb\text{-}in$
$S_y = 0.19\ in^3$

$f_{by} = \frac{853.2}{0.19} = 4.491\ ksi$

O FIND THE COMBINED STRESSES.

According to AISC, ASD, H1, page 5-54, knowing, when $f_a/F_a \leq 0.15$, EQ (H1-3) is permitted.

$\frac{f_a}{F_a}$ where $f_a = 1.317\ ksi$
$F_a = 18\ ksi$

$\frac{f_a}{F_a} = \frac{1.317}{18} = 0.073 < 0.15$.

Therefore,

$$\frac{f_a}{F_a} + \frac{f_{bx}}{F_{bx}} + \frac{f_{by}}{F_{by}} \leq 1.0 \quad \text{(Eq H1-3)}$$

Where $f_a = 1.317$ ksi

$F_a = 18$ ksi

$f_{bx} = 11.514$ ksi

$F_{bx} = 18$ ksi

$f_{by} = 4.491$ ksi

$F_{by} = 18$ ksi

$$\frac{1.317}{18} + \frac{11.514}{18} + \frac{4.491}{18} = 0.96 < 1.0 \qquad SF = 1.03$$

○ FIND THE ALLOWABLE BEARING STRESS F_p

According to AISC, ASD, page 4-6, knowing, the allowable bearing stress is

$F_p = 1.2F_u$. where $F_u = 64$ ksi for CR1018

$F_p = 1.2 \times 64$

$= 76.8$ ksi

According to ANSI/ASME B30.10-1993, Below the Hook Lifting Device, knowing:

$F_p = \frac{1}{3} F_y$ where $F_y = 54$ ksi for CR1018

$= \frac{1}{3} \times 54 = 18$ ksi —— governs

o FIND THE COMPUTED BEARING STRESS f_p.

$f_p = \frac{P}{A}$ where $P = 1620.5$ lb
$A = 1.23$ in^2

$f_p = \frac{1620.5}{1.23} = 1.317$ ksi

o FIND THE SAFETY FACTOR ON BEARING STRESS.

$f_p = 1.317$ ksi
$F_p = 18$ ksi

$SF = \frac{F_p}{f_p} = \frac{18}{1.317} = 13.7$

o FIND THE ALLOWABLE SHEAR STRESS F_v.

According to AISC, ASD, F4, page 5-49, knowing:
the allowable shear stress is

$F_v = 0.40\, F_y$ where $F_y = 54$ ksi for CR1018

$F_v = 0.40 \times 54$
$= 21.6$ ksi

According to ANSI/ASME, B30.20-1993, Below the Hook Lifting Device, knowing:

$F_v = \frac{1}{3} F_y$ where $F_y = 54$ ksi for CR1018

$= \frac{1}{3} \times 54 = 18$ ksi —— governs

O FIND THE COMPUTED SHEAR STRESS f_v.

$$f_v = \frac{V}{A} \quad \text{where } V = 632 \text{ lb}$$

$$A = \frac{1}{4}\pi d^2 \quad \text{where } d = 1 \text{ in}$$

$$= \frac{1}{4} \times \pi \times 1$$

$$= 0.785 \text{ in}^2$$

$$f_v = \frac{632}{0.785} = 0.805 \text{ ksi}$$

O FIND THE SAFETY FACTOR ON SHEAR STRESS.

$$f_v = 0.805 \text{ ksi}$$

$$F_v = 18 \text{ ksi}$$

$$SF = \frac{F_v}{f_v} = \frac{18}{0.805} = 22.36$$

O FIND THE PUNCH SHEAR f_v'

$$f_{v_1}' = \frac{V}{\pi d t} \quad \text{where } V = 1620.5 \text{ lb}$$

$$d = 1.25 \text{ in}$$

$$t = 0.5 \text{ in}$$

$$f_{v_1}' = \frac{1620.5}{\pi \times 1.25 \times 0.5}$$

$$= 0.825 \text{ ksi}$$

$$f_{v_2}' = \frac{V}{\pi d t} \quad \text{where } V = 1620.5 \text{ lb}$$

$$d = 1 \text{ in}$$

$$t = 0.5 - 0.375 = 0.125 \text{ in}$$

$$f_{v2}' = \frac{1620.5}{2 \times 1 \times 0.125} = 4.126 \text{ ksi} \quad \text{— governs}$$

O FIND THE SAFETY FACTOR ON PUNCH SHEAR

$F_v = 18 \text{ ksi}$

$f_v' = 4.126 \text{ ksi}$

$$SF = \frac{18}{4.126} = 4.4$$

In conclusion, the pin as sketched is adequate to carry the loads.

O Design the welds

According to AISC, ASD, TABLE J2.4, page 5-67, knowing the minimum size for fillet weld is 5/16".

O FIND THE TOLERANCE ON PIN.

— For $\phi 1.25$, LOOSE RUNNING FIT: H11/c11

From Table A-13, "Mechanical Engineering Design" Shigley page 745, knowing: the tolerance grade IT11 is 0.0063 in. (Δd)

For pin (shaft), From Table A-12, "Mechanical Engineering Design" Shigley, page 745, knowing:

The Fundamental Deviations is -0.0047 in (δ_F)

therefore, the pin dimensions:

$$d_{max} = \delta_F + d = -0.0047 + 1.25 = 1.2453 \text{ in}$$

$$d_{min} = d + \delta_F - \Delta d = 1.25 + (-0.0047) - 0.0063$$
$$= 1.239 \text{ in}$$

$$\boxed{1.2500^{-0.0047}_{-0.0110}} \rightarrow \boxed{1.250^{-0.005}_{-0.011}}$$

- For $\phi 1.0$, locational clearance fit H7/h6

From Table A-13, "Mechanical Engineering Design" Shigley, page 745, know: the tolerance grade IT6 for the shaft is $\Delta d = 0.0005$ in.

From Table A-12 "Mechanical Engineering Design" Shigley, page 745, know: the Fundamental Deviation is $\delta_F = 0$.

therefore, the pin dimensions

$$d_{max} = \delta_F + d = 0 + 1 = 1.000 \text{ in}$$

$$d_{min} = d + \delta_F - \Delta d = 1.000 + 0 - 0.0005 = 0.9995 \text{ in}$$

$$\boxed{1.0000^{+0}_{-0.0005}} \rightarrow \boxed{1.000^{+0}_{-0.001}}$$

[redacted]

Unbrako shoulder screws, UNBRAKO ALLOY STEEL

36 (2 1/4")

12705 – L – 1 1/2" – C – [redacted] – C $F_u = 160{,}000$ psi
$F_y = 140{,}000$ psi

From the catalog knowing, the ultimate tensile strength in lbs is 110 kips. and the double shear strength in lbs is 339 kips.

Apply torque to 1000 LBS-ft.

From the previous study, knowing: $F = 3241$ lb, $F_x = 632$ lb

0 FIND THE COMPUTED SHEAR STRESS f_v.

$f_v = \frac{V}{A}$ where $V = 632$ lb

$A = \frac{1}{4}\pi d^2$ where $d = 1.125$

$= \frac{1}{4} \times \pi \times 1.125^2$

$= 0.994$ in^2

$f_v = \frac{632}{0.994} = 0.636$ ksi

0 FIND THE ALLOWABLE SHEAR STRESS F_v.

According to AISC, ASD, Table J3.2, page 5-73, knowing: the allowable shear stress is

$F_v = 0.17 F_u$. where $F_u = 160$ ksi

$= 0.17 \times 160$

$= 27.2$ ksi — governs

Unbrako

LIMITED WARRANTY AND EXCLUSIVE REMEDY

SPS Technologies, Inc. through its Unbrako Division warrants that these products conform to industry standards specified herein and will be free from defects in materials and workmanship. THIS WARRANTY IS EXPRESSLY GIVEN IN LIEU OF ANY AND ALL OTHER EXPRESS OR IMPLIED WARRANTIES, INCLUDING ANY IMPLIED WARRANTY OF MERCHANTABILITY OR FITNESS FOR A PARTICULAR PURPOSE, AND IN LIEU OF ANY OTHER OBLIGATION ON THE PART OF SPS TECHNOLOGIES, INC. SPS Technologies, Inc. will, at its option, repair or replace free of charge (excluding all shipping and handling costs) any products which have not been subject to misuse, abuse, or modification and which in its sole determination were not manufactured in compliance with the warranty given above.

THE REMEDY PROVIDED FOR HEREIN SHALL BE THE EXCLUSIVE REMEDY FOR ANY BREACH OF WARRANTY OR ANY CLAIM ARISING IN ANY WAY OUT OF THE MANUFACTURE, SALE, OR USE OF THESE PRODUCTS. In no event shall SPS Technologies, Inc. be liable for consequential, incidental or any other damages of any nature whatsoever except those specifically provided herein for any breach of warranty or any claim arising in any way out of the manufacture, sale, or use of these products. No other person is authorized by SPS Technologies, Inc. to give any other warranty, written or oral, pertaining to the products.

INDUSTRIAL DISTRIBUTORS

Your UNBRAKO Distributor performs vital marketing functions in the distribution of industrial products.

The values and economies available to you through his many services include:

- **Large inventories to serve customers from local stocks**
- **Delivery service**
- **Product service**
- **Customer service**
- **Purchasing simplifications**

SPS TECHNOLOGIES

Unbrako Division

Unbrako

Highland Avenue
Jenkintown, PA 19046

215-572-3200
TWX: 510-665-1718
TELEX: 83-4254
FAX-800-CALL-SPS

3645 Oakcliff Road
Doraville (Atlanta), GA 30340

404-449-3621
FAX-404-441-3512

2701 South Harbor Boulevard
Santa Ana, CA 92702

213-924-0409
714-556-9020
TWX: 910-595-1133
TELEX: 67-8410
FAX-714-850-3666

2849 South 19th Avenue
Broadview, IL 60153

312-261-5245 (Chicago)
312-345-0135 (Broadview)
FAX-312-345-7159

Form 5207 25M 286 SPS Rev.

Printed in U.S.A.

Unbrako

SHOULDER SCREWS ▪ Dimensions ▪ Mechanical Properties ▪ Seating Torques

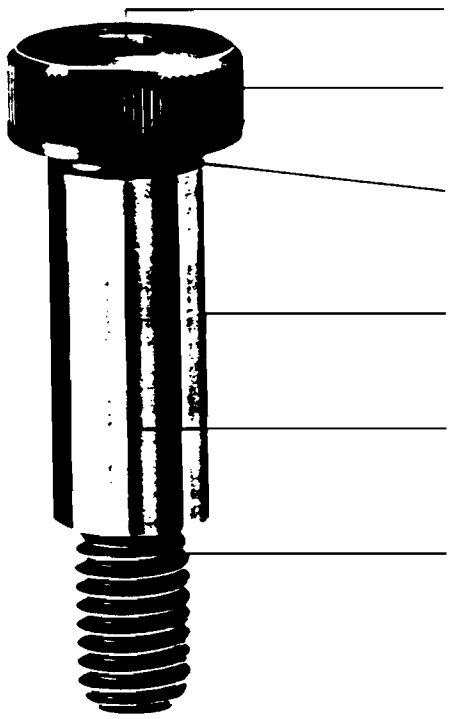

precision hex socket for maximum wrenching strength

knurled head for sure finger grip and fast assembly

neck to allow assembly with minimal chamfering

controlled concentricity between head and body for easier, more accurate assembly

shoulder diameter held to .001 inch tolerance up to 1-1/4" diameter. .002 inch tolerance over 1-1/4" diameter.

concentricity controlled between body and thread. Finished threads close to body for maximum holding power.

Threads per MIL-S-7742; ANSI B1.1; Handbook H-28.
MS Standards: MS 51975. ANSI B18.3. SS-100. MIL-S-21472
(See Note 2, page 2)

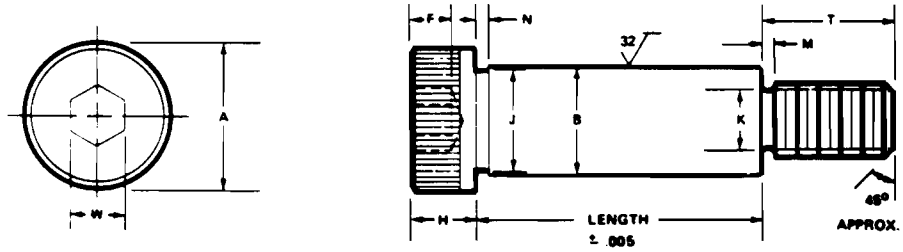

DIMENSIONS

Diameter		UNRC	max	min	max	min	min	max	min		max	min
1/4	.190	24	.375	.357	.248	.247	.094	.188	.182	.125	.227	.142	.133
5/16	.250	20	.438	.419	.3105	.3095	.117	.219	.213	.156	.289	.193	.182
3/8	.312	18	.562	.543	.373	.372	.141	.250	.244	.187	.352	.249	.237
1/2	.375	16	.750	.729	.498	.497	.188	.313	.306	.250	.477	.304	.291
5/8	.500	13	.875	.853	.623	.622	.234	.375	.368	.312	.602	.414	.397
3/4	.625	11	1.000	.977	.748	.747	.281	.500	.492	.375	.727	.521	.502
7/8	.750	10	1.125	1.100	.873	.872	.375	.625	.616	.500	.852	.638	.616
1	.750	10	1.312	1.287	.998	.997	.375	.625	.616	.500	.977	.638	.616
1-1/4	.875	9	1.750	1.723	1.248	1.247	.469	.750	.741	.625	1.227	.750	.726
1-1/2	1.125	7	2.125	2.095	1.498	1.496	.656	1.000	.980	.875	1.478	.964	.934
1-3/4	1.250	7	2.375	2.345	1.748	1.746	.750	1.125	1.105	1.000	1.728	1.089	1.059
2	1.500	6	2.750	2.720	1.998	1.996	.937	1.250	1.230	1.250	1.978	1.307	1.277

Dimensions in inches. NOTE: Performance data listed are for standard production items only. May vary due to variables in methods of manufacture. Please consult Unbrako for assistance on any non-standard performance or application.

SHOULDER SCREWS

Dimensions ▪ Mechanical Properties ▪ Seating Torques

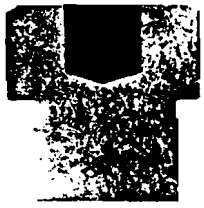

socket

Uniform depth and size assure strength, accurate key fit, and application of higher tightening torques.

squareness of shoulder

Held to close tolerances to provide more accurate seating.

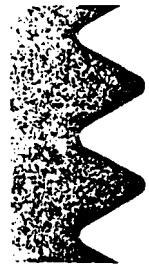

fully formed threads

finished close to shoulder and improved root radius.

APPLICATIONS

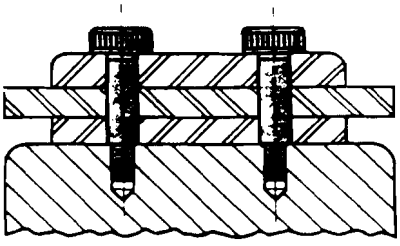

stationary guide

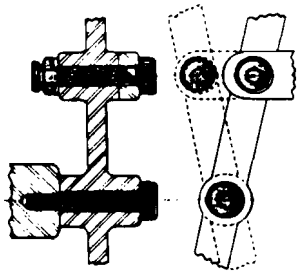

moving shaft or pivot

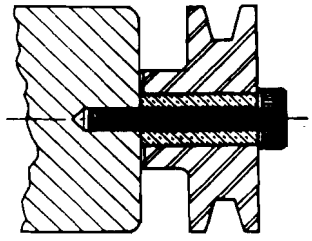

pulley shaft uses

PART NUMBERING

shoulder screw	LOC-WEL	5/16"	coarse	4"	cadmium plate
12705	L	–5	C	–64	C

The part number consists of (1) a basic part number describing the item and a letter denoting optional features; (2) a dash number and letter designating diameter and thread series; (3) a dash number and letter designating length and finish.

FINISH

B – Chemical Black Oxide
C – Cadmium Plate – P2
D – Cadmium Plate – P4
U – Zinc Plate – P6
Z – Zinc Plate – P8

No letter indicates standard ground body finish. (Thermol Oxide on threads and head) *See page 69 for plating specifications.

LENGTH in 16ths

THREAD TYPE C-coarse

DIAMETER (Shoulder)

DIA.	1/4	5/16	3/8	1/2	5/8	3/4	7/8	1	1 1/4	1 1/2	1 3/4	2
DASH NO.	4	5	6	8	10	12	14	16	20	24	28	32

OPTIONAL FEATURES

Self-locking
E – LOC-WEL to Mil-F-18240
L – LOC-WEL (Commercial)
P – Nylon Plug
TF – TRU-FLEX

BASIC PART NUMBER 12705

MECHANICAL PROPERTIES AND SEATING TORQUES

.093	.083	.375	2,220	9,420	45	25	17/64	1/4
.093	.100	.437	4,160	14,720	112	#7	21/64	5/16
.093	.111	.500	7,060	21,200	230	F	25/64	3/8
.093	.125	.625	10,640	37,700	388	5/16	33/64	1/2
.093	.154	.750	19,810	58,900	990	27/64	41/64	5/8
.093	.182	.875	31,670	84,820	1,975	35/64	49/64	3/4
.093	.200	1.000	47,680	115,500	3,490	21/32	57/64	7/8
.125	.200	1.000	47,680	150,800	3,490	21/32	1-1/64	1
.125	.222	1.125	66,230	235,600	5,610	49/64	1-9/32	1-1/4
.5	.286	1.500	110,000	339,000	12,000	25 mm	1-19/32	1-1/2
.5	.286	1.750	141,000	462,000	16,000	1-7/64	1-25/32	1-3/4
.125	.333	2.000	205,000	603,000	30,000	34 mm	2-1/32	2

NOTES

Material: UNBRAKO alloy steel.

Heat treatment: Rockwell C 36-43; 160,000 psi tensile strength.

Concentricity: Head to body – within .005 T.I.R. when checked in "V" block equal to or longer than body length. Pitch diameter to body – within .004 T.I.R. when held in threaded bushing and checked at a distance of 3/16" from shoulder at threaded end.

Shoulder must rest against face of shoulder of standard "GO" ring gage. Bearing surface of head – perpendicular to axis of body within 2° maximum deviation.

Tensile strength based on minimum neck area "K". Shear strength based on shoulder diameter "B".

Thread class: 3A

Screw point chamfer: The point shall be flat or slightly concave, and chamfered. The plane of the point shall be approximately normal to the axis of the screw. The chamfer shall extend slightly below the root of the thread, and the edge between flat and chamfer may be slightly rounded. The included angle of the point should be approximately 90°.

According to ANSI/ASME B30.20-1993, Below the Hook Lifting Device, having.

$$F_v = \frac{1}{3} F_y \quad \text{where} \quad F_y = 120{,}000 \text{ psi}$$

$$= \frac{1}{3} \times 120000$$

$$= 40 \text{ ksi}$$

- FIND THE SAFETY FACTOR ON THE SHEAR STRESS

$$F_v = 27.2 \text{ ksi}$$

$$f_v = 0.636 \text{ ksi}$$

$$SF = \frac{27.2}{0.636} = 42.8$$

- FIND THE COMPUTED TENSILE STRESS f_t

$$f_t = \frac{F}{A} \quad \text{where} \quad F = 1620.5 \text{ lb}, \quad A = 0.994 \text{ in}^2$$

$$f_t = \frac{1620.5}{0.994} = 1.630 \text{ ksi}$$

- FIND THE ALLOWABLE TENSILE STRESS F_t.

According to AISC, ASD, TABLE J3.3, page 5-74, having the allowable tensile stress is permitted as following

$$0.43 F_u - 1.8 f_v \leq 0.33 F_u .$$

where $F_u = 160 \text{ ksi}$

$f_v = 0.636 \text{ ksi}$

$0.43F_u - 1.8f_v = 0.43 \times 160 - 1.8 \times 0.636 = 67.65$ ksi

$0.33F_u = 0.33 \times 160 = 52.8$ ksi — governs

According to ANSI/ASME B30.20-1993 Below the Hook Lifting Device, knowing

$F_t = \frac{1}{3}F_y$ where $F_y = 120$ ksi.

$F_t = \frac{1}{3} \times 120 = 40$ ksi — controls

○ FIND THE SAFETY FACTOR ON TENSILE STRESS

$F_t = 40$ ksi

$f_t = 1.630$ ksi

$SF = \frac{40}{1.630} = 24.5.$

therefore, the shoulder screw is adequate to carry the load requirement.

○ FIND THE CLAMPING FORCE ON THE SCREW

The recommended seating torque is 12000 lb-in.

knowing $T = 0.195dW \rightarrow$ where $T = 12000$ lb-in, $d = 1.5$ in

$W = \frac{12000}{1.5 \times 0.195} = 41025$ lb. $\gg 3241$ lb

$SF = \frac{41025}{3241} = 12.6$ Torque needs to be reduced.

O FIND THE DESIRED CLAMPING FORCE / TORQUE

— find the max deflection on the clamping plate.

From the previous study, knowing the maximum deflection is $\frac{l}{180}$ where $l = 8$ in

$$\Delta = \frac{l}{180} = \frac{8}{180} = 0.044 \text{ in}$$

According to AISC, ASD, Beam diagrams and formulas on page 2-298, for simple beam, concentrated load at center, the Δmax at point of load is

$$\Delta max = \frac{P l^3}{48 E I}$$

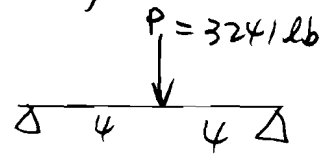

Knowing: $\Delta max = 0.044$ in

$E = 29 \times 10^6$

$I = \frac{bd^3}{12} = \frac{2.4375 \times 0.75^3}{12} = 0.0856 \text{ in}^4$

$l = 8$ in

$$P = \frac{48 E I \times \Delta max}{l^3}$$

$$= \frac{48 \times 29 \times 10^6 \times 0.0856 \times 0.044}{8^3}$$

$$= 10251 \text{ lb} \gg P = 3241 \text{ lb}$$

$$SF = \frac{10251}{3241} = 3.2$$

– find the max. deflection on the plate B

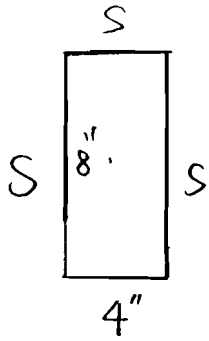

According to Roark's Formulas for stress & strain, page 460, knowing, Rectangular plate, three edges simply supported, one edge free, uniform load over entire plate, the maximum deflection is

$$Y = \frac{\alpha q b^4}{E t^3}$$

where $q = \frac{10251 \text{ lb}}{32 \text{ in}^2} = 320.343 \text{ lb/in}^2$

$\alpha = 0.058$

$b = 4$

$E = 29 \times 10^6$

$t = 0.5 \text{ in}$

$$Y = \frac{0.058 \times 320.343 \times 4^4}{29 \times 10^6 \times 0.5^3}$$

$$= 0.0013 \text{ in}$$

$$\Delta y = \frac{l}{180} = \frac{8}{180} = 0.044 \text{ in}$$

$Y < \Delta y$ $\quad SF = \frac{0.044}{0.0013} = 338$

In conclusion, the proposed design in sketch is adequate.

According to "Design of Machine Elements" Chapter 5, page 276, known:

$$T = 0.195\, dW$$

where d = nominal diameter of the bolt

$= 0.934$ in

$W = 10251$ lb

$$T = 0.195 \times 0.934 \times 10251$$

$= 1885$ lb-in

$= 157.08$ lb-ft

Since the actual clamping force is 3241 lb; a lot less than the calculated clamping force, use 150 lb-ft torque.

Due to long lead time and high cost of the unbrako alloy shoulder bolt, revise the damping device design as follows:

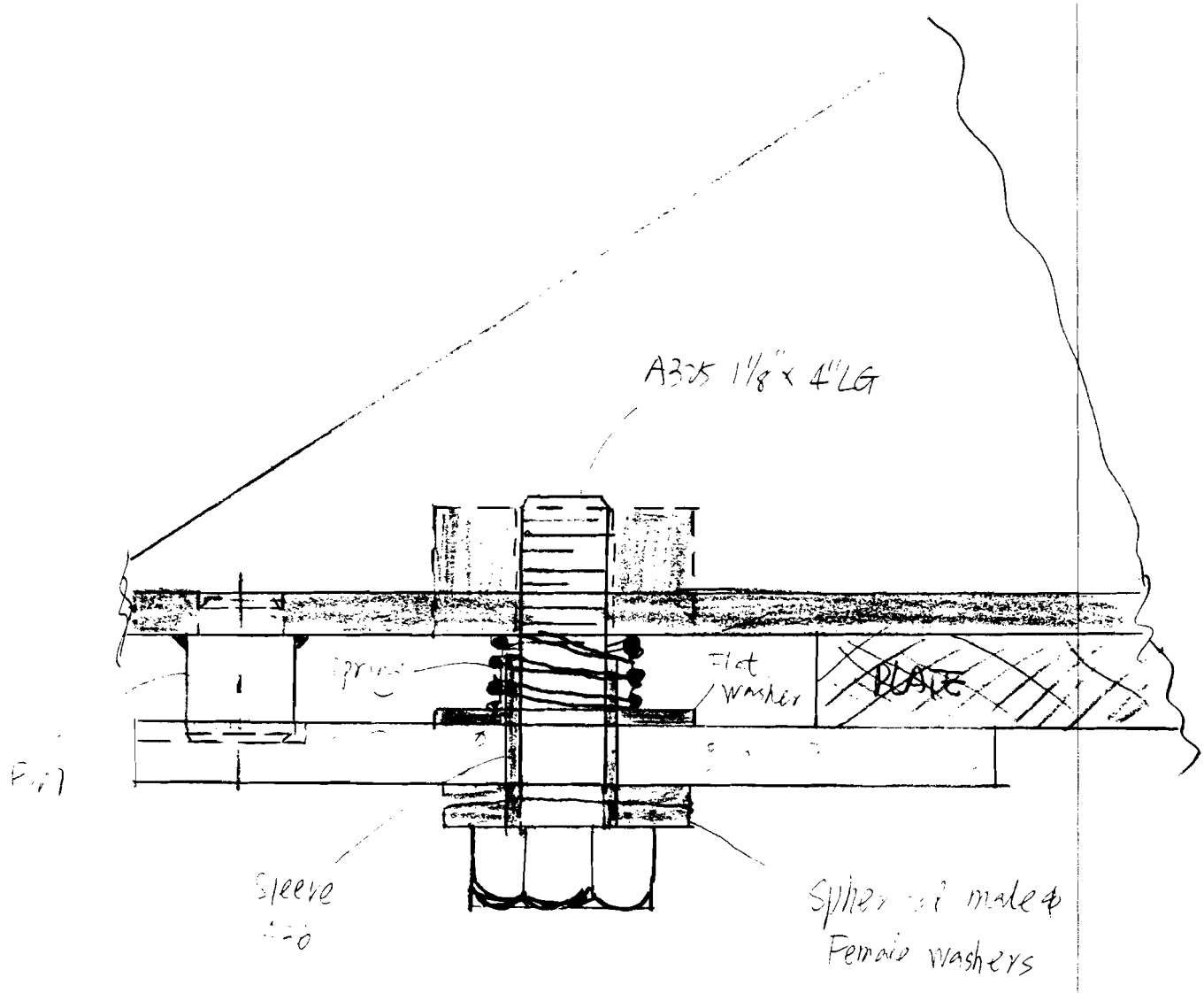

— Design the Bolt:

○ FIND THE COMPUTED SHEAR STRESS f_v.

$f_v = \frac{V}{A}$ where $V = 632$ lb

$A = 0.994$ in^2 (AISC, ASD 4-3, page TABLE 1-A)

$f_v = \frac{632}{0.994} = 0.636$ ksi

○ FIND THE ALLOWABLE SHEAR STRESS F_v.

According to AISC, ASD, Table J3.2, page 5-73. knowing the allowable shear stress is

$F_v = 21$ ksi. — governs

According to ANSI/ASME B30.20-1993, Below the Hook Lifting Device, knowing

$F_v = \frac{1}{3} F_y$ where $F_y = 81$ ksi for A325 1 1/8" dia Bolt

$= \frac{1}{3} \times 81$

$= 27$ ksi

○ FIND THE SAFETY FACTOR ON THE SHEAR STRESS

$F_v = 21$ ksi

$f_v = 0.636$ ksi

$SF = \frac{21}{0.636} = 33$

O FIND THE COMPUTED TENSILE STRESS f_t

$f_t = \frac{F}{A}$ where $F = 1620.5$ lb

$A = 0.994$ in^2

$f_t = \frac{1620.5}{0.994} = 1.630$ ksi

O FIND THE ALLOWABLE TENSILE STRESS F_t

According to AISC, ASD, TABLE J3.3, page 5-74, knowing the allowable tensile stress for A325 Bolt is

$\sqrt{(44)^2 - 4.39 f_v^2} = \sqrt{(44^2) - 4.39 \times 0.636^2}$

$= 43.97$ ksi

According to ANSI/ASME B30.20-1993 Below the Hook Lifting Device, knowing:

$F_t = \frac{1}{3} F_y$ where $F_y = 81$ ksi for A325 1⅛" Bolt

$F_t = \frac{1}{3} \times 81 = 27$ ksi — governs

O FIND THE SAFETY FACTOR ON TENSILE STRESS

$F_t = 27$ ksi

$f_t = 1.630$ ksi

$SF = \frac{27}{1.630} = 16.6$

6 FIND THE BOLT LENGTH

$L = 0.75'' + 0.5'' + 1.19'' + 1.5''$

$= 3.94$ in

↳ use 4" long

1⅛"-7 UNC - 4" x (2) ea

— DESIGN THE SLEEVE.

knowing the plate thickness varies from 1.19" to 0.99".

the plates (clamping & bank plate) deflections are

$0.044'' + 0.0013'' = 0.045''$.

$L_{SLEEVE} = 0.99'' + 0.75'' + 0.5'' - 0.045''$

$= 2.195''$.

↳ use 2"

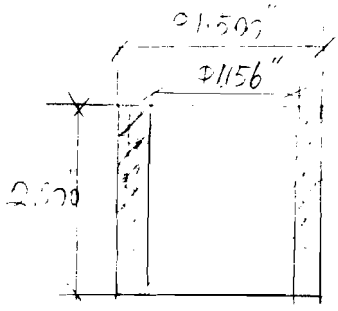

Material: A36

Φ1½ Round Bar

- FIND THE BEARING STRESS ON THE CLAMPING PLATE

$$f_p = \frac{F}{A} \quad \text{Where } F = \frac{1}{2} f_{clamping}$$
$$= \frac{1}{2} \times 10251$$
$$= 5125.5 \text{ lb}$$

$$A = \frac{1}{4}\pi d^2$$
$$= \frac{1}{4}\pi (1.125 - 2\times 0.09)^2$$
$$= 0.701 \text{ in}$$

$$f_p = \frac{5125.5}{0.701} = 7.307 \text{ ksi}$$

- FIND THE ALLOWABLE BEARING STRESS ON THE CLAMPING PLATE

According to AISC, ASD, J8, page 5-79, knowing the allowable bearing stress is

$$F_p = 0.90 F_y \quad \text{where } F_y = 36 \text{ ksi for A36}$$
$$= 0.90 \times 36$$
$$= 32.4 \text{ ksi}$$

According to ANSI/ASME B30.20-1993, Below the Hook Lifting Device, knowing

$$F_p = \frac{1}{3} F_y \quad \text{where } F_y = 36 \text{ ksi for A36}$$
$$= \frac{1}{3} \times 36$$
$$= 12 \text{ ksi} \text{ — governs}$$

- FIND THE SAFETY FACTOR ON BEARING STRESS

$f_p = 7.307$ ksi

$F_p = 12$ ksi

$$SF = \frac{12}{7.307} = 1.64$$

- FIND THE COMPUTED PUNCHING SHEAR STRESS ON THE CLAMPING PLATE.

$$f_{punching} = \frac{V}{A} \qquad \text{where } V = 5125.5 \text{ lb}$$

$$A = \pi d t$$
$$= \pi \times (1.125 - 2 \times 0.09) \times 0.5$$
$$= 1.48 \text{ in}^2$$

$$f_{punching} = \frac{5125.5}{1.48} = 3.452 \text{ ksi}$$

- FIND THE ALLOWABLE PUNCHING SHEAR STRESS ON THE CLAMPING PLATE.

According to AISC, ASD, F4, page 5-49, knowing the allowable shear stress is

$$F_v = 0.40 F_y \qquad \text{where } F_y = 36 \text{ ksi for A36}$$
$$= 0.40 \times 36$$
$$= 14.4 \text{ ksi}$$

According to ANSI/ASME B30.20-1993, below the Hook Lifting Device, knowing.

$F_v = \frac{1}{3} F_y$ where $F_y = 36$ ksi for A36

$= \frac{1}{3} \times 36$

$= 12$ ksi — governs

— FIND THE SAFETY FACTOR ON THE PUNCHING SHEAR STRESS

$f_{punching} = 3.452$ ksi

$F_v = 12$ ksi

$SF = \frac{12}{3.452} = 3.47$

In conclusion, the design shown above is adequent to carry the loads.

[redacted]

Case-hardened steel combined sets — 2 (ea)

1½" ID: 1 9/16" O.D 2 7/8", THK: ½"

McMaster-CARR 91131A124 $13.98/ea

[redacted]

plain steel flat washer (2 required)

1½" ID: 1 9/16" O.D 3" THK: 5/32"

McMaster-CARR 90126A042 $2.29/pkg

[redacted] the Spring

The clamping plate weight:

$$W = 10 \times 1.0 \times 4.0 \times 490 / 1728 = 11.3 \text{ lb}$$

$$f_r = f_0 N = 0.39 \times 11.3 = 4.4 \text{ lb}$$

Therefore, the spring load needs to be greater than 4.4 lb.

Use CENTURY SPRING, CATALOG NUMBER 3301.

O.D — 1.750"
I.D — 1.566"
L_{free} — 2.00"
load — 11 lbs/in
L_{solid} — 0.46"
ENDS — closed

The safety Factor on spring:

$$SF = \frac{11}{4.4} = 2.5$$

In conclusion, design as shown is accurate to carry the loads.

free CATALOG ON

See inside back cover for info.

Century®

SPRING CORPORATION

Since 1927

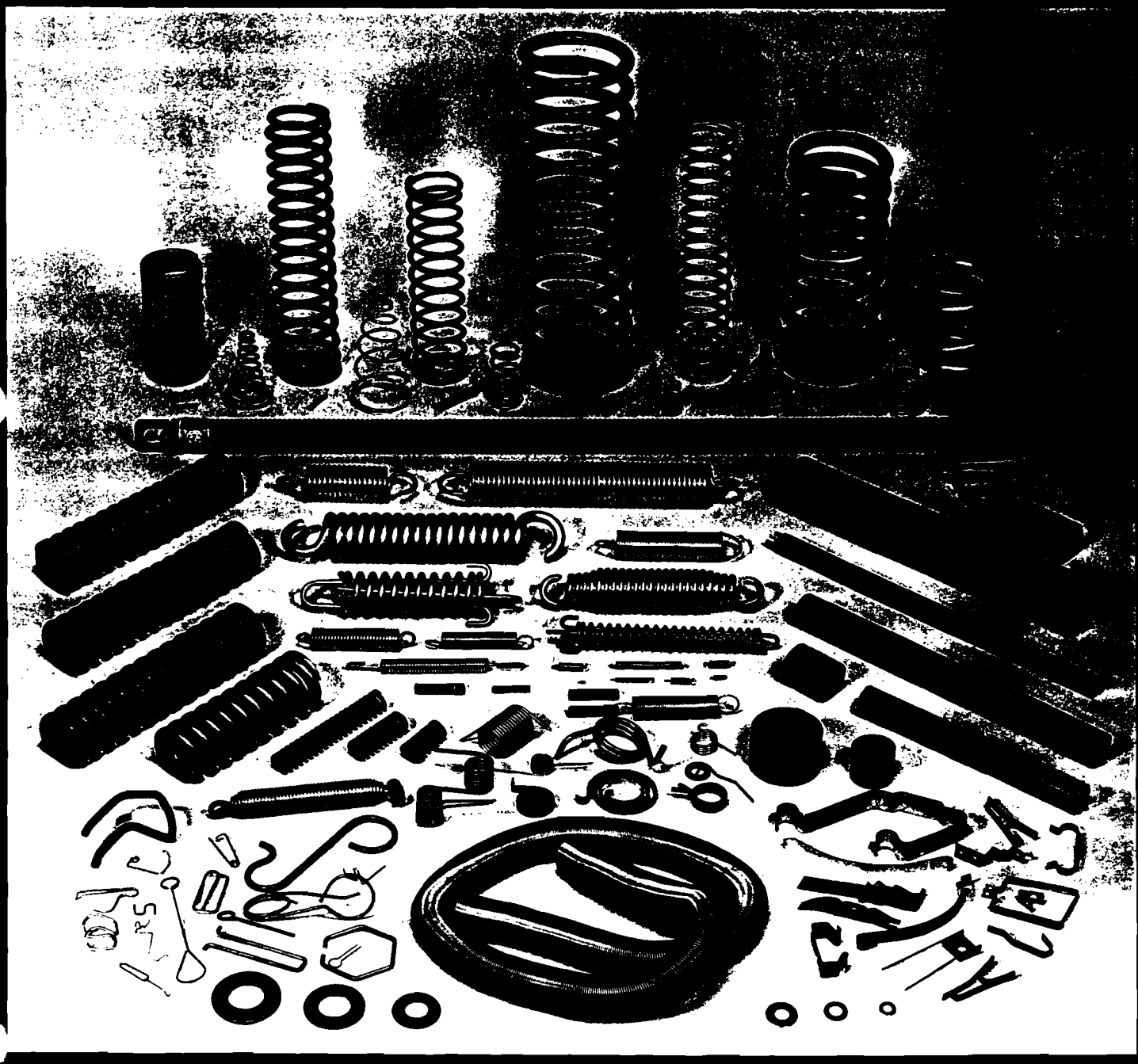

Stock Spring Parts Catalog

ENGINEERING • EDUCATION • TRANSPORTATION • AGRICULTURE • HARDWARE • CONSTRUCTION • AEROSPACE • ELECTRONIC • MARINE • MANUFACTURING • MINING • PETROLEUM • MACHINERY • RESEARCH & DEVELOPMENT • OPTICAL • MEDICAL • CONSUMER • GOVERNMENT • SPORTING EQUIPMENT • RECREATION VEHICLES •

CSC®

Since 1927

CENTURY SPRING CORPORATION

P.O. Box 15287
222 East 16th Street
Los Angeles
California 90015

Phone 213 749•1466 Toll Free 800 237•5225 Fax 213 749•3802

COMPRESSION SPRINGS

Century Spring warehouses the largest inventory of high-grade, straight, cylindrically-shaped compression springs in the world. All the springs found in this section of the catalog are fabricated from round wire. The energy storage capacity is greater for round-wire compression springs than for rectangular-wire compression springs. Rectangular wire is sometimes employed to reduce the solid (totally compressed) height or increase the space efficiency of the design. ***Century Spring's*** die springs are made from rectangular wire for this reason. (See the "Die Spring" section of this catalog.)

Selecting a Compression Spring:

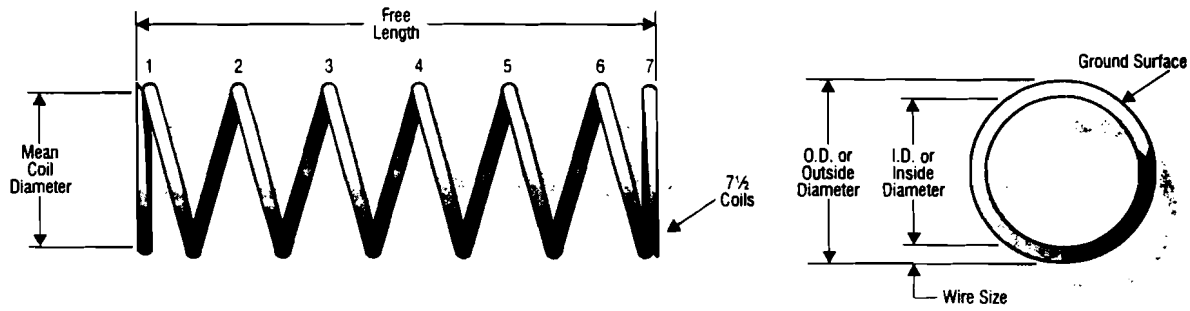

Turn to the inventory page with the desired outside diameter (O.D.). Outside diameters increase as page numbers increase and are found in the left column of the page.

- Next, find the length or rate (strength) you require. These, too, are normally in increasing order.

  Spring rate is the load (pounds) it takes to deflect (compress) the spring one theoretical inch, i.e., if the rate = 40 Lbs./In., it would take 10 pounds to deflect it 1/4 inch, or 80 pounds for 2 inches, etc..

- If the length or rate is not known but the installed working length (W.L.) is, then select a spring — say 30% longer — than the W.L..

  You must know the load at the W.L.. Just subtract the W.L. from the spring's selected free length and multiply by its rate to obtain the load to compare with your required value.

- If the load required is not obtained, select a new candidate with either an increase or decrease in rate (strength) or free length.

- Be certain that the tabulated solid length (completely compressed) for your candidate spring indicates enough room for deflection and, also, that the deflection is not significantly greater than the tabulated "Maximum Suggested" for stress reasons.

Note: If the spring needed for your application cannot be found in our catalog inventory, we can fabricate it for you. Often, there is no cost increase for this service as we have low quantity requirements.

Design Information

The basic compression rate and wire stress for a compression spring can be estimated with the following:

$$R = \frac{Gd^4}{8nD^3} \quad \text{and} \quad R = \frac{P}{\Delta}$$

$$S = \frac{8PDK}{\pi d^3} \quad \text{or} \quad S = \frac{8RDK\Delta}{\pi d^3}$$

Note: One should not employ the curvature (k) correction stress in an expression solving for deflection. Use the uncorrected stress only or errors will occur. The uncorrected stress can be used for static applications.

Large wire and bar stock sizes also require an empirically-derived reduction in the standard rate calculation of up to 9%. For these reasons, refinements in large spring design should be left to the experienced spring designer.

Where:
- **D** = Mean diameter, (O.D. - d) inches
- **d** = Wire diameter, inches
- **G** = Modulus (spring Steel = 11.5×10^6, stainless = 10×10^6), p.s.i.
- **K** = Stress correction factor (see plot)
- **N** = Number of total coils
- **n** = Number of active coils (see table)
- **P** = Applied load, pounds
- **R** = Spring rate, pounds per inch (Lbs./In.)
- **S** = Wire stress, psi
- Δ = Deflection, inches
- π = 3.14

SPRING CHARACTERISTICS	TYPE OF ENDS			
	OPEN	OPEN & GROUND	CLOSED	CLOSED & GROUND
SOLID LENGTH	d(N+1)	d x N	d(N+1)	d x N
ACTIVE COILS (n)	N	N - 1	N - 2	N - 2
TOTAL COILS (N)	n	N	n + 2	n + 2
FREE LENGTH (L)	(p x N) + d	p x N	(p x n) + 3d	(p x n) + 2d

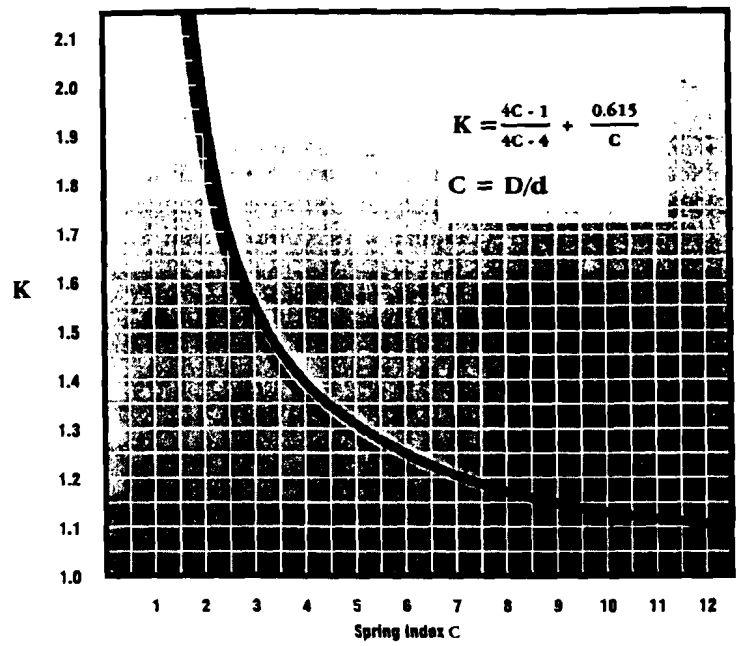

WAHL CURVATURE STRESS CORRECTION

The suggested maximum allowable spring-wire stress values can be derived from the "Minimum Tensile Strength" (MTS) tables found in the "Material Properties" section of this catalog. The MTS values vary with the spring-wire diameter. Further, 30 to 45 percent of the MTS value, depending on the material type, is used as a corrected stress target to produce a long fatigue life. The table, "Properties of Common Spring Materials", found also in the "Material Properties" section of this catalog, indicates the appropriate percentage value of the MTS to use for a given spring material.

If you have any doubts about your calculated stress for a selected Century stock spring, call and speak to any of **Century Spring's** ***Order Department*** personnel for a rapid computer confirmation. For free custom spring designs, call or fax our ***Custom Spring Department***. For quick stress checks on custom spring designs or technical information, call or fax our ***Engineering Department***.

Spring Characteristics

Service Life

It should be noted that if critical force-versus-deflection linearity is required, only the center 60 to 80 percent of the available deflection range should be employed. Thus, reserve at least the first and last 15 to 20 percent of the range for potential spring-end and adjacent coil-contact effects. These effects can be largely ignored for the majority of spring applications.

The column "Suggested Maximum Deflection" found in the following pages of inventory reflects the recommended inches of travel to obtain a statistical service-life of from 100,000 to 1,000,000 cycles (deflections) with infrequent breakage. This can be realized if the spring in question is not subjected to shock loads, rapid cycling, temperature extremes, corrosion or stress values above those previously recommended. If the spring is statically loaded (not cycling), a near-infinite life can be expected. Extended spring service-life can be expected by applying recommendations found in the "Material Properties" section of this catalog.

Materials

The highest grades of spring wire are used for fabricating our springs. To create cost-effective warehousing of our stock spring inventory for our customers, we offer material certification for custom and die springs only. Certifications of conformance for geometric tolerances set by the Spring Manufacturers Institute (SMI) are available for our stock springs upon request. See the "Custom Spring" section of this catalog if material trace certifications or unique materials are required.

Materials *(Continued.)*

"Spring Steel" is a stock inventory term covering:

Music wire
Hard-drawn (MB) wire
Oil-tempered wire

Additionally, stock compression-spring materials include:

Stainless Steel (300 series)
Beryllium Copper
Phosphor Bronze

Tolerances

Century Spring manufactures stock springs to commercial tolerances defined by the SMI. Calculated rates and loads based on the SMI geometric tolerances have an approximate +/- ten percent. Low or high-index springs will have higher values. Call us if tighter tolerance values are required.

Regarding angle tolerance, the plane of the ground end of a spring is usually within three degrees of the perpendicular-to-the-body axis of the spring.

Direction of Helix *(wind)*

The wind direction of our stock springs varies. Call us if the helix direction is important.

Ends

The compression-spring ends configuration is indicated in the "Ends" column of our inventory listings which are:

Closed - The last coil at each end is bent back to touch the previous coil to create a flat base.
Closed and Ground (C&G) - The closed ends of a spring ground to a more accurate flat base. This will also reduce the solid length.
Open - The spring end coils remain open, maintaining the spring machine's helical wind shape.

Finish

The finishes available for our compression springs are as indicated in the "Finish" column of our inventory listing which include:

Zinc
Gold Irridite
Black Oxide
Tinned
Passivated (Upon request)
None (can be plated upon request)

COMPRESSION SPRINGS

O.D. Inches	O.D. mm	CENTURY STOCK NUMBER	FREE LENGTH Inches	FREE LENGTH mm	I.D. Inches	I.D. mm	RATE Lbs./in.	RATE N/mm	SUGG.MAX.DEFL. Inches	SUGG.MAX.DEFL. mm	SUGG.MAX.LOAD Lbs.	SUGG.MAX.LOAD N	SOLID LENGTH Inches	SOLID LENGTH mm	WIRE DIA. Inches	WIRE DIA. mm	TOTAL COILS	MAT'L	ENDS	FINISH
.703	43.26	11835	1.75	44.5	1.547	39.3	4.0	.70	1.4	35	5.5	25	.37	9.4	0.078	2.0	4.75	SST	CG	N
.703	43.26	11842	1.84	46.8	1.593	40.5	1.2	.20	1.6	39	1.8	8.0	.29	7.3	0.055	1.4	4.25	SST	C	N
.703	43.26	S-3034	4.00	101.6	1.467	37.3	7.2	1.3	2.8	70	20	88	1.24	31.5	0.118	3.0	10.5	SST	CG	N
.703	43.26	S-3109	4.38	111.1	1.453	36.9	9.7	1.7	3.1	79	30	135	1.25	31.8	0.125	3.2	10.0	SST	CG	N
.703	43.26	S-956	4.38	111.1	1.433	36.4	13	2.4	3.0	76	40	180	1.35	34.3	0.135	3.4	10.0	SST	CG	N
1.703	43.26	1639	7.00	177.8	1.407	35.7	15	2.7	3.9	98	59	263	2.22	56.4	0.148	3.8	14.0	SPR	C	Z
1.703	43.26	11925	9.25	235.0	1.363	34.6	13	2.3	4.7	118	62	276	4.59	116.6	0.170	4.3	27.0	SPR	CG	GI
1.703	43.26	10259	10.3	260.4	1.217	30.9	83	14	2.7	70	227	1009	5.23	132.7	0.243	6.2	21.5	SPR	CG	Z
1.703	43.26	12459	20.0	508.0	1.493	37.9	1.1	.19	16	401	17	77	4.23	107.3	0.105	2.7	39.3	SPR	O	N
1.718	43.64	S-1481	1.31	33.3	1.574	40.0	3.8	.66	.95	24	3.6	16	.36	9.1	0.072	1.8	4.00	SST	C	N
1.718	43.64	4315	3.50	88.9	1.344	34.1	75	13	1.4	37	109	483	1.59	40.4	0.187	4.7	8.50	SPR	CG	Z
1.718	43.64	S-1507	5.00	127.0	1.594	40.5	.71	.12	4.5	115	3.2	14	.48	12.2	0.062	1.6	7.75	SST	CG	N
1.718	43.64	3934	5.00	127.0	1.558	39.6	1.7	.29	4.1	105	6.9	31	.88	22.4	0.080	2.0	10.0	SPR	C	Z
1.718	43.64	2525	5.00	127.0	1.548	39.3	2.2	.38	4.1	103	8.8	39	.94	23.7	0.085	2.2	10.0	SPR	C	Z
1.718	43.64	4337	5.50	139.7	1.094	27.8	577	101	.75	19	435	1934	3.28	83.2	0.312	7.9	10.5	SPR	CG	Z
1.718	43.64	S-1622	6.13	155.6	1.518	38.6	3.6	.63	5.0	127	18	80	1.03	26.2	0.100	2.5	10.3	SST	CG	N
1.718	43.64	238	7.00	177.8	1.422	36.1	15	2.7	3.9	98	59	260	2.04	51.7	0.148	3.8	13.8	SPR	CG	Z
1.718	43.64	3176	8.75	222.3	1.500	38.1	4.2	.74	5.9	151	25	112	1.47	37.4	0.109	2.8	13.0	SPR	CG	Z
1.734	44.04	12130	1.56	39.7	1.284	32.6	460	81	.39	9.8	178	793	.97	24.7	0.225	5.7	4.33	SPR	CG	Z
1.734	44.04	1669	2.00	50.8	1.324	33.6	178	31	.77	20	137	608	1.23	31.2	0.205	5.2	6.00	SPR	CG	Z
1.734	44.04	S-3044	2.25	57.2	1.464	37.2	25	4.4	1.4	37	37	163	.81	20.6	0.135	3.4	6.00	SST	CG	N
1.734	44.04	11285	2.38	60.3	1.552	39.4	4.6	.81	1.7	44	8.0	35	.66	16.8	0.091	2.3	8.25	SST	C	N
1.734	44.04	10361	2.50	63.5	1.284	32.6	238	42	.78	19	178	793	1.46	37.2	0.225	5.7	6.50	SPR	CG	Z
1.734	44.04	1595	3.38	85.7	1.010	25.7	1821	319	.40	10	722	3209	2.63	66.7	0.362	9.2	7.25	OT	CG	Z
1.734	44.04	S-382	3.44	87.3	1.576	40.0	2.1	.38	2.8	71	6.0	27	.63	16.1	0.079	2.0	7.00	SST	C	N
1.734	44.04	4191	3.75	95.3	1.414	35.9	30	5.3	2.2	55	65	289	1.60	40.6	0.160	4.1	10.0	SPR	CG	GI
1.734	44.04	11793	5.47	138.9	1.094	27.8	627	110	.74	19	464	2062	3.84	97.5	0.320	8.1	10.5	SPR	CG	Z
1.734	44.04	12550	5.47	138.9	1.110	28.2	474	83	.91	23	431	1918	3.74	95.1	0.312	7.9	12.0	SPR	CG	Z
1.734	44.04	12681	5.50	139.7	1.072	27.2	625	109	.82	21	510	2269	3.97	100.9	0.331	8.4	12.0	SPR	CG	Z
1.734	44.04	S-967	6.38	161.9	1.574	40.0	1.3	.22	5.5	140	6.9	31	.88	22.4	0.080	2.0	11.0	SST	CG	N
1.734	44.04	1946	7.25	184.2	1.484	37.7	8.7	1.5	4.2	106	36	161	1.48	37.0	0.125	3.2	11.7	SPR	CG	Z
1.734	44.04	12106	7.81	198.4	1.588	40.3	.91	.16	6.9	175	6.3	28	.93	23.6	0.073	1.9	11.8	SPR	C	Z
1.750	44.45	S-273	.84	21.4	1.396	35.5	214	38	.22	5.7	48	213	.62	15.7	0.177	4.5	3.50	SST	CG	N
1.750	44.45	S-41	1.00	25.4	1.396	35.5	315	55	.27	6.8	84	376	.53	13.5	0.177	4.5	2.00	SST	CG	N
1.750	44.45	3331	1.44	36.5	1.184	30.1	1460	256	.23	5.8	333	1480	1.13	28.8	0.283	7.2	4.00	SPR	CG	Z
1.750	44.45	1799	1.50	38.1	1.454	36.9	56	9.8	.76	19	42	189	.74	18.8	0.148	3.8	5.00	HD	CG	Z
1.750	44.45	1633	1.50	38.1	1.396	35.5	121	21	.62	16	74	331	.89	22.5	0.177	4.5	5.00	HD	CG	N
1.750	44.45	1919	1.63	41.3	1.454	36.9	96	17	.60	15	58	256	.70	17.9	0.148	3.8	3.75	SPR	C	Z
.750	44.45	11600	1.75	44.5	1.396	35.5	121	21	.69	17	83	370	1.06	27.0	0.177	4.5	5.00	SPR	CG	Z
.750	44.45	3301	2.00	50.8	1.566	39.8	11	2.0	1.3	34	15	66	.46	11.7	0.092	2.3	4.00	SPR	C	Z
1.750	44.45	12458	2.31	58.7	1.516	38.5	9.1	1.6	1.3	32	12	51	1.05	26.7	0.117	3.0	[illegible]	[illegible]	C	N
1.750	44.45	10641	2.38	60.3	1.460	37.1	35	6.2	1.4	35	49	217	.85	21.6	0.145	3.7	[illegible]	[illegible]	CG	N
1.750	44.45	10653	2.56	65.1	1.300	33.0	231	40	.77	19	177	787	1.46	37.2	0.225	5.7	[illegible]	[illegible]	CG	Z
1.750	44.45	S-1663	2.66	67.5	1.396	35.5	80	14	1.1	27	84	376	1.06	27.0	0.177	4.5	6.00	[illegible]	CG	N
1.750	44.45	11499	3.00	76.2	1.426	36.2	35	6.2	1.4	35	49	217	1.62	41.1	0.162	4.1	[illegible]	[illegible]	C	Z
1.750	44.45	3447	3.13	79.4	1.616	41.0	1.3	.22	2.6	66	3.3	15	.52	13.2	0.067	1.7	6.75	SPR	C	Z
1.750	44.45	380	3.50	88.9	1.426	36.2	43	7.5	1.7	43	73	326	1.26	31.9	0.162	4.1	7.75	HD	CG	Z
1.750	44.45	31	4.00	101.6	1.426	36.2	37	6.4	2.0	51	73	326	1.42	36.0	0.162	4.1	8.75	HD	CG	Z
1.750	44.45	11825	4.06	103.2	1.604	40.7	1.2	.21	3.4	87	4.1	18	.62	15.8	0.073	1.9	8.50	SST	CG	N
1.750	44.45	S-1294	4.75	120.7	1.590	40.4	3.1	.55	3.1	78	9.6	43	.44	11.2	0.080	2.0	5.50	SST	C	N
1.750	44.45	11497	4.78	121.4	1.510	38.4	8.1	1.4	3.4	86	26	122	1.36	35.1	0.120	3.0	[illegible]	[illegible]	CG	Z
1.750	44.45	11578	4.81	122.2	1.582	40.2	2.8	.49	4.1	104	12	51	.71	18.1	0.064	2.1	[illegible]	[illegible]	C	N
1.750	44.45	S-3176	5.00	127.0	1.532	38.9	5.0	.87	3.8	97	19	84	1.20	30.5	0.109	2.8	[illegible]	[illegible]	C	N
1.750	44.45	1783	5.38	136.5	1.480	37.6	.16	.28	3.8	96	61	273	1.46	37.3	0.135	3.4	[illegible]	[illegible]	[illegible]	[illegible]
1.750	44.45	S-3194	6.00	152.4	1.592	40.4	1.2	.21	5.1	129	6.0	27	.36	9.1	0.079	2.0	[illegible]	[illegible]	[illegible]	[illegible]
1.750	44.45	10657	6.00	152.4	1.544	39.2	5.2	.91	4.0	102	21	93	.93	23.5	0.103	2.6	9.00	SPR	CG	GI
1.750	44.45	12126	6.81	173.0	1.426	36.2	15	2.5	3.7	95	54	242	3.08	78.2	0.162	4.1	19.0	SPR	CG	Z
1.750	44.45	7011	7.00	177.8	1.184	30.1	200	35	1.7	42	333	1480	5.00	127.0	0.283	7.2	16.6	HD	C	Z
1.750	44.45	3474	7.00	177.8	1.010	25.7	1079	189	.63	16	677	3010	4.26	108.1	0.370	9.4	11.5	SPR	CG	Z
1.750	44.45	3194	7.31	185.7	1.454	36.9	14	2.4	4.2	108	58	256	2.06	52.3	0.148	3.8	14.0	SPR	CG	Z
1.750	44.45	1677	7.80	198.5	1.510	38.3	.63	.11	2.6	67	166	737	3.74	95.0	0.220	5.6	[illegible]	[illegible]	CG	Z
1.750	44.45	4323	8.00	203.2	1.606	40.8	.82	.14	7.1	179	5.8	26	.94	23.8	0.072	1.8	[illegible]	[illegible]	C	Z
1.750	44.45	1779	10.0	254.0	1.426	36.2	14	2.4	5.3	135	73	326	3.40	86.4	0.162	4.1	20.0	[illegible]	C	Z
1.750	44.45	847	10.0	254.0	1.396	35.5	19	3.3	5.1	129	95	423	3.76	95.5	0.177	4.5	[illegible]	[illegible]	CG	Z
1.750	44.45	853	12.0	304.8	1.426	36.2	11	2.0	6.5	165	73	326	4.05	102.9	0.162	4.1	[illegible]	[illegible]	[illegible]	[illegible]
1.750	44.45	844	12.0	304.8	1.366	34.7	21	3.7	5.5	140	115	513	5.14	130.5	0.192	4.9	26.8	HD	CG	Z
1.750	44.45	805	12.0	304.8	1.336	33.9	28	4.9	5.1	130	144	640	5.69	144.6	0.207	5.3	27.5	HD	CG	Z
1.750	44.45	836	12.0	304.8	1.300	33.0	39	6.9	4.5	115	177	787	6.41	162.9	0.225	5.7	28.5	HD	CG	Z
1.750	44.45	4047	21.8	552.5	1.300	33.0	31	5.4	5.8	147	177	787	8.10	205.7	0.225	5.7	36.0	SPR	CG	Z
1.765	44.83	S-126	.75	19.1	1.525	38.7	58	10	.39	9.9	23	101	.36	9.1	0.120	3.0	3.00	SST	CG	N
1.765	44.83	11144	1.25	31.8	1.441	36.6	120	21	.60	15	72	322	.65	16.5	0.162	4.1	4.00	SPR	CG	Z
1.765	44.83	10117	1.69	42.8	1.211	30.8	1142	200	.27	6.9	311	1381	1.18	29.9	0.277	7.0	4.25	SPR	CG	Z
1.765	44.83	B18-203	1.75	44.5	1.527	38.8	26	4.5	1.2	30	31	137	.54	13.6	0.119	3.0	4.50	SPR	CG	N
1.765	44.83	11989	1.84	46.8	1.421	36.1	156	27	.56	14	87	386	.69	17.5	0.172	4.4	4.00	SPR	CG	Z
1.765	44.83	11892	2.91	73.8	1.331	33.8	172	30	.95	24	164	729	1.52	38.6	0.217	5.5	7.00	SPR	CG	N
1.765	44.83	3006	3.13	79.4	1.631	41.4	1.2	.22	2.6	66	3.2	14	.52	13.2	0.067	1.7	6.75	SPR	C	Z
1.781	45.24	S-3175	1.25	31.8	1.599	40.6	18	3.1	.74	19	13	59	.27	6.9	0.091	2.3	3.00	SST	CG	N
1.781	45.24	S-1276	1.31	33.3	1.599	40.6	12	2.1	.90	23	11	48	.41	10.4	0.091	2.3	3.50	SST	C	N
1.781	45.24	3029	1.38	34.9	1.599	40.6	6.1	1.1	.89	23	5.5	24	.49	12.3	0.091	2.3	5.33	SPR	CG	N
1.781	45.24	2697	1.44	36.5	1.257	31.9	1933	338	.14	3.4	262	1166	.79	20.0	0.262	6.7	3.00	HD	CG	Z

CENTURY SPRING CORPORATION

213-749-1466 800-237-5225 FAX 213-749-3802

MATERIAL: MW - Music Wire; SPR - Spring Steel; HD - Hard Drawn; OT - Oil Tempered; SST - Stainless Steel; BC - Beryllium Copper; PB - Phosphor Bronze

ENDS: C - Closed; G - Ground; O - Open

FINISH: Z - Zinc; BO - Black Oxide; GI - Gold Irridite; T - Tinned Wire; N - None

[redacted]

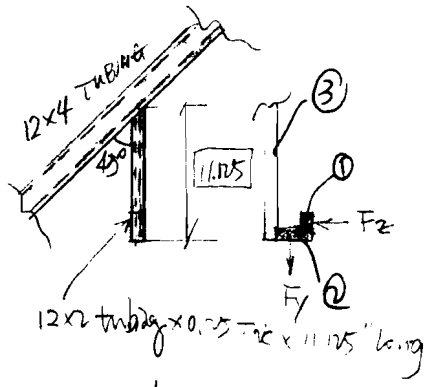

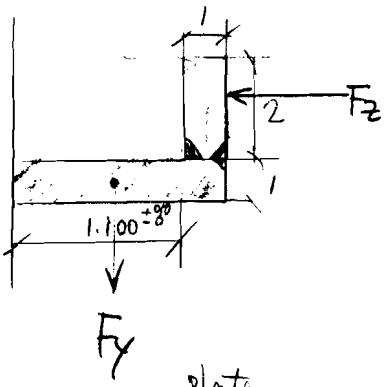

Item 2: plate 1" x 2.100" x 2" x (2) Required
A36

item 1: plate 1" x 2" x 2" x (2) Required
A36

Item 3: Tubing 12x2x0.25" wall x 11.125" long
A500. grade B

From Ansys results, knowing:

$F_Y = 2398\ lb$

$F_Z = 11\ lb$

1) For item ① FIND THE BENDING STRESS:

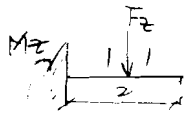

$M_Z = Pb$

where $P = F_Z = 11\ lb$

$b = 1\ in$

$M_Z = 11 \times 1 = 11\ lb\text{-}in$

$S_X = \frac{bd^2}{6}$ where $b = 2\ in$

$d = 1\ in$

$S_X = \frac{2 \times 1^2}{6} = 0.33\ in^3$

$f_b = \frac{M_Z}{S} = \frac{11}{0.33} = 0.033\ ksi$

From the previous study, knowing, the allowable stress is 12ksi.

therefore, the safety Factor is

$SF = \frac{12}{0.033} = 364$

2) FIND COMBINED STRESS FOR ITEM ②

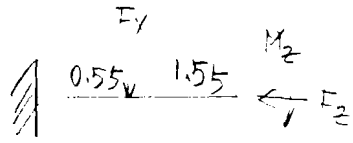

Knowing: $F_y = 2398\ lb$

$F_z = 11\ lb$

$M_z = F_z \times e$

where $F_z = 11\ lb$

$e = 1\ in$

$M_z = 11 \times 1 = 11\ lb\text{-}in$.

O FIND THE SLENDERNESS RATIO $\frac{Kl}{r}$

$\frac{Kl}{r}$ where $K = 2$

$l = 1.55 + 0.55 = 2.1\ in$

$r = \frac{d}{\sqrt{12}}$ where $d = 1.\ in$

$= \frac{1.}{\sqrt{12}} = 0.289\ in$

$$\frac{Kl}{r} = \frac{2 \times 2.1}{0.289} = 14.53$$

O FIND THE Column slenderness ratio C_c

According to AISC, ASD, TABLE 4, page 5-120, knowing when $F_y = 36\ ksi$ for A36, the column slenderness ratio is $C_c = 126.1$

Therefore, $\frac{Kl}{r} < C_c$

0 FIND THE ALLOWABLE COMPRESSION STRESS Fa

According to AISC, ASD. E2, page 5-42, knowing.

when $\frac{Kl}{r} < C_c$, EQ (E2-1) is permitted.

$$F_a = \frac{\left[1 - \frac{(Kl/r)^2}{2C_c^2}\right] F_y}{\frac{5}{3} + \frac{3(Kl/r)}{8C_c} - \frac{\left(\frac{Kl}{r}\right)^3}{8C_c^3}}$$

where: $\frac{Kl}{r} = 14.53$

$F_y = 36$ ksi

$C_c = 126.1$

$$F_a = \frac{\left[1 - \frac{14.53^2}{2 \times 126.1^2}\right] \times 36}{\frac{5}{3} + \frac{3 \times 14.53}{8 \times 126.1} - \frac{(14.53)^3}{8 \times 126.1^3}}$$

$= 20.95$ ksi

According to ANSI / ASME B30.20-1993 Below the Hook Lifting Device, knowing

$F_a = \frac{1}{3} \times F_y$ where $F_y = 36$ ksi for A36

$= \frac{1}{3} \times 36 = 12$ ksi — governs

○ FIND THE COMPUTED COMPRESSION STRESS f_a

$$f_a = \frac{F}{A} \quad \text{where } F = 11\,lb$$

$$A = b \times d = 2 \times 1 = 2\ in^2$$

$$f_a = \frac{11}{2} = 5.5\,psi = 0.006\ ksi$$

○ FIND THE COMPUTED BENDING STRESS f_{bx}

$$M = M_z + M_y .$$

where $M_z = 11\ lb\text{-}in$

$$M_y = F_z \times 0.55 = 2398 \times 0.55 = 1319\ lb\text{-}in$$

$$M = 11 + 1319 = 1330\ lb\text{-}in$$

$$S_x = \frac{bd^2}{6} = \frac{2 \times 1^2}{6} = 0.33\ in^3$$

$$f_{bx} = \frac{M}{S_x} = \frac{1330}{0.33} = 4.030\ ksi$$

○ FIND THE ALLOWABLE BENDING STRESS F_{by}

According to AISC, ASD, F1, page 5-47, knowing the allowable bending stress is

$$F_{by} = 0.60\,F_y \quad \text{where } F_y = 36\ ksi \text{ for A36}$$

$$= 0.60 \times 36$$

$$= 21.6\ ksi$$

According to ANSI/ASME B30.20-1993 Below the Hook Lifting Device, knowing

$F_{by} = \frac{1}{3} F_y$ where $F_y = 36$ ksi for A36

$= \frac{1}{3} \times 36 = 12$ ksi — governs

0 FIND THE COMBINED STRESSES

According to AISC, ASD, H1, page 5-54, showing:

when $\frac{f_a}{F_a} \leq 0.15$, Equation EQ (H1-3) is permitted.

$\frac{f_a}{F_a}$ where $f_a = 0.006$ ksi

$F_a = 12$ ksi

$$\frac{f_a}{F_a} = \frac{0.006}{12} = 5 \times 10^{-4} \ll 0.15.$$

therefore,

$$\frac{f_a}{F_a} + \frac{f_{bx}}{F_{bx}} + \frac{f_{by}}{F_{by}} \leq 1.0$$

where $f_a = 0.006$ ksi

$F_a = 12$ ksi

$f_{by} = 4.030$ ksi

$F_{by} = 12$ ksi

$$\frac{0.006}{12} + \frac{4.030}{12} = 0.336 \ll 1.0.$$

$$SF = \frac{1.0}{0.336} = 2.98$$

In conclusion, the member size is adequate to carry the loads.

3) FIND THE COMBINED STRESS FOR ITEM ③

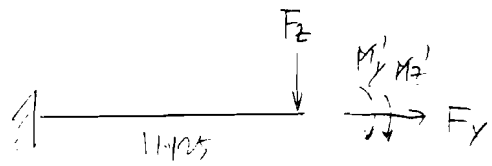

Knowing: $F_z = 11\ lb$

$F_y = 2398\ lb$

$M_y' = 2398 \times \left(\frac{10}{2} + \frac{12}{2}\right) = 15707\ lb\text{-}in$

$M_z' = 11 \times \left(\frac{2}{2} + 1\right) = 22\ lb\text{-}in$

① FIND THE ALLOWABLE TENSILE STRESS F_t

According to AISC, ASD, D1, page 5-40, knowing, the allowable Tensile stress is

$F_a = 0.60 F_y$ where $F_y = 46\ ksi$ for A500 grade B

$= 0.60 \times 46 = 27.6\ ksi$

According to ANSI/ASME, B30.10-1993, Below the Hook Lifting Device, knowing:

$F_a = \frac{1}{3} F_y$ where $F_y = 46\ ksi$ for A500 grade B

$F_a = \frac{1}{3} \times 46 = 15.3\ ksi$ —— governs

O FIND THE COMPUTED TENSILE STRESS f_t

$f_t = \frac{F}{A}$ where $F = F_y = 2398$ lb

$A = 6.59$ in^2 for 12x2x0.25 THK

$f_t = \frac{2398}{6.59} = 0.364$ ksi

O FIND THE ALLOWABLE BENDING STRESS F_{bx}

According to AISC, ASD, F3, page 5-49, knowing, the allowable bending stress is

$F_{bx} = 0.60 F_y$ where $F_y = 46$ ksi for A500 grade B

$= 0.60 \times 36$

$= 27.6$ ksi

According to ANSI/ASME, B30.20-1993 Below the Hook Lifting Device, knowing:

$F_{bx} = \frac{1}{3} F_y$ where $F_y = 46$ ksi for A500 grade B

$= \frac{1}{3} \times 46 = 15.3$ ksi —— governs

O FIND THE COMPUTED BENDING STRESS f_{bx}

$$M_{bx} = F_z \times 11.375 + M_y' + M_z'$$
$$= 11 \times 11.375 + 15707 + 22$$
$$= 15851.375 \text{ lb-in}$$

$S_x = 15.4 \text{ in}^3$ for 12x2 tubing. (1/4" wall thickness)

$$f_{bx} = \frac{M_{bx}}{S_x} = \frac{15851.375}{15.4} = 1.029 \text{ ksi}$$

O FIND THE COMBINED STRESSES

According to AISC, ASD, H2, page 5-55, knowing

$$\frac{f_a}{F_t} + \frac{f_{bx}}{F_{bx}} + \frac{f_{by}}{F_{by}} \leq 1.0$$

where $f_a = 0.364$ ksi

$F_a = 15.3$ ksi

$f_{bx} = 1.029$ ksi

$F_{bx} = 15.3$ ksi

$$\frac{0.364}{15.3} + \frac{1.029}{15.3} = 0.09 \ll 1.0$$

$$SF = \frac{1.0}{0.09} = 10.98$$

In conclusion, the tubing 12x2x1/4 wall is adequate to carry the loads.

[redacted] DESIGN THE WELDS.

a) For item ① & ②

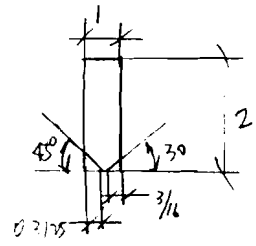

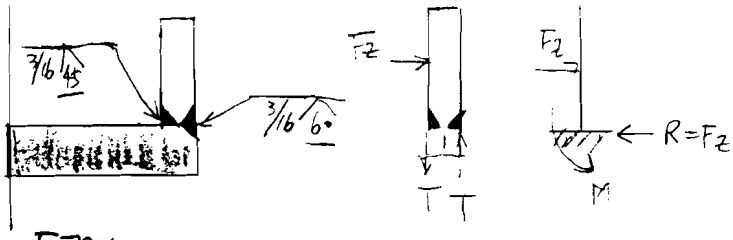

E70XX WELDS

From the previous study, knowing.

$F_z = 11\ lb$

$M_z = 11\ lb\text{-}in$

$M_z = P \times e$ where $P = T$

$e = 1\ in$

$$T = \frac{M_z}{e} = \frac{11}{1} = 11\ lb$$

① DETERMINE THE FORCE ON THE WELDS.

$$f = \sqrt{f_1^2 + f_2^2}$$ where $f_1 = T = 11\ lb$

$f_2 = \frac{1}{2} F_z = \frac{1}{2} \times 11 = 5.5\ lb$

$$f = \sqrt{11^2 + 5.5^2}$$

$$= 12.30\ lb$$

① FIND THE ALLOWABLE STRESS ON THE WELDS

According to AISC, ASD, Table J2.5, page 5-70, knowing, for partial-penetration Groove welds under compression normal to effective area

the allowable stress is the same as the base metal.

According to ANSI-ASME, B30.20-1993, Below the Hook Lifting Device, knowing, the allowable is equal to one third of the yield stress.

$allow = \frac{1}{3}F_y = \frac{1}{3} \times 36 = 12$ ksi where $F_y = 36$ ksi for A36.

o FIND THE ALLOWABLE LOAD ON THE WELDS.

According to AISC, ASC, PREQUALIFIED WELDED JOINTS, page 4-170, knowing. Single V-groove weld and Single-bevel-groove weld are acceptable.

According to AISC, ASD, TABLE J2.3, page 5-66, knowing, the size of the weld is 3/16".

Then, the allowable load on the welds is

$$0.707 \times 3/16 \times 12 = 1.59 \text{ kips/in}.$$

knowing, L=2 in, the allowable load is

$$1.59 \text{ kips/in} \times 2 = 3.18 \text{ kips}$$

$$SF = \frac{3.18 \times 10^3}{12.30} = 2.6 \times 10^2$$

b) FOR ITEMS ② & ③

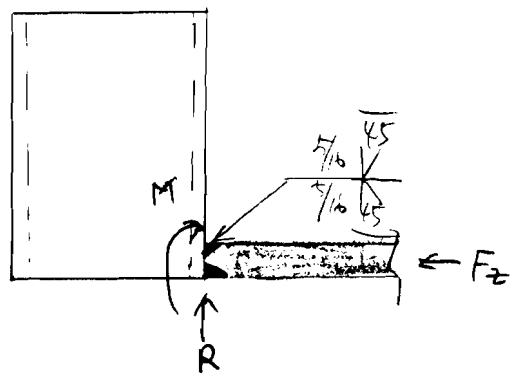

From the previous study, known:

$F_z = 11\ lb$

$R = 2398\ lb$

$M = M_y + M_z = 1210\ lb\text{-}in$

0 DETERMINE THE FORCE ON WELDS.

$M = T \times e$ where $M = 1330\ lb\text{-}in$
$e = 1\ in$

$$T = \frac{M}{e} = \frac{1330}{1} = 1330\ lb.$$

$f_x = T + F_z$ where $T = 1330\ lb$
$F_z = 11\ lb$

$f_x = 1330 + 11 = 1341\ lb$

$f_y = R = 2398\ lb$

$f_r = \sqrt{f_x^2 + f_y^2}$ where $f_x = 1341\ lb$
$f_y = 2398\ lb$

$= \sqrt{1341^2 + 2398^2}$

$= 2747\ lb$

For one weld:

$$f_r' = \frac{1}{2} f_r = \frac{1}{2} \times 2747 = 1.38\ \text{Kips}$$

○ FIND THE ALLOWABLE STRESS ON THE WELDS.

According to AISC, ASD, Table J2.5, page 5-70, knowing, for partial-penetration Groove welds under compression normal to effective area, the allowable stress is the same as the base metal.

According to ANSI/ASME, B30.20-1993, Below the Hook Lifting Device. knowing: the allowable is equal to one third of the yield stress.

therefore.

$\frac{1}{3}F_y$ where $F_y = 36$ ksi for A36.

$\frac{1}{3} \times 36 = 12$ ksi

○ FIND THE ALLOWABLE LOAD ON WELDS

According to AISC, ASC, PREQUALIFIED WELDED JOINTS, page 4-170, knowing, Double bevel-groove weld is acceptable.

According to AISC, ASD, TABLE J2.3, Page 5-66 knowing, the size of the weld is $5/16''$.

Then the allowable load on the welds is

$$0.707 \times 5/16 \times 12 = 2.65 \text{ kips/in}$$

TABLE 1 Permissible Variations in Thickness for Rectangular, Carbon, High-Strength, Low-Alloy, and Alloy-Steel Plates, 15 in. and Under in Thickness When Ordered to Thickness

NOTE 1—Tables 1 through 31, inclusive, contain permissible variations in dimensions stated in inch-pound units.
NOTE 2—Permissible variation under specified thickness, 0.01 in.
NOTE 3—Thickness to be measured at ⅜ to ¾ in. from the longitudinal edge.
NOTE 4—For thickness measured at any location other than that specified in Note 3, the permissible maximum over tolerance shall be increased by 75 %, rounded to the nearest 0.01 in.
NOTE 5—Where "..." appears in this table there is no requirement.

Specified Thickness, in.	Tolerance Over Specified Thickness for Widths Given, in.											
	48 and under	Over 48 to 60, excl	60 to 72, excl	72 to 84, excl	84 to 96, excl	96 to 108, excl	108 to 120, excl	120 to 132, excl	132 to 144, excl	144 to 168, excl	168 to 182, excl	182 and over
To ¼, excl	0.03	0.03	0.03	0.03	0.03	0.03	0.03	0.03	0.04	...	...	...
¼ to 5/16, excl	0.03	0.03	0.03	0.03	0.03	0.03	0.03	0.04	0.04	...	...	...
5/16 to ⅜, excl	0.03	0.03	0.03	0.03	0.03	0.03	0.03	0.04	0.04	0.05	...	...
⅜ to 7/16, excl	0.03	0.03	0.03	0.03	0.03	0.03	0.04	0.04	0.05	0.06	0.06	...
7/16 to ½, excl	0.03	0.03	0.03	0.03	0.03	0.03	0.04	0.04	0.05	0.06	0.06	...
½ to ⅝, excl	0.03	0.03	0.03	0.03	0.03	0.03	0.04	0.04	0.05	0.06	0.07	...
⅝ to ¾, excl	0.03	0.03	0.03	0.03	0.03	0.04	0.04	0.04	0.05	0.06	0.07	0.07
¾ to 1, excl	0.03	0.03	0.03	0.03	0.04	0.04	0.05	0.05	0.06	0.07	0.08	0.09
1 to 2, excl	0.06	0.06	0.06	0.06	0.06	0.07	0.08	0.10	0.10	0.11	0.13	0.15
2 to 3, excl	0.09	0.09	0.09	0.10	0.10	0.11	0.12	0.13	0.14	0.15	0.15	...
3 to 4, excl	0.11	0.11	0.11	0.11	0.11	0.13	0.14	0.14	0.14	0.15	0.17	...
4 to 6, excl	0.15	0.15	0.15	0.15	0.15	0.15	0.15	0.15	0.15	0.20	0.20	...
6 to 10, excl	0.23	0.24	0.24	0.24	0.24	0.24	0.24	0.24	0.24	0.27	0.28	...
10 to 12, excl	0.29	0.29	0.33	0.33	0.33	0.33	0.33	0.33	0.33	0.33	0.35	...
12 to 15, incl	0.29	0.29	0.35	0.35	0.35	0.35	0.35	0.35	0.35	0.35	0.35	...

TABLE 2 Permissible Variations in Weight for Rectangular Sheared Plates and Universal Mill Plates 613.0 lb/ft² and Under When Ordered to Weight

NOTE 1—Permissible variations in overweight for lots of circular and sketch plates shall be 1¼ times the amounts in this table.
NOTE 2—Permissible variations in overweight for single plates shall be 1½ times the amounts in this table.
NOTE 3—Permissible variations in overweight for single circular and sketch plates shall be 1⅔ times the amounts in this table.
NOTE 4—The adopted standard density of rolled steel is 490 lb/ft³.
NOTE 5—Where "..." appears in this table there is no requirement.

Specified Weights, lb/ft²	Permissible Variation in Average Weight of Lots[A] for Widths Given in Inches, Expressed in Percentage of the Specified Weights per Square Foot																					
	48 and under		Over 48 to 60, excl		60 to 72, excl		72 to 84, excl		84 to 96, excl		96 to 108, excl		108 to 120, excl		120 to 132, excl		132 to 144, excl		144 to 168, excl		168 and over	
	Over	Under	Over	Under	Over	Under	Over	Under	Over	Under	Over	Under	Over	Under	Over	Under	Over	Under	Over	Under	Over	Under
To 10, excl	4.0	3.0	4.5	3.0	5.0	3.0	5.5	3.0	6.0	3.0	7.5	3.0	9.0	3.0	11.0	3.0	13.0	3.0	...	...	...	...
10 to 12.5, excl	4.0	3.0	4.5	3.0	4.5	3.0	5.0	3.0	5.5	3.0	6.5	3.0	7.0	3.0	8.0	3.0	9.0	3.0	12.0	3.0	...	...
12.5 to 15.0, excl	4.0	3.0	4.0	3.0	4.5	3.0	4.5	3.0	5.0	3.0	5.5	3.0	6.0	3.0	7.5	3.0	8.0	3.0	11.0	3.0	...	...
15 to 17.5, excl	3.5	3.0	3.5	3.0	4.0	3.0	4.5	3.0	4.5	3.0	5.0	3.0	5.5	3.0	6.0	3.0	7.0	3.0	9.0	3.0	10.0	3.0
17.5 to 20, excl	3.5	2.5	3.5	2.5	3.5	3.0	4.0	3.0	4.5	3.0	4.5	3.0	5.0	3.0	5.5	3.0	6.0	3.0	8.0	3.0	9.0	3.0
20 to 25, excl	3.5	2.5	3.5	2.5	3.5	3.0	3.5	3.0	4.0	3.0	4.0	3.0	4.5	3.0	5.0	3.0	5.5	3.0	7.0	3.0	8.0	3.0
25 to 30, excl	3.0	2.5	3.5	2.5	3.5	2.5	3.5	3.0	3.5	3.0	3.5	3.0	4.0	3.0	4.5	3.0	5.0	3.0	6.5	3.0	7.0	3.0
30 to 40, excl	3.0	2.0	3.0	2.0	3.0	2.0	3.0	2.0	3.5	2.0	3.5	2.5	3.5	2.5	4.0	3.0	4.5	3.0	6.0	3.0	6.5	3.0
40 to 81.7, excl	2.5	2.0	3.0	2.0	3.0	2.0	3.0	2.0	3.5	2.0	3.5	2.0	3.5	2.5	3.5	3.0	4.0	3.0	5.5	3.0	6.0	3.0
81.7 to 122.6, excl	2.5	2.0	3.0	2.0	3.0	2.0	3.0	2.0	3.5	2.0	3.5	2.0	3.5	2.5	3.5	3.0	3.5	3.0	4.0	3.0	4.5	3.0
122.6 to 163.4, excl	2.5	1.5	2.5	1.5	2.5	1.5	2.5	1.5	2.5	2.0	2.5	2.0	2.5	2.0	2.5	2.0	2.5	2.0	3.0	2.0	3.5	2.0
163.4 to 245.1, excl	2.5	1.0	2.5	1.0	2.5	1.0	2.5	1.0	2.5	1.0	2.5	1.0	2.5	1.0	2.5	1.0	2.5	1.0	3.0	1.0	3.5	1.0
245.1 to 409.0, excl	2.5	1.0	2.5	1.0	2.5	1.0	2.5	1.0	2.5	1.0	2.5	1.0	2.5	1.0	2.5	1.0	2.5	1.0	2.5	1.0	3.0	1.0
409.0 to 490.1, excl	2.0	1.0	2.0	1.0	2.5	1.0	2.5	1.0	2.5	1.0	2.5	1.0	2.5	1.0	2.5	1.0	2.5	1.0	2.5	1.0	2.5	1.0
490.1 to 613.0, excl	2.0	1.0	2.0	1.0	2.0	1.0	2.0	1.0	2.5	1.0	2.5	1.0	2.5	1.0	2.5	1.0	2.5	1.0	2.5	1.0	2.5	1.0

[A] The term "lot" means all the plates of each tabular width and weight group represented in each shipment.

18.5 When full-section test specimens have been used for the qualification of angles, that information shall be stated on the test report.

18.6 A signature is not required on the test report. However, the document shall clearly identify the organization submitting the report. Notwithstanding the absence of a signature, the organization submitting the report is responsible for the content of the report.

18.7 When finished material is supplied to a purchase order specifying an ASTM material specification listed in the Scope section of Specification A 6/A 6M, the organization supplying that material shall provide the purchaser with a copy of the original manufacturer's test report.

18.8 A Material Test Report, Certificate of Inspection, or similar document printed from or used in electronic form from an electronic data interchange (EDI) transmission shall be regarded as having the same validity as a counterpart printed in the certifier's facility. The content of the EDI transmitted document must meet the requirements of the invoked ASTM standard(s) and conform to any existing EDI agreement between the purchaser and the supplier. Notwithstanding the absence of a signature, the organization submitting the EDI transmission is responsible for the content of the report.

NOTE 3—The industry definition as invoked here is: EDI is the computer to computer exchange of business information in a standard format such as ANSI ASC X12.

TABLE 13 Permissible Variations From Flatness for Carbon Steel Plates

NOTE 1—When the longer dimension is under 36 in., the permissible variation should not exceed ¼ in. When the longer dimension is from 36 to 72 in., incl, the permissible variation should not exceed 75 % of the tabular amount for the specified width, but in no case less than ¼ in.

NOTE 2—These variations apply to plates which have a specified minimum tensile strength of not more than 60 ksi [415 MPa] or comparable chemical composition or hardness. The limits in the table are increased 50 % for plates specified to a higher minimum tensile strength or compatible chemistry or hardness.

NOTE 3—This table and these notes cover the permissible variations for flatness of circular and sketch plates, based on the maximum dimensions of those plates.

NOTE 4—Where "..." appears in this table there is no requirement.

Specified Thickness, in.	Specified Weight, lb/ft²	Permissible Variations from a Flat Surface for Specified Widths, in.[A,B]										
		To 36, excl	36 to 48, excl	48 to 60, excl	60 to 72, excl	72 to 84, excl	84 to 96, excl	96 to 108, excl	108 to 120, excl	120 to 144, excl	[illegible]	168 and Over
To ¼, excl	To 10.2, excl	9/16	¾	13/16	1¼	1⅜	1½	1⅝	1¾	1⅞	...	...
¼ to ⅜, excl	10.2 to 15.3, excl	½	⅝	¾	13/16	1⅛	1¼	1⅜	1½	1⅝	...	...
⅜ to ½, excl	15.3 to 20.4, excl	½	9/16	⅝	⅝	¾	⅞	1	1⅛	1¼	1⅞	2⅛
½ to ¾, excl	20.4 to 30.6, excl	7/16	½	9/16	⅝	⅝	¾	1	1	1⅛	1½	2
¾ to 1, excl	30.6 to 40.8, excl	7/16	½	9/16	⅝	⅝	⅝	¾	⅞	1	1⅜	1¾
1 to 2, excl	40.8 to 81.7, excl	⅜	½	½	9/16	9/16	⅝	⅝	⅝	11/16	1⅛	1½
2 to 4, excl	81.7 to 163.4, excl	9/16	⅜	7/16	½	½	½	½	9/16	⅝	⅞	1⅛
4 to 6, excl	163.4 to 245.1, excl	⅜	7/16	½	½	9/16	9/16	⅝	¾	⅞	⅞	1
6 to 8, excl	245.1 to 326.8, excl	7/16	½	½	⅝	11/16	¾	⅞	⅞	1	1	1
8 to 10, excl	326.8 to 409.0, excl	½	½	⅝	11/16	¾	13/16	⅞	15/16	1	1	1
10 to 12, excl	409.0 to 490.1, excl	½	⅝	¾	13/16	⅞	15/16	1	1	1	1	1
12 to 15, excl	490.1 to 613.0, incl	⅝	¾	13/16	⅞	15/16	1	1	1	1	1	...

[A] *Flatness Variations for Length*—The longer dimension specified is considered the length, and permissible variations in flatness along the length should not exceed the tabular amount for the specified width in plates up to 12 ft in length, or in any 12 ft of longer plates.

[B] *Flatness Variations for Width*—The flatness variations across the width should not exceed the tabular amount for the specified width.

TABLE 14 Permissible Variations From Flatness for High-Strength, Low-Alloy, and Alloy Steel Plates, Hot Rolled or Thermally Treated

NOTE 1—When the longer dimension is under 36 in., the variation should not exceed ⅝ in. When the larger dimension is from 36 to 72 in. incl, the variation should not exceed 75 % of the tabular amount for the specified width.

NOTE 2—This table and notes cover the tolerances for flatness of circular and sketch plates, based on the maximum dimensions of those plates.

NOTE 3—Where "..." appears in this table there is no requirement.

Specified Thickness, in.	Specified Weights, lb/ft²	Flatness Tolerances for Specified Widths, in.[A,B]										
		To 36, excl	36 to 48, excl	48 to 60, excl	60 to 72, excl	72 to 84, excl	84 to 96, excl	96 to 108, excl	108 to 120, excl	120 to 144, excl	144 to 168, excl	168 and Over
To ¼, excl	To 10.2 excl	13/16	1⅛	1⅜	1⅞	2	2¼	2⅜	2⅝	2¾	...	...
¼ to ⅜, excl	10.2 to 15.3, excl	¾	15/16	1⅛	1⅜	1¾	1⅞	2	2¼	2⅜	...	...
⅜ to ½, excl	15.3 to 20.4, excl	¾	⅞	15/16	15/16	1⅛	1 5/16	1½	1⅝	1⅞	2¾	3⅛
½ to ¾, excl	20.4 to 30.6, excl	⅝	¾	13/16	⅞	1	1⅛	1¼	1⅜	1⅝	2¼	3
¾ to 1, excl	30.6 to 40.8, excl	⅝	¾	⅞	⅞	15/16	1	1⅛	1 5/16	1½	2	2⅝
1 to 2, excl	40.8 to 81.7, excl	9/16	⅝	¾	13/16	⅞	15/16	1	1	1	1⅝	2¼
2 to 4, excl	81.7 to 163.4, excl	½	9/16	11/16	¾	¾	¾	¾	⅞	1	1¼	1⅝
4 to 6, excl	163.4 to 245.1, excl	9/16	11/16	¾	¾	⅞	⅞	15/16	1⅛	1¼	1¼	1½
6 to 8, excl	245.1 to 326.8, excl	⅝	¾	¾	15/16	1	1⅛	1¼	1 5/16	1½	1½	1⅞
8 to 10, excl	326.8 to 409.0, excl	¾	13/16	15/16	1	1½	1¼	1 5/16	1⅜	1½	1½	1½
10 to 12, excl	409.0 to 490.1, excl	¾	15/16	1⅛	1¼	1 5/16	1⅜	1½	1⅞	1½	1½	1½
12 to 15, incl	490.1 to 613.0, incl	⅞	1	1 5/16	1 5/16	1⅜	1½	1⅞	1½	1½	1½	1½

[A] *Flatness Variations for Length*—The longer dimension specified is considered the length, and variations from a flat surface along the length should not exceed the tabular amount for the specified width in plates up to 12 ft in length, or in any 12 ft of longer plates.

[B] *Flatness Variations for Width*—The flatness variation across the width should not exceed the tabular amount for the specified width.

used independently of the other. Combining values from the two systems may result in nonconformance with the specification.

1.12 This specification and the applicable material specifications are expressed in both inch-pound units and SI units. However, unless the order specifies the applicable "M" specification designation (SI units), the material shall be furnished to inch-pound units.

2. Referenced Documents

2.1 *ASTM Standards:*

A 370 Test Methods and Definitions for Mechanical Testing of Steel Products[4]

A 673/A 673M Specification for Sampling Procedure for Impact Testing of Structural Steel[3]

A 700 Practices for Packaging, Marking, and Loading Methods for Steel Products for Domestic Shipment[5]

A 751 Test Methods, Practices, and Terminology for Chemical Analysis of Steel Products[4]

E 29 Practice Using Significant Digits in Test Data to Determine Conformance with Specifications[6]

E 112 Test Methods for Determining Average Grain Size[7]

E 208 Test Method for Conducting Drop-Weight Test to Determine Nil-Ductility Transition Temperature of Ferritic Steels[7]

2.2 *American Welding Society Standards:*

A5.1 Mild Steel Covered Arc-Welding Electrodes[8]

A5.5 Low-Alloy Steel Covered Arc-Welding Electrodes[8]

2.3 *U.S. Military Standards:*

MIL-STD-129 Marking for Shipment and Storage[9]

MIL-STD-163 Steel Mill Products Preparation for Shipment and Storage[9]

2.4 *U.S. Federal Standard:*

Fed. Std. No. 123 Marking for Shipments (Civil Agencies)[9]

3. Terminology

3.1 *Descriptions of Terms Specific to This Standard:*

3.1.1 *Plates* (other than floor plates or coiled product)—Flat, hot-rolled steel, classified as follows:

3.1.1.1 *When Ordered to Thickness:*

(*1*) Over 8 in. [200 mm] in width and 0.230 in. [over 6 mm] or over in thickness.

(*2*) Over 48 in. [1200 mm] in width and 0.180 in. [over 4.5 mm] or over in thickness.

3.1.1.2 *When Ordered to Weight:*

(*1*) Over 8 in. [200 mm] in width and 9.392 lb/ft^2 [over 47.10 kg/m^2] or heavier.

(*2*) Over 48 in. [1200 mm] in width and 7.350 lb/ft^2 [over 35.32 kg/m^2] or heavier.

3.1.1.3 Slabs, sheet bars, and skelp, though frequently falling in the foregoing size ranges, are not classed as plates.

3.1.1.4 Coiled product is excluded from qualification to this specification until cut to length (see 5.4.2).

3.1.2 *Shapes (Flanged Sections):*

3.1.2.1 *structural-size shapes*—rolled flanged sections having at least one dimension of the cross section 3 in. [75 mm] or greater. Structural shape size groupings used for tensile property classification are listed in Table A.

3.1.2.2 *bar size shapes*—rolled flanged sections having a maximum dimension of the cross section less than 3 in. [75 mm].

3.1.2.3 *"W" shapes*—are doubly-symmetric, wide-flange shapes used as beams or columns whose inside flange surfaces are substantially parallel. A shape having essentially the same nominal weight and dimensions as a "W" shape listed in Table A but whose inside flange surfaces are not parallel may also be considered a "W" shape having the same nomenclature as the tabulated shape, provided its average flange thickness is essentially the same as the flange thickness of the "W" shape.

3.1.2.4 *"HP" shapes*—are wide-flange shapes generally used as bearing piles whose flanges and webs are of the same nominal thickness and whose depth and width are essentially the same.

3.1.2.5 *"S" shapes*—doubly-symmetric shapes produced in accordance with dimensional standards adopted in 1896 by the Association of American Steel Manufacturers for American Standard beam shapes. The essential part of these standards is that the inside flange surfaces of American Standard beam shapes have approximately 16⅔ % slope.

3.1.2.6 *"M" shapes*—doubly-symmetric shapes that cannot be classified as "W," "S," or "HP" shapes.

3.1.2.7 *"C" shapes*—channels produced in accordance with dimensional standards adopted in 1896 by the Association of American Steel Manufacturers for American Standard channels. The essential part of these standards is that the inside flange surfaces of American Standard channels have approximately a 16⅔ % slope.

3.1.2.8 *"MC" shapes*—channels that cannot be classified as "C" shapes.

3.1.2.9 *"L" shapes*—shapes having equal-leg and unequal-leg angles.

3.1.3 *Sheet Piling*—steel sheet piling consists of rolled sections that can be interlocked, forming a continuous wall when individual pieces are driven side by side.

3.1.4 *bars*—rounds, squares, and hexagons, of all sizes; flats 13/64 in. (0.2031 in.) [over 5 mm] and over in specified thickness, not over 6 in. [150 mm] in specified width; and flats 0.230 in. [over 6 mm] and over in specified thickness, over 6 to 8 in. [150 to 200 mm] inclusive, in specified width.

3.1.5 *exclusive*—when used in relation to ranges, as for ranges of thickness in the tables of permissible variations in dimensions, is intended to exclude only the greater value of the range. Thus, a range from 60 to 72 in. [1500 to 1800 mm] exclusive includes 60 in. [1500 mm], but does not include 72 in. [1800 mm].

3.1.6 *rimmed steel*—steel containing sufficient oxygen to give a continuous evolution of carbon monoxide during solidification, resulting in a case or rim of metal virtually free of voids.

3.1.7 *semi-killed steel*—incompletely deoxidized steel containing sufficient oxygen to form enough carbon monoxide during solidification to offset solidification shrinkage.

[4] *Annual Book of ASTM Standards*, Vol 01.03.

[5] *Annual Book of ASTM Standards*, Vol 01.05.

[6] *Annual Book of ASTM Standards*, Vol 14.02.

[7] *Annual Book of ASTM Standards*, Vol 03.01.

[8] Available from the American Welding Society, 550 N.W. LaJeune Rd., Miami, FL 33135.

[9] Available from the procuring activity or as directed by the contracting office or from the Standardization Documents Order Desk, Bldg. 4 Section D, 700 Robbins Ave., Philadelphia, PA 19111-5094 Attn: NPODS.

TABLE 15 Permissible Variations in Waviness for Plates

NOTE—Waviness denotes the maximum deviation of the surface of the plate from a plane parallel to the surface of the point of measurement and contiguous to the surface of the plate at each of the two adjacent wave peaks, when the plate is resting on a flat horizontal surface, as measured in an increment of less than 12 ft of length.

The waviness tolerance is a function of the flatness tolerance as obtained from Table 13 or 14 as appropriate.

Flatness Tolerance, in., from Tables 13 or 14	Waviness Tolerance, in., When Number of Waves in 12 ft is						
	1	2	3	4	5	6	7
9/16	9/16	1/4	3/16	1/8	1/8	1/16	1/16
3/8	3/8	5/16	3/16	3/16	1/8	1/16	1/16
7/16	7/16	5/16	1/4	3/16	1/8	1/8	1/16
1/2	1/2	3/8	5/16	3/16	3/16	1/8	1/16
9/16	9/16	7/16	5/16	1/4	3/16	1/8	1/8
5/8	5/8	1/2	3/8	1/4	3/16	1/8	1/8
11/16	11/16	1/2	3/8	5/16	3/16	5/16	1/8
3/4	3/4	9/16	7/16	5/16	1/8	5/16	1/8
13/16	13/16	5/8	7/16	5/16	1/4	3/16	1/8
7/8	7/8	11/16	1/2	3/8	1/4	3/16	1/8
15/16	15/16	11/16	1/2	3/8	5/16	1/4	3/16
1	1	3/4	9/16	7/16	5/16	1/4	3/16
1 1/8	1 1/8	7/8	5/8	1/2	3/8	1/4	3/16
1 1/4	1 1/4	15/16	11/16	1/2	3/8	5/16	1/4
1 3/8	1 3/8	1 1/16	3/4	9/16	7/16	5/16	1/4
1 1/2	1 1/2	1 1/8	7/8	5/8	1/2	3/8	1/4
1 5/8	1 5/8	1 1/4	15/16	11/16	1/2	3/8	5/16
1 3/4	1 3/4	1 5/16	1	3/4	9/16	7/16	5/16
1 7/8	1 7/8	1 7/16	1 1/16	13/16	9/16	7/16	5/16
2	2	1 1/2	1 1/8	7/8	5/8	1/2	3/8
2 1/8	2 1/8	1 5/8	1 3/16	7/8	11/16	1/2	3/8
2 1/4	2 1/4	1 11/16	1 1/4	15/16	11/16	9/16	3/8
2 3/8	2 3/8	1 13/16	1 5/16	1	3/4	9/16	7/16
2 1/2	2 1/2	1 7/8	1 7/16	1 1/16	13/16	9/16	7/16
2 5/8	2 5/8	2	1 1/2	1 1/8	13/16	5/8	7/16
2 3/4	2 3/4	2 1/16	1 9/16	1 1/8	7/8	5/8	1/2
2 7/8	2 7/8	2 3/16	1 5/8	1 3/16	15/16	11/16	1/2
3	3	2 1/4	1 11/16	1 1/4	15/16	11/16	9/16
3 1/8	3 1/8	2 3/8	1 3/4	1 5/16	1	3/4	9/16

Among: $L = 1.5$ in, the allowable load is

$$2.65 \times 1.5 = 3.98 \text{ kips}.$$

$$SF = \frac{3.98}{1.38} = 2.88$$

⓪ FIND THE TOLERANCE ON ITEM ②

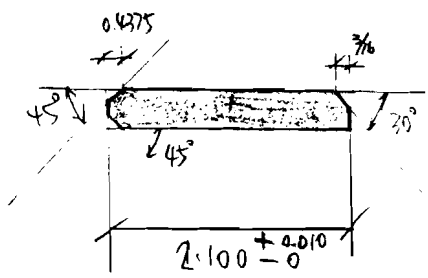

According to ASTM A6, TABLE 1, page 13, and TABLE 13, page 16, among, the permissible variation in thickness for carbon steel 1" plate is 0.11 in.

then, use $\boxed{1.100 \; {}^{+0.010}_{-0}}$

C) For item ③ to strongback

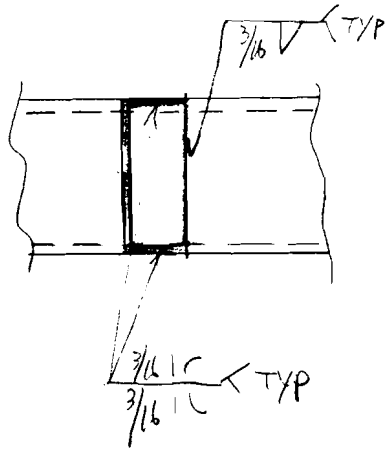

From the previous study, knowing:

$F_y = 2338$ lb

$R = 11$ lb

$M = 15851.375$ lb-in

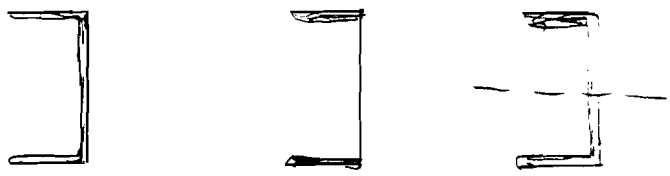

Tension/compression — shear — bending

$\odot$ F_y — $\rightarrow$ R

According to "Design of welded structures" Blodgett, section 7.4-7, page 7.4-7, Table 5 – properties of weld treated as line,

Knowing:

Bending: $S_W = bd + \frac{d^2}{6}$ where $b = 2$ in, $d = 12$ in

$= 2 \times 12 + \frac{12^2}{6}$

$= 48 \text{ in}^2$

O DETERMINE FORCE ON WELD:

Tension/compression: $f_1 = \frac{P}{A_w}$ where $P = F_y = 2398$ lb

$A_w = 2 \times 2 + 12$
$= 16$ in

$f_1 = \frac{2398}{16}$
$= 149.875$ lb/in

Shear:

$f_2 = \frac{V}{A_w}$ where $V = R = 11$ lb

$A_w = 2 \times 2 = 4$ in

$f_2 = \frac{11}{4} = 2.75$ lb/in

Bending:

$f_1' = \frac{M}{S}$ where $M = 15851.375$ lb-in

$S = S_w = 48$ in

$f_1' = \frac{15851.375}{48}$
$= 330.24$ lb/in.

O DETERMINE WELD SIZE BY USING ALLOWABLES:

According to "Design of welded structures" Blodgett, section 24, page 24-7, knowing:

The resultant force is equal to the square root of the sum of the squares of these three forces

$$f_r = \sqrt{f_1^2 + f_2^2} = \sqrt{(f_1 + f_1')^2 + f_2^2}$$
$$= \sqrt{(149.875 + 330.24)^2 + 2.75^2}$$
$$= 480.12 \text{ lb/in} = 0.48 \text{ kips/in}$$

According to AISC, ASD, page 4-173, knowing : for top & bottom flanges, the flare bevel groove weld is acceptable.

According to AISC, ASD, Table J2.2 & Table J2.3, page 5-66, knowing the effective throat thickness is 3/16".

According to AISC, ASD, Table J2.4, page 5-67, knowing the effective throat thickness is 3/16" for fillet weld on the side.

According to AISC, ASD, Table J2.5, page 5-70, knowing the allowable stress on welds is the same as base metal.

According to ANSI/ASME, B30.20-1993. Below the Hook Lifting Devices. knowing, the allowable stress is equal to 1/3 Fy. where Fy = 46 ksi for A500 grade B tubing

$$\frac{1}{3}F_y = \frac{1}{3} \times 46 = 15.33 \text{ ksi}$$

therefore, the allowable loads in kips/in is

$$15.33 \times 0.707 \times \frac{3}{16} = 2.03 \text{ kips/in}$$

$$SF = \frac{2.03}{0.48} = 4.24$$

The welds design shown above is adequate to carry the loads.

Clamping Device weight:

1) clamping plate: $10'' \times 4'' \times 1'' \times (2) \longrightarrow 23\,lb$

2) Angle plate weldment: $[(10'' \times 0.5'' \times 4'') + (16'' \times 0.5'' \times 4'')] \times (2) \rightarrow 38\,lb$

3) gusset plate: $\frac{1}{2} \times 10'' \times 16'' \times 0.5'' \times (4) \longrightarrow 45\,lb$

4) plate: $3'' \times 3'' \times 1 \times (2) \longrightarrow 5\,lb$

5) plate: $10'' \times 0.875'' \times 4'' \times (2) \longrightarrow 20\,lb$

6) PIN: $1.775'' \times \frac{1}{4}\pi \times 1.25''^2 \times (2) \rightarrow 1\,lb$

7) socket screws: $3.48'' \times \frac{1}{4}\pi \times 1.5^2 \times (2) \rightarrow 3\,lb$

8) springs: $\frac{1}{4}\pi \times 0.092^2 \times \pi \times 1.75 \times 4 \times (2) \rightarrow 0.08\,lb$

9) flat washer: $\frac{1}{4}\pi (3^2 - 1\frac{9}{16}^2) \times \frac{5}{32}'' \times (2) \rightarrow 0.46\,lb$

10) spherical washers: $\frac{1}{4}\pi (2.875^2 - 1\frac{9}{16}^2) \times \frac{1}{2} \times (2) \rightarrow 1.3\,lb$

11) Bolt $\frac{3}{4}''$: $7''$ long $\times (4) \rightarrow 5\,lb$

Total weight $= 23 + 38 + 45 + 5 + 20 + 1 + 3 + 0.08 + 0.46 + 1.3 + 5$

$= 141.84\,lb$

SUPPORTING LIP WEIGHT

1) tubing 2" x 12" x 0.25" THK

(11.125" x 12) → 42 lb

2) plate: 1" x 2" x 2" x (2) → 2 lb

3) plate: 1" x 2" x 2.1" x (2) → 2 lb

Total weight = 42 + 2 + 2

= 46 lb