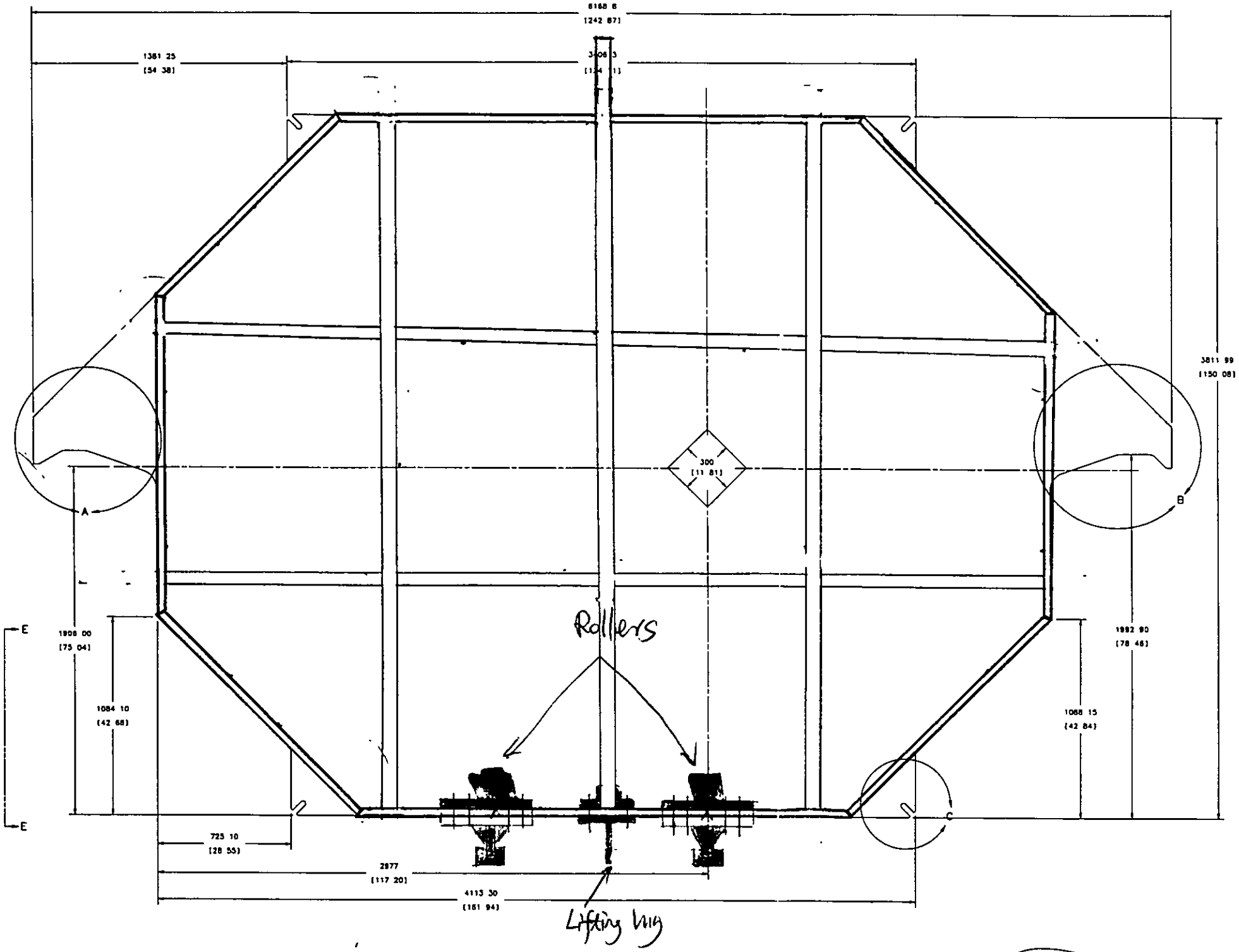

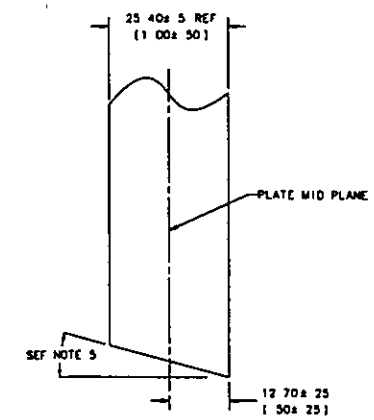

VIEW E-E
SCALE NONE

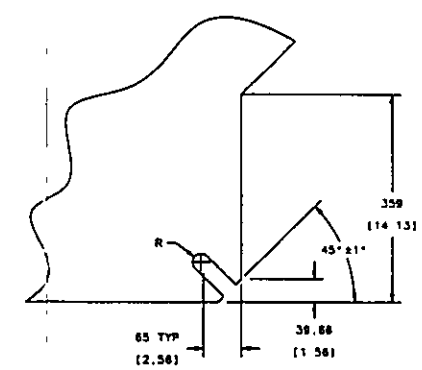

DETAIL C
SCALE: 1/4

9) ALL DIMENSION ARE IN MILLIMETERS AND INCHES.

8) APPROX WEIGHT = 3428 4 Kgms(7555 LBS).

7) FABRICATION AND HANDLING OF PARTS SHALL CONFORM TO FERMILAB SPEC 9218.000-SA-367185. ANY DEVIATION FROM THIS SPECIFICATION SHALL BE SUBMITTED TO FERMILAB FOR PRIOR APPROVAL

6) MATERIAL SHALL CONFORM TO FERMILAB SPEC 9216 000-SA-367184

5) THE ANGLE CAUSED BY THE CUTTING OPERATION IS TO BE MINIMIZED. THIS ANGLE, ONCE DETERMINED BY THE VENDOR IS TO BE CONSISTANT WITHIN ±2° FOR ALL MINOS PLATES

4) ALL DIMENSION ORIGINATE FROM THE PLATE MID PLANE AS DEFINED IN VIEW D-D.

3) BREAK EDGES 0 8-1.5 R OR CHAM.

2) SURFACE TEXTURE DEFINITIONS PER ANSI/ASME B46 1-1995. SURFACE TEXTURE SYMBOLS PER ANSI Y14.36-1978.

1) DIMENSIONING AND TOLERANCING PER ASME Y14 5M-1994.

NOTES, UNLESS OTHERWISE SPECIFIED.

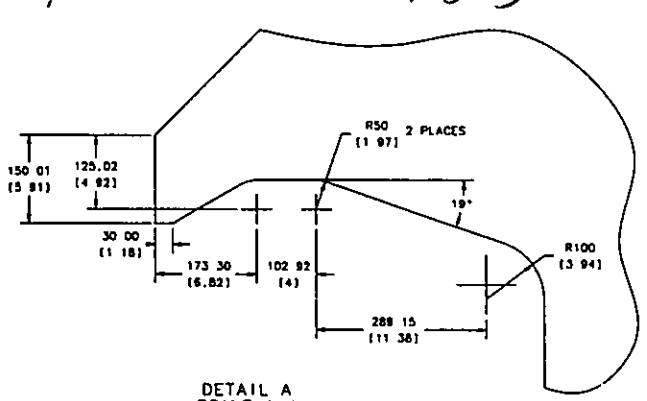

DETAIL A
SCALE 1/4

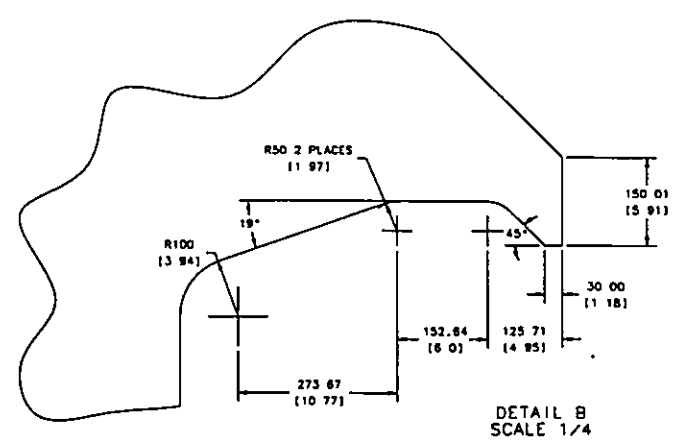

DETAIL B
SCALE 1/4

ITEM NO	PART NO	DESCRIPTION OR SIZE	QTY REQ

PARTS LIST

UNLESS OTHERWISE SPECIFIED	DESIGNED	JIM KILMER 5/98
	DRAWN	TINA KUBICKA 5/27/98
	CHECKED	
	APPROVED	
	ISSUED ON	

1 BREAK ALL SHARP EDGES .010 MIN.
2 ALL SURFACE TEXTURE PER ANSI B46.1 UNLESS OTHERWISE SPECIFIED.
3 ALL DIMENSIONS PER ANSI Y14.5M-1982
4 ALL DIMENSIONS ARE IN INCHES.

250/ ALL REMAINING SURFACES

MATERIAL: 1" THICK SAE 1006 LOW CARBON STEEL

FERMI NATIONAL ACCELERATOR LABORATORY
UNITED STATES DEPARTMENT OF ENERGY

PPD/MECHANICAL SUPPORT
MINOS
NEAR DETECTOR STEEL

SCALE 1/8 & NOTED | DRAWING NUMBER 9213.300-ME-367179 | SHEET NO. 1 OF 1 | REV

SEP 1998

DESIGN ROLLER PIVOT WELDMENT

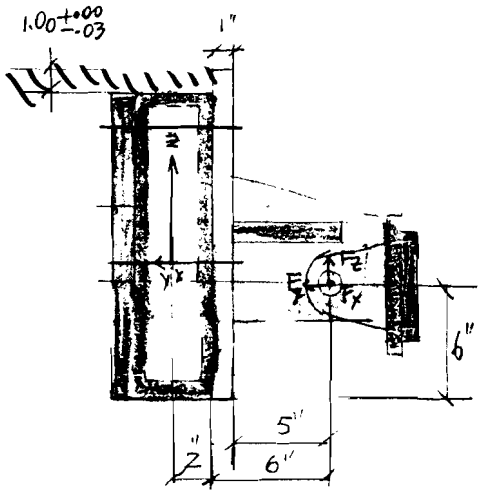

From Ansys results, taking the worst loading combination at Elements 59 & 68 one:

Element 59-0° $F_x = 16847$ lb

Element 59-0° $F_y = 3166.2$ lb

Element 68-90° $F_z = 1848$ lb

Element 59-90° $M_x = 1271.9$ lb-in

Element 59-90° $M_y = 65795$ lb-in

Element 68-0° $M_z = 18258$ lb-in

Moment due to eccentricities of the pivot weldment

$$M_{x_1} = F_z \times (2+6) = 1848 \times 8 = 14784 \text{ lb-in}$$

$$M_x = M_{x_1} = 14784 \text{ lb-in}$$

$$M_z = F_x \times (2+6) = 16847 \times 8 = 134776 \text{ lb-in}$$

[redacted]SIGN THE CONNECTION

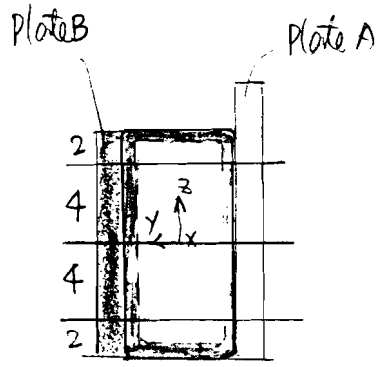

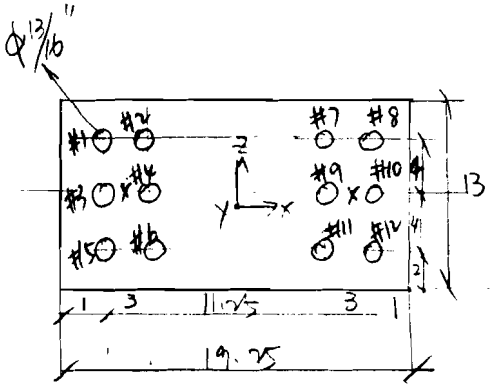

PLATE A 1"x13"x19.25" A36

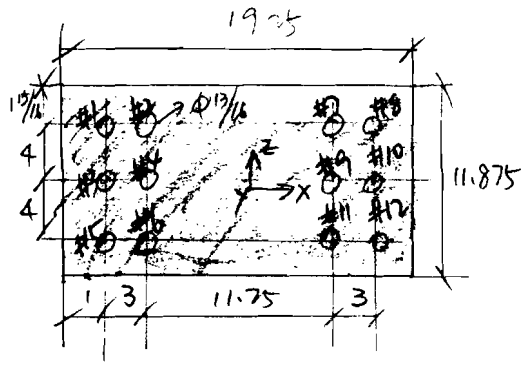

PLATE B 1"x11.875"x19.25 A36

Knowing:

$F_x = 1684.7$ lb

$F_y = 3166.2$ lb

$F_z = 1848$ lb

$M_x = 14784$ lb-in

$M_z = 13477.6$ lb-in

Therefore,

shear in x-direction = 1684.7 lb

Tension in y-direction = 3166.2 lb

shear in z-direction = 1848 lb

Tension on top bolts caused by M_x

$$\frac{14784}{8} = 1848 \text{ lb}$$

Compression on the bottom bolts caused by M_x

$$\frac{14784}{8} = 1848 \text{ lb}$$

Tension on the left bolts caused by M_z

$$\frac{13477.6}{11.25 + (\frac{3}{2}) \times 2} = 945.8 \text{ lb}$$

Compression on the right side bolts

$$\frac{13477.6}{11.25 + (3/2) \times 2} = 945.8 \text{ lb}$$

Therefore:

- The resultant shear in x-z plane:

$$\sqrt{1684.7^2 + 1848^2} = 2501 \text{ lb}$$

- Combined Tension/compression on Bolt #1

$$\left(\tfrac{1}{12} \times 3166.2\right) + \left(\tfrac{1}{4} \times 1848\right) + \left(\tfrac{1}{6} \times 945.8\right) = 883 \text{ lb}$$

- Combined Tension/compression on Bolt #2

$$\left(\tfrac{1}{12} \times 3166.2\right) + \left(\tfrac{1}{4} \times 1848\right) + \left(\tfrac{1}{6} \times 945.8\right) = 883 \text{ lb}$$

- Combined Tension/compression on Bolt #3

$$\left(\tfrac{1}{12} \times 3166.2\right) + \left(\tfrac{1}{6} \times 945.8\right) = 421 \text{ lb}$$

- Combined Tension/compression on Bolt #4

$$\left(\tfrac{1}{12} \times 3166.2\right) + \left(\tfrac{1}{6} \times 945.8\right) = 421 \text{ lb}$$

- Combined Tension/compression on Bolt #5

$$\left(\tfrac{1}{12} \times 3166.2\right) - \left(\tfrac{1}{4} \times 1848\right) + \left(\tfrac{1}{6} \times 945.8\right) = -40.5 \text{ lb}$$

- Combined Tension/compression on Bolt #6

$$\left(\tfrac{1}{12} \times 3166.2\right) - \left(\tfrac{1}{4} \times 1848\right) + \left(\tfrac{1}{6} \times 945.8\right) = -40.5 \text{ lb}$$

- Combined Tension/compression on Bolt #7

$$\left(\tfrac{1}{12} \times 3166.2\right) + \left(\tfrac{1}{4} \times 1848\right) - \left(\tfrac{1}{6} \times 945.8\right) = 568 \text{ lb}$$

- Combined Tension/compression on Bolt #8

$$\left(\tfrac{1}{12} \times 3166.2\right) + \left(\tfrac{1}{4} \times 1848\right) - \left(\tfrac{1}{6} \times 945.8\right) = 568 \text{ lb}$$

- Combined Tension/compression on Bolt #9

$$\left(\tfrac{1}{12} \times 3166.2\right) - \left(\tfrac{1}{6} \times 945.8\right) = 106.2 \text{ lb}$$

- Combined Tension/compression on Bolt #10

$$\left(\tfrac{1}{12} \times 3166.2\right) - \left(\tfrac{1}{6} \times 945.8\right) = 106.2 \text{ lb}$$

- Combined Tension / compression on Bolt #11

$$\left(\frac{1}{12}\times 3166.2\right)-\left(\frac{1}{4}\times 1848\right)-\left(\frac{1}{6}\times 945.8\right) = -355.7 \text{ lb}$$

- Combined Tension / compression on Bolt #12

$$\left(\frac{1}{12}\times 3166.2\right)-\left(\frac{1}{4}\times 1848\right)-\left(\frac{1}{6}\times 945.8\right) = -355.7 \text{ lb}$$

Bolts #1 & #2 are critical because they carry the larger tension.

- shear per bolt:

$$\frac{2501}{12} = 208.4 \text{ lb}.$$

o FIND THE ALLOWABLE SHEAR STRESS ON THE BOLT F_v (ksi)

From Table J3.2, AISC, ASD, page 5-73, showing:
When connection in the bearing type and threads in the shear plane:

$$F_v = 21 \text{ ksi} \text{ — governs}$$

According to ANSI/ASME, B30.20-1993, Below the Hook Lifting Devices, showing.

$$F_v = \frac{1}{3}F_y \quad \text{where } F_y = 92 \text{ ksi for A325}$$

$$F_v = \frac{1}{3}\times 92 = 30.6 \text{ ksi}$$

o FIND THE COMPUTED SHEAR STRESS f_v (ksi)

$$f_v = \frac{V}{A} \quad \text{where } V = 208.4 \text{ lb}$$
$$A = 0.4418 \text{ for A325 } 3/4\text{" dia Bolt}$$

$$f_v = \frac{208.4}{0.4418}$$
$$= 0.471 \text{ ksi}$$

- FIND THE SAFETY FACTOR ON SHEAR STRESS

$f_v = 0.471 \text{ ksi}$

$F_v = 21 \text{ ksi}$

$$SF = \frac{F_v}{f_v} = \frac{21}{0.471} = 44.6$$

- FIND THE ALLOWABLE TENSILE STRESS F_t (ksi)

According to Table 3.3, AISC, ASD, page 5-74, knowing, when the connection is bearing type and the threads in the shear plane.

$$F_t = \sqrt{(44)^2 - 4.39 f_v^2} \quad \text{where } f_v = 0.471 \text{ ksi}$$

$$F_t = \sqrt{44^2 - 4.39 \times 0.471^2} = 43.9 \text{ ksi}$$

According to ANSI/ASME, B30.20-1993 Below the Hook Lifting Device, knowing:

$$F_t = \frac{1}{3} F_y \quad \text{where } F_y = 92 \text{ ksi for A325}$$

$$= \frac{1}{3} \times 92 = 30.6 \text{ — governs}$$

- FIND THE COMPUTED TENSILE STRESS f_t (ksi)

$$f_t = \frac{P}{A} \quad \text{where } P = 883 \text{ lb} \quad A = 0.4418 \text{ in}^2$$

$$f_t = \frac{883}{0.4418} = 1.999 \text{ ksi}$$

- FIND THE SAFETY FACTOR ON TENSILE STRESS

$F_t = 30.6 \text{ ksi} \quad f_t = 1.999 \text{ ksi}$

$$SF = \frac{F_t}{f_t} = \frac{30.6}{1.999} = 15.3$$

O FIND THE BOLT BEARING STRESS ON CONNECTING MATERIAL Fp (ksi)

For tubing 12x4

$t = 0.3125$ in

From Table 1-E, AISC, ASD, page 4-6

when $t = 0.3125$, Bearing allowable load per bolt

$52.2 \times 0.3125 = 16.3$ kips

$$F_p = \frac{16.3125}{0.3125 \times 0.75} = 69.6 \text{ ksi}$$

For plates,

$t = 1 \times 2 = 2$ in

From Table 1-E, AISC, ASD, page 4-6

when $t = 2$ in, Bearing allowable load per bolt

$52.2 \times 2 = 104.4$ kips

$$F_p = \frac{104.4}{0.75 \times 2} = 69.6 \text{ ksi}$$

According to ANSI/ASME B30.20-1985 Below the Hook Lifting Devices

$F_p = \frac{1}{3} F_y$ where $F_y = 36$ ksi for A36

$F_p = \frac{1}{3} \times 36 = 12$ ksi —— governs

o FIND THE COMPUTED BOLT BEARING STRESS ON CONNECTING MATERIAL f_p (ksi)

For tubing 12x4,

$$f_p = \frac{P/n}{dt}$$

" STRUCTURAL STEEL DESIGN" chapter 18, page 596

Where n — number of the fastener
d — nominal fastener diameter
t — thickness of the material

Knowing: P = 2501 lb
n = 12
d = 0.75 in
t = 0.625 in

$$f_p = \frac{2501/12}{0.75 \times 0.625} = 0.445 \text{ ksi}$$ — governs

For plates,

$$f_p = \frac{P/n}{dt}$$

where P = 2501 lb
n = 12
d = 0.75 in
t = 2 in

$$f_p = \frac{2501/12}{0.75 \times 2} = 0.139 \text{ ksi}$$

O FIND THE SAFETY FACTOR ON BOLT BEARING STRESS

$f_p = 0.445$ ksi

$F_p = 12$ ksi

$$SF = \frac{12}{0.445} = 26.9$$

O FIND THE ALLOWABLE SHEAR STRESS ON THE NET AREA OF THE CONNECTION PLATE R_v (ksi)

According to AISC, ASD, J4 page 4-10 for single plate

$R_v = 0.3\,F_u$ where $F_u = 58$ ksi for A36

$R_v = 0.3 \times 58 = 17.4$ ksi

According to ANSI/ASME B30.20-1985 Below the Hook Lifting Devices

$R_v = \frac{1}{3} F_y$ where $F_y = 36$ ksi for A36

$R_v = \frac{1}{3} \times 36 = 12$ ksi ——— governs

O FIND THE COMPUTED SHEAR STRESS ON THE NET AREA OF THE CONNECTION PLATE γ_v (ksi)

For single plate,

shear force $= \frac{1}{2} \times 2501 = 1250.5$ lb

net area $= t\,[L - n(d + \frac{1}{16})]$

$= 1 \times [11.875 - 3(0.75 + 0.0625)]$

$= 9.4375$ in^2

$$\gamma_v = \frac{1250.5}{9.4375} = 0.133 \text{ ksi}$$

o FIND THE SAFETY FACTOR ON SHEAR STRESS ON THE NET AREA OF THE CONNECTION PLATE:

$$\gamma_v = 0.133 \text{ ksi}$$

$$R_v = 12 \text{ ksi}$$

$$SF = \frac{R_v}{\gamma_v} = \frac{12}{0.133} = 90$$

—CHECK THE DEFLECTION IN Y-direction

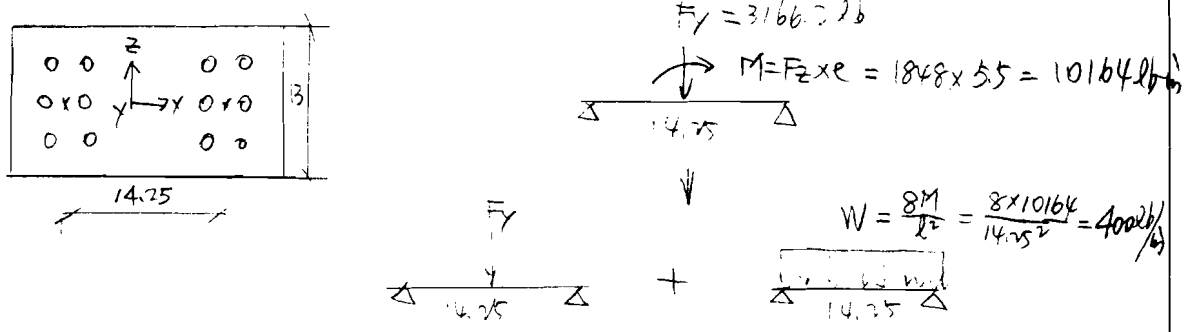

According to AISC, ASD, BEAM DIAGRAMS AND FORMULAS, page 2-298, showing, Simple beam with concentrated load at center, The maximum deflection at center is

$$\Delta_{max} = \frac{Pl^3}{48EI}$$

where $P = 3166.2$ lb

$l = 14.25$ in

$$I = \frac{bd^3}{12} = \frac{13 \times 1^3}{12} = 1.083 \text{ in}^4$$

$$\Delta_{max} = \frac{3166.2 \times 14.25^3}{48 \times 29 \times 10^6 \times 1.083} = 0.006 \text{ in}$$

According to AISC, ASD, BEAM DIAGRAMS & FORMULAS, page 2-296, knowing, simple beam with uniformly distributed load the maximum deflection at center is

$$\Delta_{max}' = \frac{5wl^4}{384EI}$$

where $w = 400\ lb/in$

$l = 14.25\ in$

$I = 1.083\ in^4$

$$\Delta_{max}' = \frac{5 \times 400 \times 14.25^4}{384 \times 29 \times 10^6 \times 1.083}$$

$$= 0.0068\ in$$

therefore, the total deflection will be

$$\Delta = \Delta_{max} + \Delta_{max}'$$

where $\Delta_{max} = 0.0061\ in$

$\Delta_{max}' = 0.0068\ in$

$$\Delta = 0.0061 + 0.0068$$

$$= 0.0129\ in$$

the allowable deflection

$$\frac{l}{480} = \frac{14.25}{480} = 0.0296\ in.$$

$$SF = \frac{0.0296}{0.0129} = 2.3$$

[redacted] THE DEFLECTION ON SIDE WALL OF 12x4 TUBING

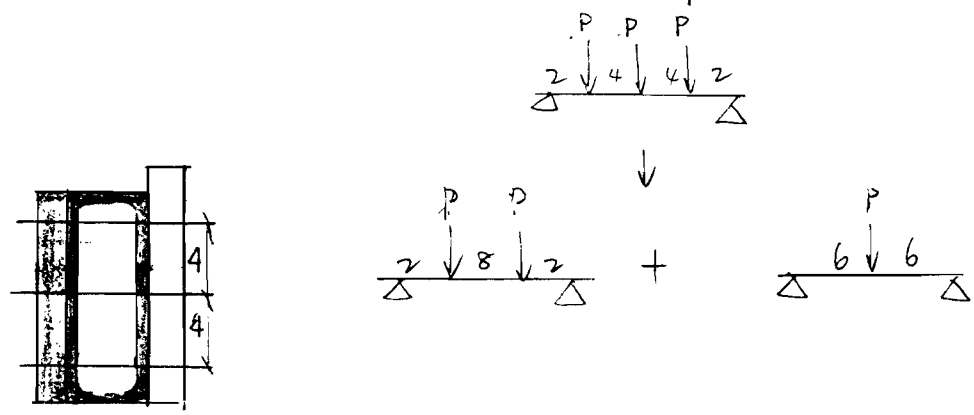

From previous study, knowing: $P = 883$ lb

According to AISC, ASD, Beam Diagram, page 2-298, knowing, the maximum deflection at center with two equal concentrated loads symmetrically placed is,

$$\Delta_{max} = \frac{Pa}{24EI}(3l^2 - 4a^2)$$

where $P = P = 883$ lb

$a = 2$ in

$E = 29 \times 10^6$

$I = \frac{bh^3}{12} = \frac{(4)\times(0.375^3 + 1^3)}{12} = 0.343 \text{ in}^4$

$l = 12$ in

$$\Delta_{max} = \frac{883 \times 2}{24 \times 29 \times 10^6 \times 0.343}(3 \times 12^2 - 4 \times 2^2)$$

$$= 0.0031 \text{ in}$$

According to AISC, ASD, Beam Diagram & Formulas, page 2-298, knowing, the maximum deflection at center with concentrated load is.

$$\Delta max' = \frac{P l^3}{48 E I}$$

where $P = P = 883$ lb

$l = 12$ in

$E = 29 \times 10^6$

$$I = \frac{bh^3}{12} = \frac{(\ \ )\times(0.3125^3 + 1^3)}{12}$$

$= 0.343$ in

$$\Delta max' = \frac{883 \times 12^3}{48 \times 29 \times 10^6 \times 0.343} = 0.0032 \text{ in}$$

Therefore, the total deflection at center is

$$\Delta = \Delta max + \Delta max'$$

where $\Delta max = 0.0031$ in

$\Delta max' = 0.0032$ in

$$\Delta = 0.0031 + 0.0032 = 0.0063 \text{ in}$$

The allowable deflection is

$$\frac{l}{180} = \frac{12}{180} = 0.067 \text{ in}$$

$$SF = \frac{0.067}{0.0063} = 1.06$$

Therefore, the sketch shown is acceptable.

[redacted] THE ASSEMBLING [redacted]

- Bolt: 3/4-10 UNC-2A TYPE 1 (medium carbon steel)
  HEX HEIGHT 1/2"
- Nut: A194 for grade 2 for bolt 3/4" dia, hardened.
  HEAVY HEX NUT HEIGHT 3/4"
- washer: F436 hardened for Bolt 3/4" dia, flat.
  washer Height: 5/32"

Bolt length = total thickness of all connected material + Grip + washer

$= (1+4+1) + (1) + (5/32)$

$= 7.156$ in

↳ use 7 1/2 in

3/4-10-UNC 2A × 7 1/2 LONG ×24 (each)

- FIND THE DESIRED CLAMPING FORCE / TORQUE:

According to suggested assembly torque value for Bolt 3/4". A325 to produce corresponding Bolt load, knowing the clamping load is 21300 lb.

Therefore, the required the torque needs to be investigated

From previous study, knowing:

$$\Delta = \Delta_{max} + \Delta_{max}'$$

where $\Delta = \frac{l}{180}$ where $l = 12$ in

$$\Delta = \frac{12}{180} = 0.067 \text{ in}.$$

$$\Delta_{max} = \frac{Pa}{24EI}(3l^2 - 4a^2)$$

where P = Bolt load

$a = 2$ in

$E = 29 \times 10^6$

$I = 0.343 \text{ in}^4$

$l = 12$ in

$$= \frac{P \times 2}{24 \times 29 \times 10^6 \times 0.343}(3 \times 12^2 - 4 \times 2^2)$$

$$= 3.485 \times 10^{-6} P$$

$$\Delta_{max}' = \frac{Pl^3}{48EI}$$

where $P = p$ $\quad$ P – Bolt load

$l = 12$ in

$E = 29 \times 10^6$

$I = 0.343$ in^4

$$\Delta_{max}' = \frac{p \times 12^3}{48 \times 29 \times 10^6 \times 0.343} = 3.619p \times 10^{-6}$$

Therefore,

$$\Delta = \Delta_{max}' + \Delta_{max}$$

where $\Delta = 0.067$ in

$\Delta_{max}' = 3.485p \times 10^{-6}$

$\Delta_{max} = 3.619 \times 10^{-6} p$

$$0.067 = 3.485p \times 10^{-6} + 3.619 \times 10^{-6} p$$

$$p' = \frac{0.067}{(3.485 + 3.619) \times 10^{-6}}$$

$$= 9431 \text{ lb} > 8983 \text{ lb} \doteq 883 \text{ lb}$$

use 8983 lb clamping force.

According to "Design of machine Elements" chapter 5, page 276 knowing, Torque required to produce desired clamping force is equal to

$T = 0.195\, dw$ for unplated & uncoated A325 Bolt

where d = nominal diameter of the Bolt
$= 0.75$ in

W = clamping force $= 8983$ lb

therefore,

$$T = 0.195\, dw$$
$$= 0.195 \times 0.75 \times 8983$$
$$= 1314 \text{ lb-in.}$$

In conclusion, the desired torque applied on the connections mentioned above is 1314 lb-in

[redacted] THE TUBING WITH ADDITIONAL MOMENT DUE TO THE PIVOT WELDMENT

the combined the loading at element 59 & 68 are

$F_x = 16847$ lb (compression)

$F_x = 3166.2$ lb (shear in y-direction)

$F_z = 1848$ lb (shear in z-direction)

$M_x = 1271.9 + 14784 = 16055.9$ lb-in (Torsion)

$M_y = 65795$ lb-in (strong axis bending)

$M_z = 18258 + 13477.6 = 31735.6$ lb-in (weak axis bending)

○ FIND THE COMPUTED AXIAL STRESS f_a (ksi)

$f_a = \frac{P}{A}$ where $P = 16847$ lb

$A = 9.36$ in^2

$f_a = \frac{16847}{9.36} = 0.180$ ksi

From the section A, page 13, knowing the allowable is 15.33ksi

therefore, the safety factor is equal to.

$$SF = \frac{15.33}{0.180} = 85.2$$

- FIND THE COMPUTED BENDING STRESS IN STRONG AXIS f_{bx} (ksi)

$$f_{bx} = \frac{M}{S_x} \quad \text{where} \quad M = M_y = 65795 \text{ lb-in}$$
$$S_x = 25.5 \text{ in}^3$$

$$f_{bx} = \frac{65795}{25.5} = 2.580 \text{ ksi}$$

From the section A, page 18, bracing, the allowable is 15.33 ksi

- FIND THE COMPUTED BENDING STRESS IN WEAK AXIS f_{by} (ksi)

$$f_{by} = \frac{M}{S_y} \quad \text{where} \quad M = M_z = 31735.6 \text{ lb-in}$$
$$S_y = 13.3 \text{ in}^3$$

$$f_{by} = \frac{31735.6}{13.3} = 2.386 \text{ ksi}$$

From the section A, page 18, bracing, the allowable is 15.33 ksi

- FIND THE COMBINED STRESSES

According to H1, AISC, ASD, page 5-54, bracing

when $\frac{f_a}{F_a} = \frac{0.180}{15.33} = 0.012 \leq 0.15$

EQ (H1-3) is permitted.

Therefore,

$$\frac{f_a}{F_a} + \frac{f_{bx}}{F_{bx}} + \frac{f_{by}}{F_{by}} \leq 1.0 \qquad \text{(EQ H1-3)}$$

Where $f_a = 0.180$ ksi

$F_a = 15.33$ ksi

$f_{bx} = 2.580$ ksi

$F_{bx} = 15.33$ ksi

$f_{by} = 2.386$ ksi

$F_{by} = 15.33$ ksi

$$\frac{0.180}{15.33} + \frac{2.580}{15.33} + \frac{2.386}{15.33} = 0.34 \leq 1.0.$$

$$SF = \frac{1.0}{0.34} = 2.9.$$

the member is adequate enough to carry the additional moments due to the pivot weldment

— FIND THE COMPUTED SHEAR STRESS f_v (ksi)

o St Venant torsion:

$$f_s = \frac{T}{2bht} \quad \text{where } T = 16055.9 \text{ lb-in}$$

$b = 4$ in

$h = 12$ in

$t = 0.3125$ in

$$f_s = \frac{16055.9}{2 \times 4 \times 12 \times 0.3125} = 0.535 \text{ ksi}$$

o shear force in y-direction:

$$f_{vy} = \frac{V_y}{A} \quad \text{where } V_y = 3166.2 \text{ lb}$$

$A = 9.36$ in^2

$$f_{vy} = \frac{3166.2}{9.36} = 0.338 \text{ ksi}$$

o shear force in z-direction:

$$f_{vz} = \frac{V_z}{A} \quad \text{where } V_z = 1848 \text{ lb}$$

$A = 9.36$ in

$$f_{vz} = \frac{1848}{9.36} = 0.197 \text{ ksi}$$

- combined shear in y-direction:

$$f_y = f_s + f_{vy} \qquad \text{where } f_s = 0.535 \text{ ksi}, \quad f_{vy} = 0.338 \text{ ksi}$$

$$f_y = 0.535 + 0.338 = 0.873 \text{ ksi}$$

- combined shear in z-direction:

$$f_z = f_s + f_{vz} \qquad \text{where } f_s = 0.535 \text{ ksi}, \quad f_{vz} = 0.197 \text{ ksi}$$

$$f_z = 0.535 + 0.197 = 0.732 \text{ ksi}$$

- The resultant shear stress f_v (ksi)

$$f_v = \sqrt{f_z^2 + f_y^2} \qquad \text{where } f_z = 0.732 \text{ ksi}, \quad f_y = 0.873 \text{ ksi}$$

$$f_v = \sqrt{0.732^2 + 0.873^2}$$

$$= 1.139 \text{ ksi}$$

From the section A, page 20, showing the allowable stress is equal to 15.33 ksi. therefore, the safety Factor is equal to:

$$SF = \frac{15.33}{1.139} = 13.5.$$

In conclusion, the member is adequate to carry the additional load due to the eccentricity of the pivot weldment.

DESIGN ROLLER PIVOT WELDMENT

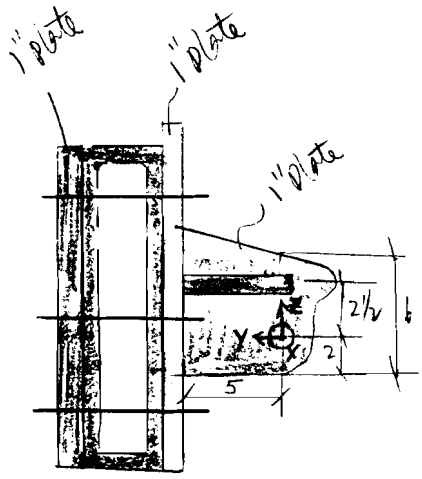

From previous study, knowing:

$F_x = 1684.7$ lb

$F_y = 3166.2$ lb

$F_z = 1848$ lb

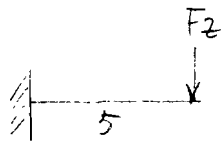

Strong axis bending

$M = F_z \times 5 = 1848 \times 5 = 9240$ lb-in

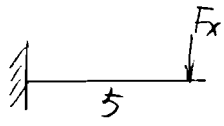

Weak axis bending (for gussets only)

$M = F_x \times 5 = 1684.7 \times 5 = 8423.5$ lb-in

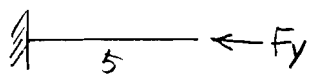

Compression

$F = 3166.2$ lb

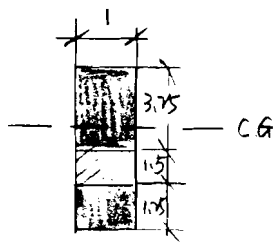

A	X	Y	AX	AY
3.75	0.5	4.375	1.875	14.22
1.25	0.5	0.625	0.625	0.78

$$\bar{X} = \frac{\Sigma AY}{\Sigma A} = \frac{2.5}{4.5} = 0.5 \text{ in}$$

$$\bar{Y} = \frac{\Sigma AX}{\Sigma A} = \frac{15}{4.5} = 3.3 \text{ in}$$

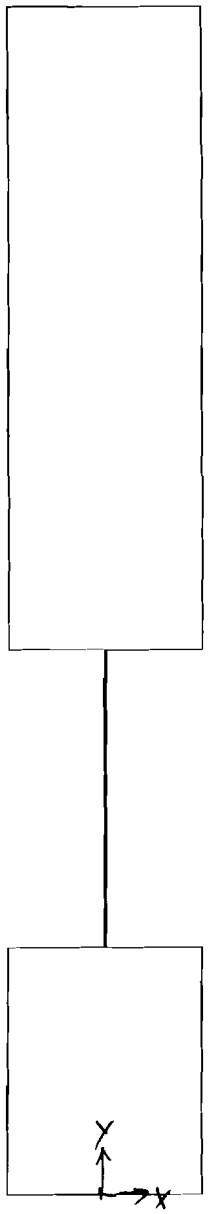

Area=4.52e+00
Xcg=2.46e-17
Ycg=3.33e+00
Ixcg=1.57e+01
Iycg=3.75e-01
Ixycg=1.64e-15
Ixor=6.58e+01
Iyor=3.75e-01
Ixyor=1.78e-15
Kxcg=1.87e+00
Kycg=2.88e-01
Kxor=3.82e+00
Kyor=2.88e-01
Ixprin=3.75e-01
Iyprin=1.57e+01
Ipolar=1.61e+01

[redacted] CHECK THE PLATE UNDER COMBINED STRESSES

[redacted]

$f_{bx} = \frac{M}{S_x}$ where $M = 9240$ lb-in

$S_x = \frac{I_x}{y}$ where $y_1 = 3.33$ in – governs

$y_2 = 6.00 - 3.33$

$= 2.67$ in

$I_x = 15.7$ in^4

$S_x = \frac{15.7}{3.33} = 4.715$ in^3

$f_{bx} = \frac{9240}{4.715} = 1.960$ ksi

from the previous study, knowing $F_{bx} = 12$ ksi

ϕ Axial compression

$f_a = \frac{P}{A}$ where $P = 3166.2$ lb

$A = 4.52$ in^2

$f_a = \frac{3166.2}{4.52} = 0.700$ ksi

– find Width-Thickness Ratios for Compression Elements

According to AISC, ASD. Table B5.1, page 5-36.

for plates projecting from rolled beams or columns.

$$\frac{b}{t} = \frac{6.00}{1} = 6.00.$$

$$\frac{95}{\sqrt{F_y}} = \frac{95}{\sqrt{36}} = 15.83.$$

$$\frac{b}{t} < \frac{95}{\sqrt{F_y}} \rightarrow \text{non-compact section}$$

According to E2, AISC, ASD, page 5-42,

$\frac{Kl}{r}$ where $K = 2$
$r = 0.288$ in
$l = 8$ in

$$\frac{Kl}{r} = \frac{2 \times 8}{0.288} = 55.55.$$

According to AISC, ASD, page 5-120, C_c is the column slenderness ratio, for A36.

$C_c = 126.1$

therefore $\frac{Kl}{r} < C_c$

The allowable stress is permitted under EQ (E2.1)

$$F_a = \frac{\left[1 - \frac{(Kl/r)^2}{2C_c^2}\right]F_y}{\frac{5}{3} + \frac{3(Kl/r)}{8C_c} - \frac{(Kl/r)^3}{8C_c^3}}$$ — E2.1, AISC, ASD, page 5-42.

Where $C_c = 126.1$

$\frac{Kl}{r} = 55.55.$

$$F_a = \frac{\left[1 - \frac{55.55^2}{2 \times 126.1^2}\right] \times 36}{\frac{5}{3} + \frac{3 \times 55.55}{8 \times 126.1} - \frac{55.55^3}{8 \times 126.1^3}} = 17.849 \text{ (ksi)}$$

According to ANSI/ASME, B30.20-1993, Below the Hook Lifting Device, knowing:

$F_a = \frac{1}{3} F_y$ where $F_y = 36$ ksi for A36

$F_a = \frac{1}{3} \times 36 = 12$ ksi — governs

— FIND THE COMBINED STRESSES.

According to H1, AISC, ASD, page 5-54, knowing

When $\frac{f_a}{F_a} = \frac{0.700}{12} = 0.058 \leq 0.15$.

EQ (H1-3) is permitted

Therefore,

$$\frac{f_a}{F_a} + \frac{f_{bx}}{F_{bx}} + \frac{f_{by}}{F_{by}} \leq 1.0.$$

Where $f_a = 0.700$ ksi

$F_a = 12$ ksi

$f_{bx} = 1.960$ ksi

$F_{bx} = 12$ ksi

$$\frac{0.700}{12} + \frac{1.960}{12} = 0.22 < 1.0.$$

$$SF = \frac{1.0}{0.22} = 4.5$$

OK The plate is accurate to take the load

[redacted] BEARING STRESS ON CONTACT POINT

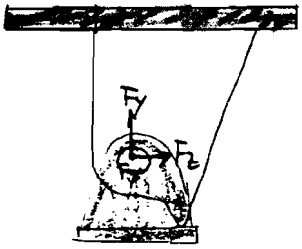

From previous study, Running $F_y = 3166.2\,lb$

The allowable Bearing Stress is 12ksi.

$$F_b = \frac{P}{A} \quad \text{where } F_b = 12\,ksi$$

$$P = F_y = 3166.2\,lb$$

$$A = \frac{P}{F_b} = \frac{3166.2}{12000} = 0.264\,in^2$$

$$A = b \times d. \quad \text{where } b = 1\,in$$

$$d = \frac{A}{b} = \frac{0.264}{1} = 0.264\,in.$$

use 0.5 in

Therefore: the following change is necessary

$$SF = \frac{0.5}{0.264} = 1.9$$

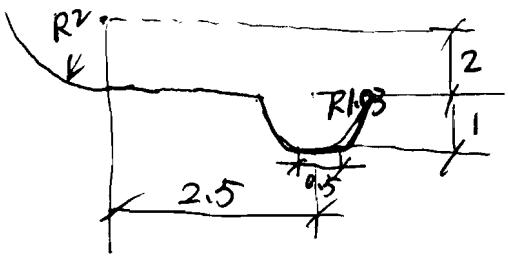

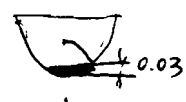

machine off 0.03"

CHECK THE BEARING STRESS ON PIN HOLE

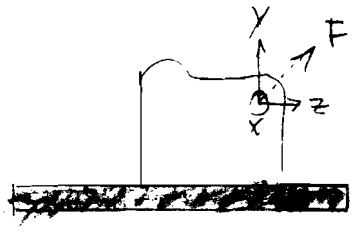

From the previous study, known

$F_Y = 3166.2$ lb

$F_Z = 1848$ lb.

therefore, the resultant F

$$F = \sqrt{F_Y^2 + F_Z^2}$$

$$= \sqrt{3166.2^2 + 1848^2} = 3666 \text{ lb}$$

$$F_P = \frac{F}{A}$$ where $F = 3666$ lb

$A = 1.0 \times 1.5 = 1.5 \text{ in}^2$

$$F_P = \frac{3666}{1.5} = 2.44 \text{ ksi}$$

known, the allowable bearing stress is 12ksi

therefore, the safety factor is

$$SF = \frac{12}{2.44} = 4.9$$

[redacted]

1). STARTING POINT:

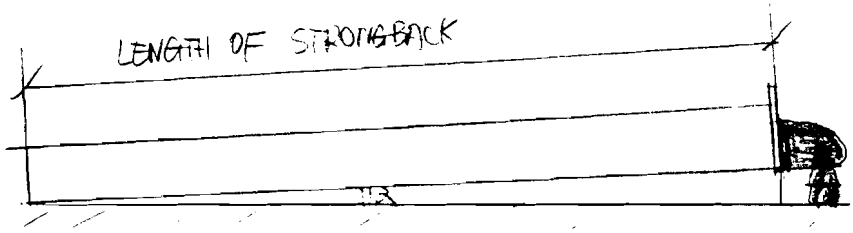

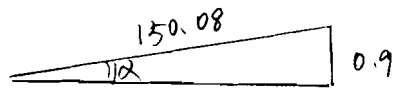

$$\sin\alpha = \frac{0.9}{150.08} = 0.0599$$

$$\alpha = 0.34^\circ$$

The drawing attached below shows when α increases up to 8.7°, the bracket will start interfere with the others.

2). VERTICAL POSITION:

The drawing shows the bracket is clear.

In conclusion, the design is accurate for this application

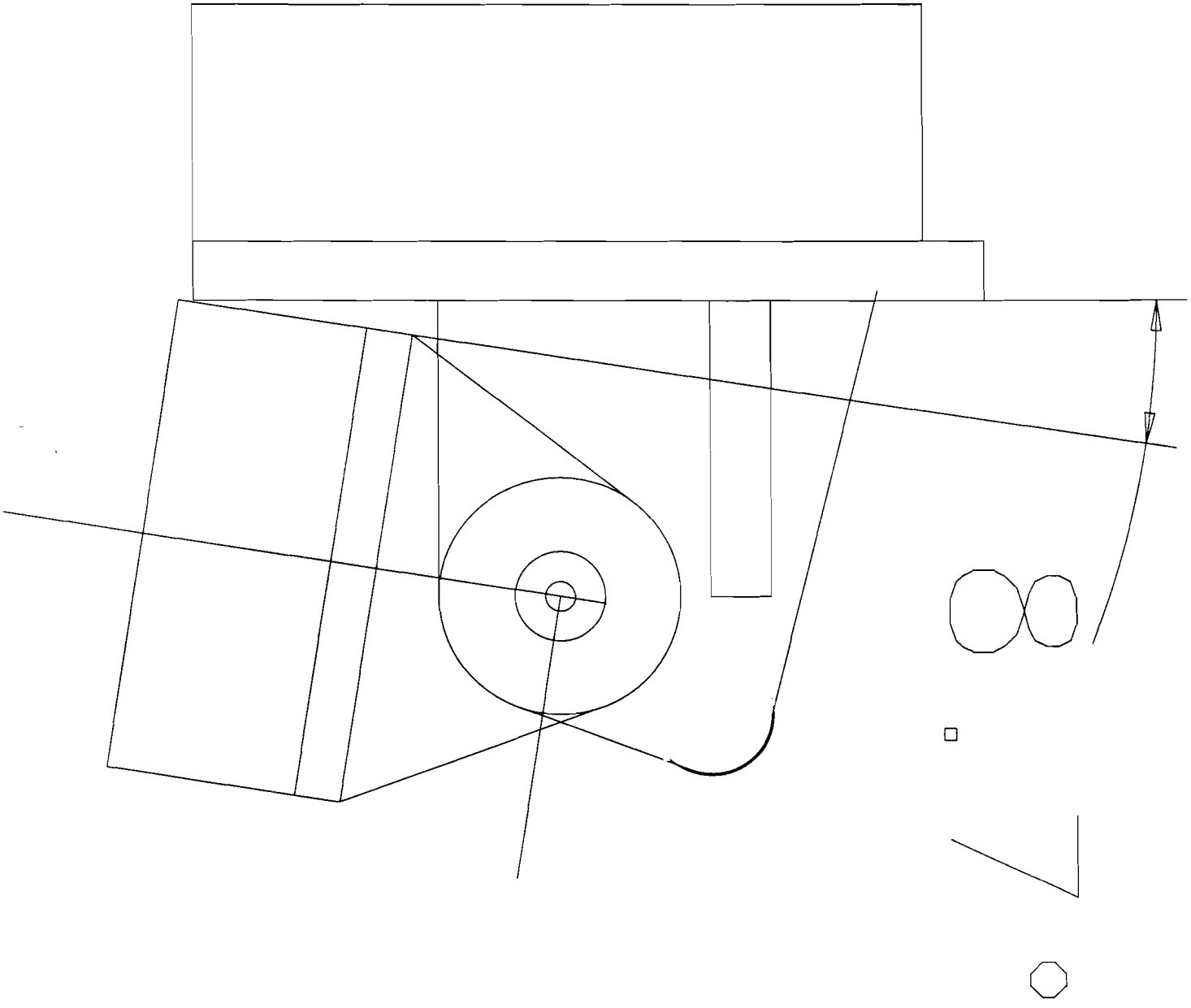

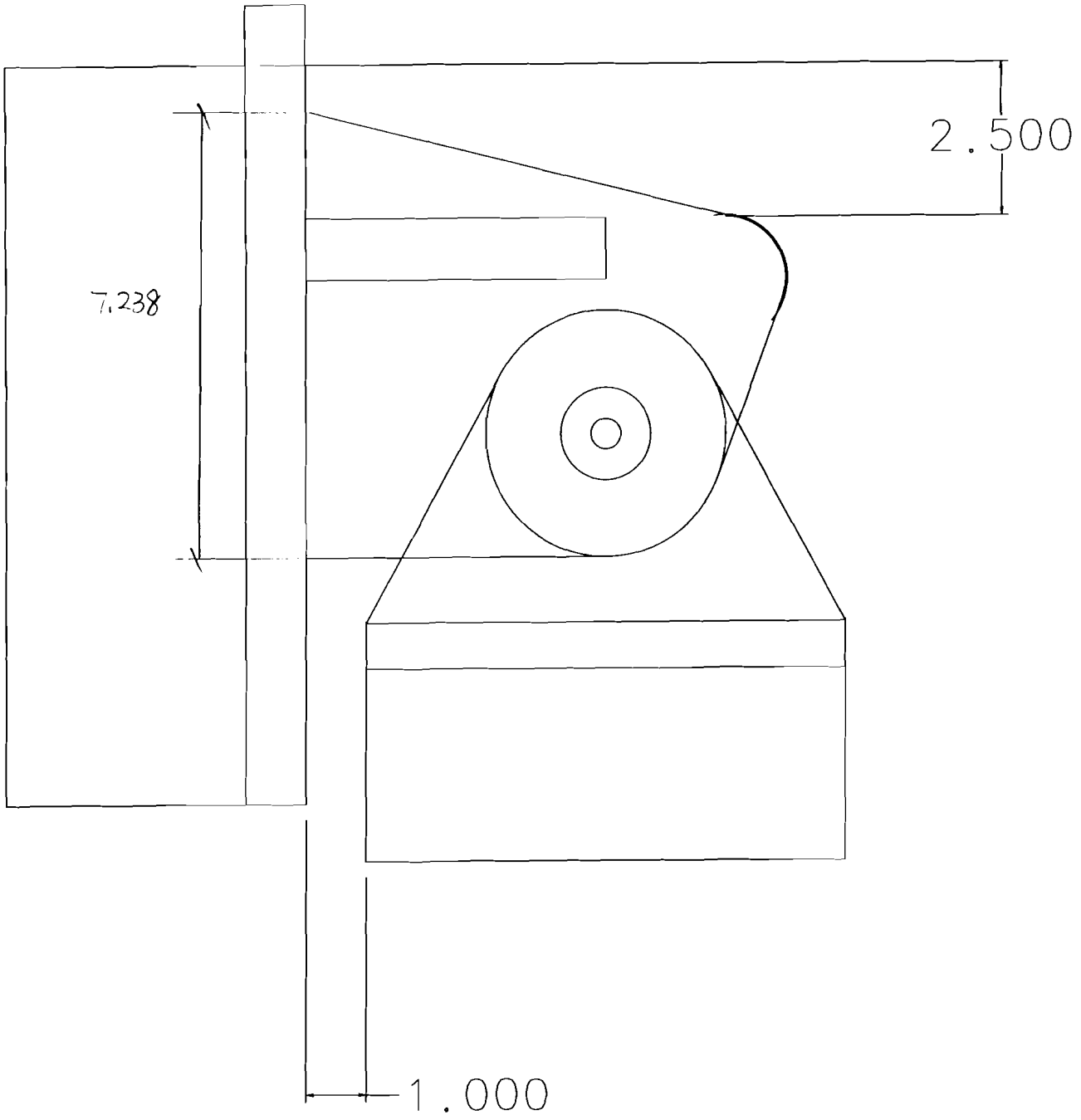
2.500
7.238
1.000

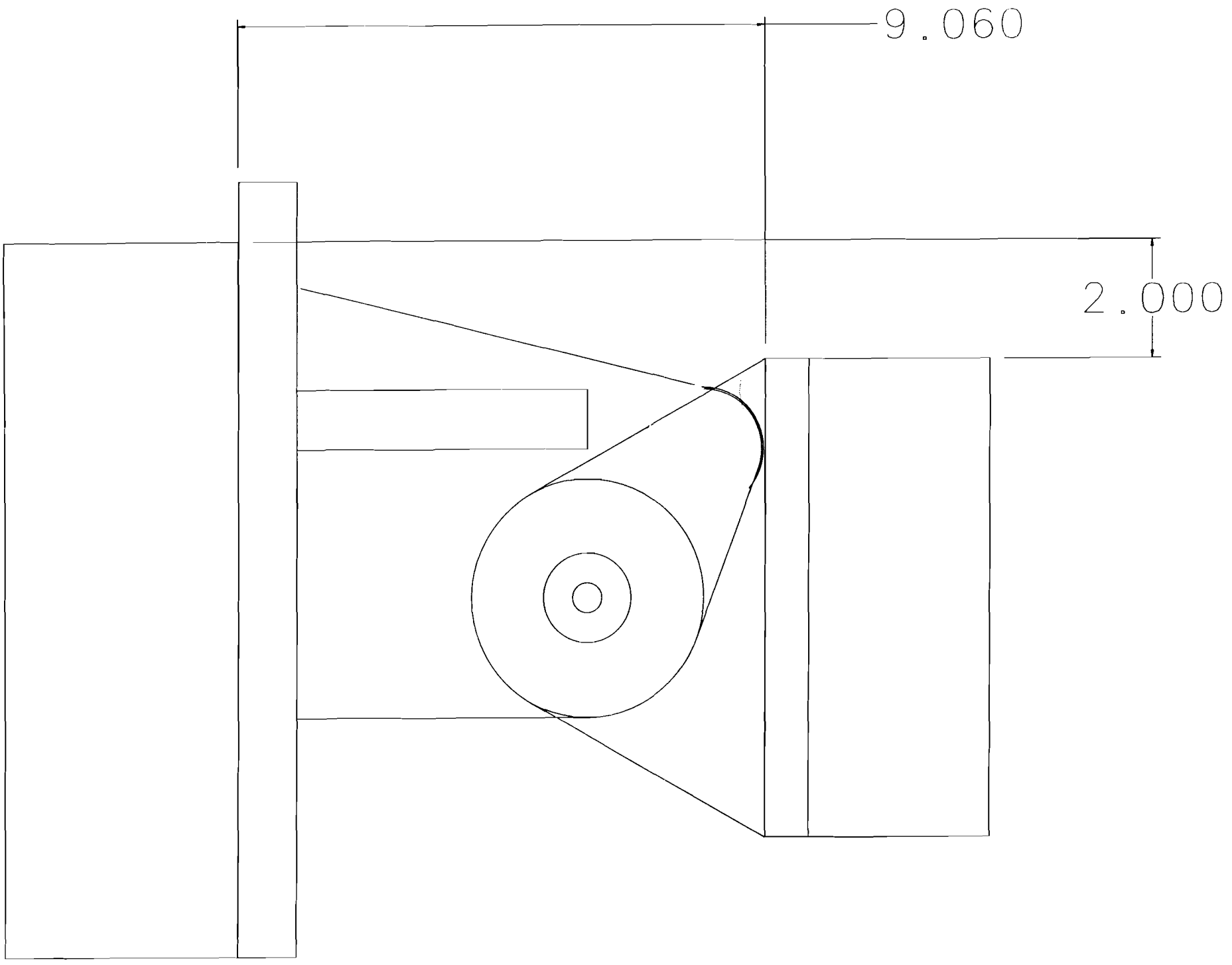
9.060
2.000

[redacted]

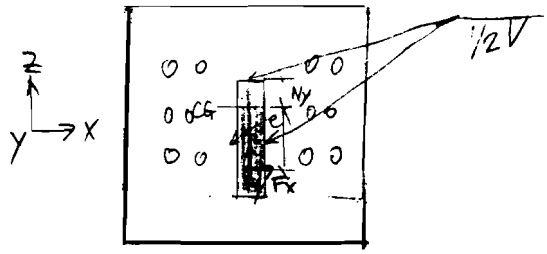

WELDS: E70XX

From previous study, knowing:

$F_x = 1684.7\ lb$ (shear)

$F_y = 3166.2\ lb$ (Tension)

$F_z = 1848\ lb$ (shear)

$M_x = F_z \times 5 + F_y \times e$ (strong axis Bending)

$M_y = F_x \times e$ (Twisting)

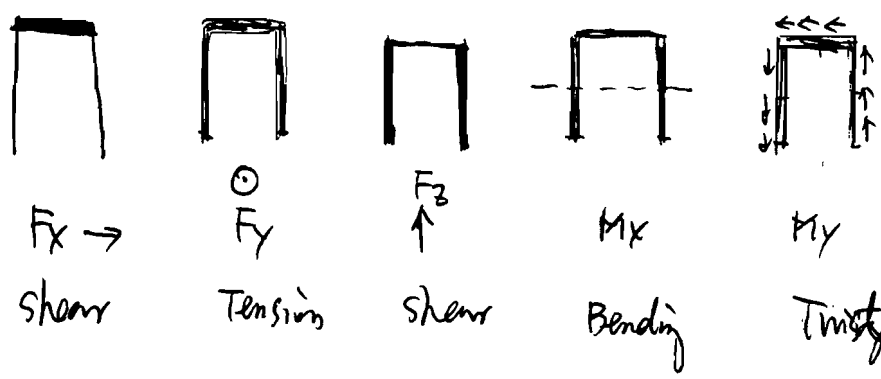

According to "DESIGN OF WELDED STRUCTURES" BLODGETT, section 7.4-7, page 7.4-7, Table 5 "properties of weld treated as line", knowing:

<u>Bending</u>: $S_{w-top} = \dfrac{2bd + d^2}{3}$

where $b = 1$ in

$d = 7.24$ in

$$S_{w\text{-top}} = \frac{2\times1\times7.24+7.24^2}{3} = 22.30 \text{ in}^2$$

$$S_{w\text{-bottom}} = \frac{d^2(2b+d)}{3(b+d)} = \frac{7.24^2(2\times1+7.24)}{3(1+7.24)}$$

$$= 19.59 \text{ in}^2 \text{ — governs}$$

Twisting:

$$J_w = \frac{(b+2d)^3}{12} - \frac{b^2(b+d)^2}{(b+2d)}$$

where $b = 1$ in

$d = 7.24$ in

$$J_w = \frac{(1+2\times7.24)^3}{12} - \frac{1^2\times(1+7.24)^2}{(1+2\times7.24)}$$

$$= 304.74 \text{ in}^3$$

O DETERMINE THE FORCE ON WELD

Shear $f_{vx} = \frac{V_y}{A_w}$ where $V_y = 1684.7$ lb

$A_w = 1$ in

$$f_{vx} = \frac{1684.7}{1} = 1684.7 \text{ lb/in}$$

Tension $f_y = \frac{P}{A_w}$ where $P = 3166.2$ lb

$A_w = 1 + 2\times7.24 = 15.48$ in

$$f_y = \frac{3166.2}{15.48} = 204.5 \text{ lb/in}$$

Shear $f_{vz} = \frac{V_z}{A_w}$ where $V_z = 1848$ lb

$A_w = 2\times7.24 = 14.48$ in

$$f_{vz} = \frac{1848}{14.48} = 127.6 \text{ lb/in}$$

<u>Bending</u> $f_y' = \frac{M}{S_w}$ where $M = M_x = F_z \times 5 + F_y \times e$.

where $e = 7.24 - N_y - 2$

where $N_y = \frac{b^2}{2b+d}$

where $b = 7.24$ in

$d = 1$

$N_y = \frac{7.24^2}{2 \times 7.24 + 1} = 3.39$ in

$e = 7.24 - 3.39 - 2 = 1.85$ in

$M_x = 1848 \times 5 + 3166.2 \times 1.85$

$= 15097.47$ lb-in

$S_w = 19.59$ in^2

$f_y' = \frac{15097.47}{19.57} = 771.46$ lb/in

<u>Twisting</u> $f_{\tau x} = \frac{TC}{J}$ where $T = M_y = F_x \times e$

$= 1684.7 \times 1.85$

$= 3116.70$ lb-in

$C = N_d = 3.39$ in

$J = 304.74$ in^3

$f_{\tau x} = \frac{3116.70 \times 3.39}{304.74}$

$= 34.67$ lb/in

$$f_{\tau z} = \frac{T C_x}{J}$$ where $T = 3116.70$ lb-in

$C_x = 0.5$ in

$J = 304.74$ in^3

$$f_{\tau z} = \frac{3116.70 \times 0.5}{304.74}$$

$$= 5.12 \text{ lb/in}$$

O DETERMINE WELD SIZE BY USING ALLOWABLES:

According to "Design of welded structures" Blodget, Section 7.4, page 7.4-7, knowing:

The resultant force is equal to the square root of the sum of the squares of these three forces

$$f_r = \sqrt{f_1^2 + f_2^2 + f_3^2} = \sqrt{(f_{vx} + f_{\tau x})^2 + (f_y + f_y')^2 + (f_{vz} + f_{\tau z})^2}$$

$$= \sqrt{(1084.7 + 34.67)^2 + (204.5 + 771.46)^2 + (127.6 + 5.12)^2}$$

$$= 1981.5 \text{ lb/in}$$

$$= 1.982 \text{ kips/in}$$

According to AISC, ASD, page 5-67, Table J2.4. knowing the effective throat thickness for fillet weld is 1/2".

According to AISC, ASD. Table J2.5, Page 5-70, knowing the allowable stress on welds is the same as base metal.

According to ANSI/ASME, B30-20,-1993, Below the Hook Lifting Devices, Forming, the allowable stress is equal to 1/3 Fy.

when Fy = 36 ksi for A36.

$$\frac{1}{3}F_y = \frac{1}{3} \times 36 = 12 \text{ ksi}$$

Therefore, the allowable loads in Kips/in is equal to:

$$12 \times 0.707 \times 1/2 = 4.24 \text{ Kips/in}$$

$$SF = \frac{4.24}{1.982} = 2.1$$

[redacted] THE GUSSET PLATE UNDER BEADING STRESSES

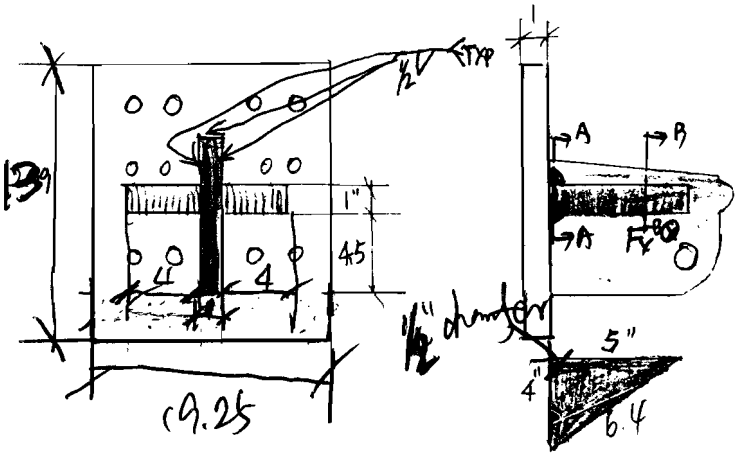

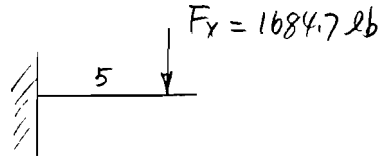

$$M = F_x \times e = 16847 \times 5$$
$$= 8423.5 \text{ lb-in}$$

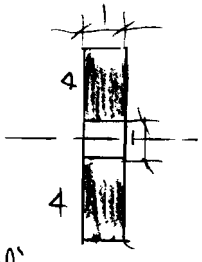

section A-A

$$S_{AA} = \frac{b(d^3 - d_1^3)}{6d}$$

where $b = 1$ in

$d = 4+4+1 = 9$ in

$d_1 = 1$ in

$$S_{AA} = \frac{1 \times (9^3 - 1^3)}{6 \times 9} = 13.48 \text{ in}^3$$

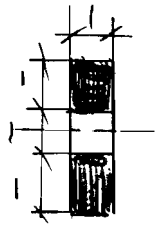

section B-B

$$S_{BB} = \frac{b(d^3 - d_1^3)}{6d}$$

where $b = 1$ in

$d = 1+1+1 = 3$ in

$d_1 = 1$

$$S_{BB} = \frac{1 \times (3^3 - 1^3)}{6 \times 3} = 1.44 \text{ in}^3 \text{ — governs}$$

– FIND COMPUTED BENDING STRESS f_{by} (ksi)

$$f_{by} = \frac{M}{S_y} \qquad \text{where } M = 8423.5 \text{ lb-in}$$

$$S_y = 1.44 \text{ in}^3$$

$$f_{by} = \frac{8423.5}{1.44} = 5.849 \text{ ksi}$$

From the previous study, knowing the allowable stress is 12 ksi

$$SF = \frac{12}{5.849} = 2.05.$$

therefore, the plates (gusset) shown in sketch is adequate.

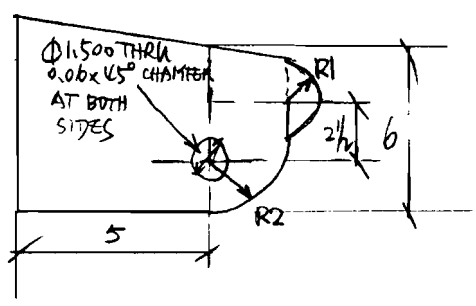

[redacted]

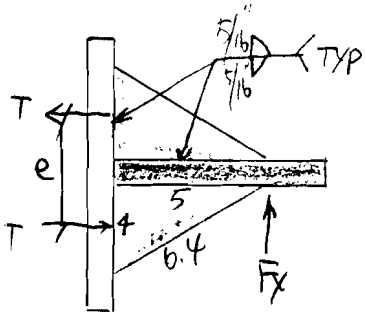

From previous study, known:

$F_x = 1684.7$ lb

Moment:

$M = F_x \times 5 = 1684.7 \times 5 = 8423.5$ lb·in

$M = T \times e$

where $e = 2+2+1$
$= 5$ in

$T = \frac{M}{e} = \frac{8423.5}{5} = 1684.7$ lb.

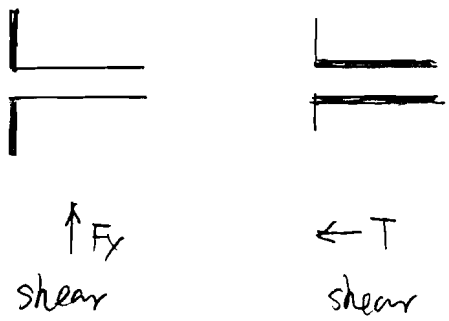

O DETERMINE THE FORCE ON WELD

<u>Shear</u> $f_{vx} = \frac{V}{A_w}$ where $V = 1684.7$ lb
$A_w = 4+4 = 8$ in

$f_{vx} = \frac{1684.7}{8} = 210.59$ lb/in

<u>Shear</u> $f_{vy} = \frac{V}{A_w}$ where $V = T = 1684.7$ lb
$A_w = 5+5 = 10$ in

$f_{vy} = \frac{1684.7}{10} = 168.47$ lb/in

O DETERMINE WELD SIZE BY USING ALLOWABLES:

According to "Design of welded structures" Blodget, Section 7.4, page 7.4-7, knowing:

The resultant force is equal to the square root of the sum of the squares of these two forces:

$$f_v = \sqrt{f_1^2 + f_2^2} = \sqrt{f_{vx}^2 + f_{vy}^2}$$

$$= \sqrt{210.59^2 + 168.47^2} = 269.69 \text{ lb/in} = 0.270 \text{ kips/in}$$

According to AISC, ASD, page 5-67, Table J2.4, knowing the effective throat thickness for fillet weld is 5/16".

According to AISC, ASD, Table J2.5, page 5-70, knowing, the allowable stress on welds is the same as base metal.

According to ANSI/ASME, B30-20-1993, Below the Hook Lifting Devices, knowing, the allowable stress is equal to 1/3 Fy. where Fy = 36 ksi for A36.

$$1/3 F_y = \frac{1}{3} \times 36 = 12 \text{ ksi}$$

Therefore, the allowable loads in kips/in is equal to:

$$12 \times 0.707 \times 5/16 = 2.65 \text{ kips/in}$$

$$SF = \frac{2.65}{0.270} = 9.8$$

3) DESIGN HILLMAN ROLLER PIVOT WELDMENT

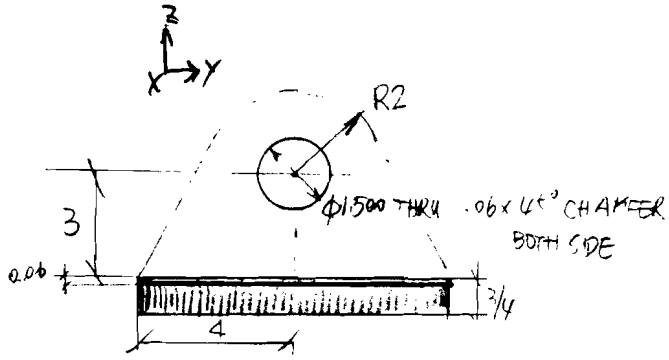

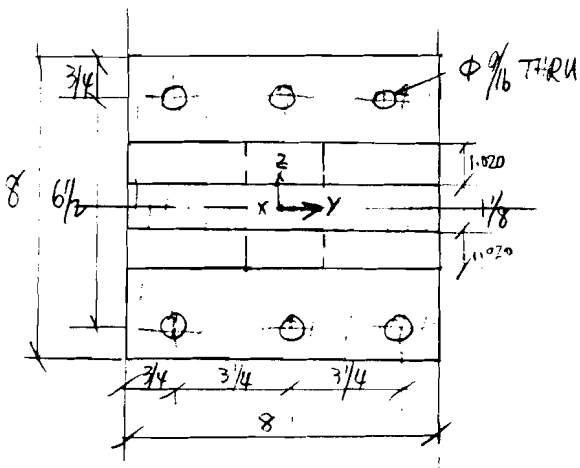

Bolt 1/2"-13-UNC-2A.

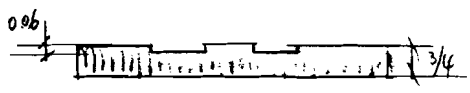

(2) Required.

From the previous study, knowing:

$F_z = 1848$ lb

$F_y = 3166.2$ lb

$F_x = 1684.7$ lb.

① CHECK THE BEARING STRESS ON THE PIN HOLE

$f_p = \frac{P}{A}$ where

$P = \sqrt{f_z^2 + f_y^2} \times \frac{1}{2}$

$= \frac{1}{2} \times \sqrt{1848^2 + 3166.2^2}$

$= 1833$ lb

$A = 1.5 \times 1 = 1.5$ in^2

$f_p = \frac{1833}{1.5} = 1.22$ ksi

knowing $F_p = 12$ ksi

$SF = \frac{12}{1.22} = 9.8$

HILMAN ROLLERS

MOVE THE . . . .

OT ROLLERS

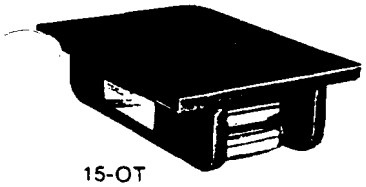

15-OT

75-OT

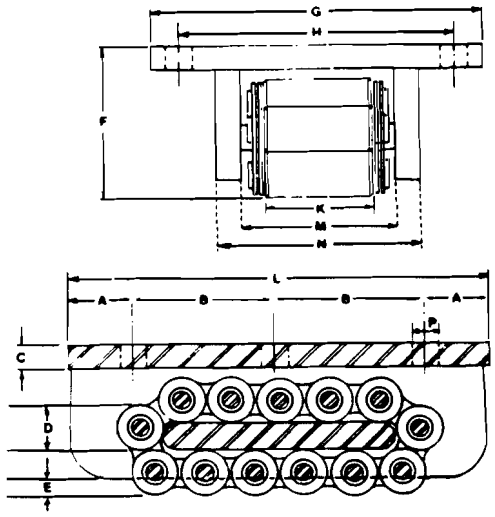

The Hilman "OT" series of rollers are the OEM leaders of the line, in that the OT or oversize top is ideal for a bolt mount or a weld mount to the load. In addition to being able to secure the load permanently (or semi-permanently), the top plate adds extra strength to the frame. For basic linear motion, the "OT's" are used as bearings, slides, conveyors, guides, and casters, as well as dollies. Seven sizes are available ranging in capacity from ¾ tons to 75 tons each.

Typical applications are the straight motion required for thermal expansion under a furnace or heat exchanger, an oil rig move from well to well, the launching of pipe, the removal of nuclear waste, and the motion of portable grandstand seats.

"OT's" are used in the horizontal and vertical planes, on their sides (as guides for large doors) and upside down for the conveyance of very heavy loads.

All OT rollers are available with a standard top plate size and hole pattern. The size, as well as the pattern, can be modified upon specific request. Preload Pads (elastomeric) are often used in conjunction with OT Rollers. All deviations from the standard dimensions should be clearly stated and are subject to approval by our engineering department.

Model	Old Model No.	Capa'ty Ea. Met. Tons		Dimensions A	B	C	D	E	F	G	H	K	L	M	N	P	No. Contact Rolls	Weight
.75-OT	New	.75	In.	11/16	2 9/16	⅜	11/16	¼	3⅛	5½	4¾	1⅞	6½	2 5/16	3 7/16	⅜	5	13 lbs.
			mm	17	65	10	17	6	79	140	121	48	165	59	87	10		6 kg.
2.5-OT	New	2.5	In.	¾	2½	⅜	15/16	7/16	3⅜	7	5½	2 7/16	6½	3⅜	4⅛	½	4	20 lbs.
			mm	19	64	10	24	11	92	178	140	62	165	86	105	13		9.1 kg.
5-OT	2-OT	5	In.	¾	3¼	⅜	15/16	½	3⅛	8	8½	2 7/16	8	3⅜	4⅝	½	5	24 lbs.
			mm	19	33	10	24	13	83	203	165	62	203	92	118	13		10.9 kg.
-OT	3-OT	15	In	1⅝	3 11/16	9/16	1 3/16	½	3⅞	8½	7	2¾	10⅝	4⅛	5¼	11/16	6	38 lbs.
			mm	41	94	14	30	13	98	216	178	70	270	105	133	17		17.2 kg.
20-OT	New	20	In.	1⅝	3 11/16	9/16	1 3/16	½	3⅞	10	8¼	4	10⅝	5⅜	6½	11/18	6	45 lbs.
			mm	41	94	14	30	13	98	254	210	102	270	137	165	17		20.4 kg.
37.5-OT	4-OT	37.5	In	2	5'.	¾	1⅝	½	5½	10¾	8⅝	3⅛	15	4⅞	6⅛	¾	6	108 lbs.
			mm	51	140	19	41	13	140	273	219	79	381	124	175	19		49.0 kg.
75-OT	5-OT	75	In	1¼	9¼	1	1 15/16	½	6¾	14	11½	3⅝	21	5½	7½	1	7	239 lbs.
			mm	32	235	25	49	13	171	356	292	92	533	140	191	25		108.5 kg.

Same sizes are available in T and NT styles. OT Turntables are available in most sizes. We reserve the right to change specifications without notice.

ACCU-ROLL

Accu-Roll can be added to any standard roller.

Accu-Roll guidance system is a positive, external alignment option. When load alignment is critical, the system acts as an alignment indicator for precise tracking. Type "R" is used on flat bar, rail, or beam. Type "C" is used with a channel. Widths and depths of cams are entirely flexible and made on a custom basis. Consult us for recommendation, based on track size and load weight. Other Accu-Roll formats are available upon request.

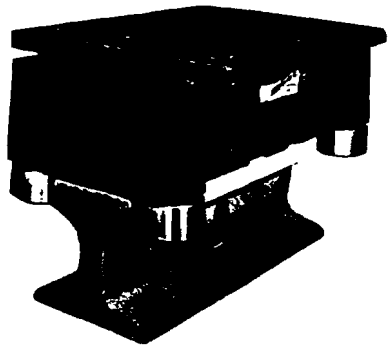

Accu-Roll Type R

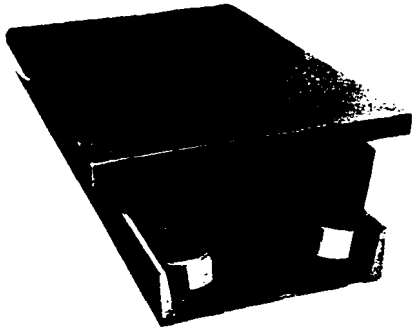

Accu-Roll Type C

HILMAN ROLLERS
2604 Atlantic Avenue
Wall, New Jersey 07719 USA
☎ 201/449-9296
Telex: 283782 Hilm-UR
Fax #: 201/223-8072
Toll Free:
800-631-2177
Cont. USA except N.J.

Your authorized Hilman Roller distributor is:

OT ROLLERS

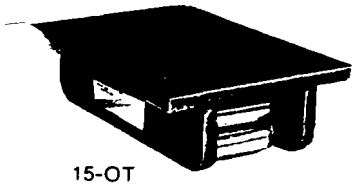

15-OT

75-OT

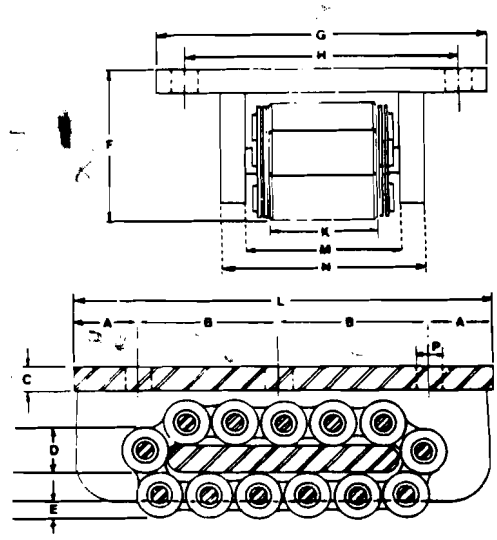

The Hilman "OT" series of rollers are the OEM leaders of the line, in that the OT or oversize top is ideal for a bolt mount or a weld mount to the load. In addition to being able to secure the load permanently (or semi-permanently), the top plate adds extra strength to the frame. For basic linear motion, the "OT's" are used as bearings, slides, conveyors, guides, and casters, as well as dollies. Seven sizes are available ranging in capacity from ¾ tons to 75 tons each.

Typical applications are the straight motion required for thermal expansion under a furnace or heat exchanger, an oil rig move from well to well, the launching of pipe, the removal of nuclear waste, and the motion of portable grandstand seats.

"OT's" are used in the horizontal and vertical planes, on their sides (as guides for large doors) and upside down for the conveyance of very heavy loads.

All OT rollers are available with a standard top plate size and hole pattern. The size, as well as the pattern, can be modified upon specific request. Preload Pads (elastomeric) are often used in conjunction with OT Rollers. All deviations from the standard dimensions should be clearly stated and are subject to approval by our engineering department.

Model	Old Model No.	Capa'ty Ea. Met. Tons		Dimensions A	B	C	D	E	F	G	H	K	L	M	N	P	No. Contact Rolls	Weight
75-OT	New	.75	in.	11/16	2 9/16	⅜	11/16	¼	3⅛	5½	4¾	1⅛	6½	2 5/16	3 7/16	⅜	5	13 lbs.
			mm	17	65	10	17	6	79	140	121	48	165	59	87	10		6 kg.
2.5-OT	New	2.5	in.	¾	2½	⅜	15/16	7/16	3⅜	7	5½	2 7/16	8½	3⅜	4⅛	½	4	20 lbs.
			mm	19	64	10	24	11	92	178	140	62	165	86	105	13		9.1 kg.
5-OT	2-OT	5	in.	¾	3¼	⅜	15/16	½	3¼	8	6½	2 7/16	8	3⅜	4⅜	½	5	24 lbs.
			mm	19	33	10	24	13	83	203	165	62	203	92	118	13		10.9 kg.
15-OT	3-OT	15	in.	1⅜	3 11/16	9/18	1 3/16	½	3⅞	8½	7	2¾	10⅜	4⅛	5¼	11/16	6	38 lbs.
			mm	41	94	14	30	13	98	216	178	70	270	105	133	17		17.2 kg.
20-OT	New	20	in	1⅜	3 11/16	9/16	1 3/16	½	3⅞	10	8¼	4	10⅜	5⅜	6½	11/16	6	45 lbs.
			mm	41	94	14	30	13	98	254	210	102	270	137	165	17		20.4 kg.
37.5-OT	4-OT	37.5	in	2	5[illegible]	¾	1⅜	½	5½	10¾	8⅜	3⅛	15	4⅛	6⅞	¾	6	108 lbs.
			mm	51	140	19	41	13	140	273	219	79	381	124	175	19		49.0 kg.
75-OT	5-OT	75	in	1[illegible]	9¼	1	1 15/16	½	6¾	14	11½	3⅜	21	5½	7½	1	7	239 lbs.
			mm	32	235	25	49	13	171	356	292	92	533	140	191	25		108.5 kg.

Same sizes are available in T and NT styles. OT Turntables are available in most sizes. We reserve the right to change specifications without notice.

ACCU-ROLL

Accu-Roll can be added to any standard roller.

Accu-Roll guidance system is a positive, external alignment option. When load alignment is critical, the system acts as an alignment indicator for precise tracking. Type "R" is used on flat bar, rail, or beam. Type "C" is used with a channel. Widths and depths of cams are entirely flexible and made on a custom basis. Consult us for recommendation, based on track size and load weight. Other Accu-Roll formats are available upon request.

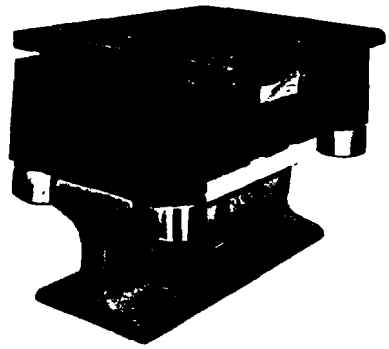

Accu-Roll Type R

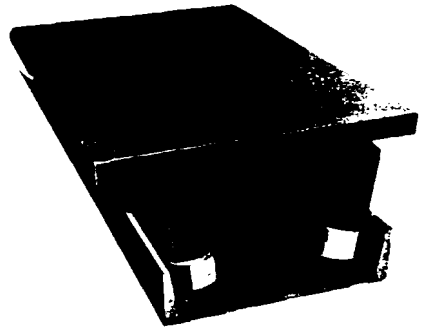

Accu-Roll Type C

HILMAN ROLLERS
2604 Atlantic Avenue
Wall, New Jersey 07719 USA
☎ 201/449-9296
Telex: 283782 Hilm-UR
Fax #: 201/223-8072
Toll Free:
800-631-2177
Cont. USA except N.J.

Your authorized Hilman Roller distributor is:

O CHECK THE SHEARING STRESS THROUGH THE PIN HOLE.

$$f_v = \frac{V}{A} \qquad \text{where } V = \left(\sqrt{f_z^2 + f_y^2}\right) \times \frac{1}{2}$$

$$= \left(\sqrt{1848^2 + 3166.2^2}\right) \times \frac{1}{2}$$

$$= 1833 \text{ lb}$$

$$A = (5 \times 1) - (1.5 \times 1) = 3.5 \text{ in}^2$$

$$f_v = \frac{1833}{3.5} = 0.524 \text{ ksi}$$

Knowing the allowable shear stress is 12 ksi

$$SF = \frac{12}{0.524} = 22.9$$

O CHECK THE BENDING STRESS ON THE LUG

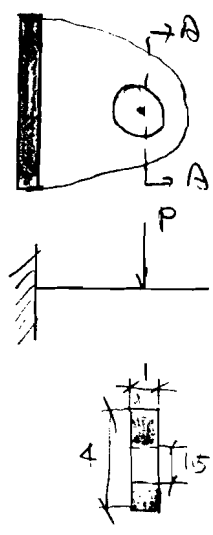

$$M_{max} = Pl$$

where $P = F_x = 1684.7$

$l = 3$ in

$$M_{max} = 1684.7 \times 3 = 5054.1 \text{ lb-in}$$

$$S = \frac{b(d^3 - d_1^3)}{6d} \qquad \text{where } b = 1 \text{ in}, \; d = 4 \text{ in}, \; d_1 = 1.5 \text{ in}$$

$$= \frac{1 \times (4^3 - 1.5^3)}{6 \times 4}$$

$$= 2.53 \text{ in}^3$$

$f_b = \frac{M}{S}$ where $M = 5054.1$ lb-in

$S = 2.53$ in^3

$f_b = \frac{5054.1}{2.53} = 1.998$ ksi

Knowing, the allowable bending stress is 12 ksi

$SF = \frac{12}{1.998} = 6$.

○ CHECK THE PLATE BENDING STRESS

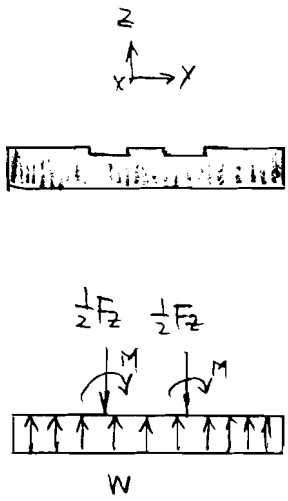

From previous study, knowing

$F_z = 1848$ lb

$M = 5054.1$ lb-in.

$W = \frac{F_z}{A}$ where $A = 8 \times 8 = 64$ in^2

$W = \frac{1848}{64} = 28.88$ lb/in^2

Let's consider 1" width, then uniform load is equal to:

$W = 28.88 \times 1$

$= 28.88$ lb/in

From Beam diagrams and formulas, AISC, ASD, page 2-299~300 know:

1) uniform load:

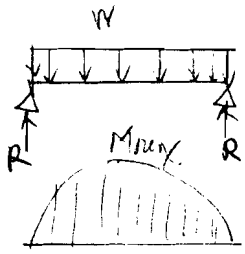

$M_{max} = \frac{wl^2}{8}$ where $w = 28.88$ lb/in

$L = 8$ in

$M_{max} = \frac{28.88 \times 8^2}{8}$

$= 231.04$ lb-in

$R = \frac{wl}{2} = \frac{28.88 \times 8}{2} = 115.2$ lb

2) Two equal concentrated loads:

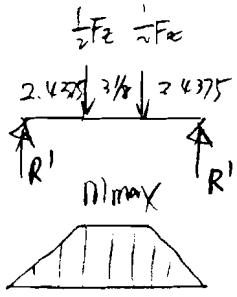

$R' = \frac{P}{l}(l - 2a)$

Where $P = \frac{1}{2}F_z = \frac{1}{2} \times 1848 = 924$ lb

$l = 8$ in

$a = 2.4375$ in

$R' = \frac{924}{8}(8 - 2 \times 2.4375)$

$= 360.94$ lb

$M_{max}' = R' \times a$

$= 360.94 \times 2.4375$

$= 879.79$ lb-in

3) Moment

Assume the load is uniformly distributed

$$M = \frac{wL^2}{8}$$

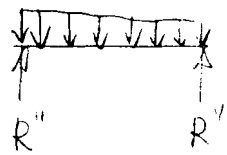

$$w = \frac{8M}{L^2}$$ where $M = 5054.1$ lb-in, $l = 8$ in

$$w = \frac{8 \times 5054.1}{8^2}$$

$$= 631.8 \text{ lb/in}.$$

$$R'' = \frac{wL}{2}$$

$$= \frac{631.8 \times 8}{2} = 2527.2 \text{ lb}.$$

Therefore, the total reaction force R_r is equal to

$$R_r = R + R' + R''$$

where $R = 115.2$ lb
$R' = 360.94$ lb
$R'' = 2527.2$ lb

$$R_r = 115.2 + 360.94 + 2527.2$$

$$= 3003.34 \text{ lb}$$

Therefore, the combined moment is equal to

$$M = M + M_{max} + M_{max}'$$

where $M = 5054.1$ lb-in

$M_{max} = 115.2$ lb-in

$M_{max}' = 879.79$ lb-in

$$M = 5054.1 + 115.2 + 879.79 = 6049.09 \text{ lb-in}$$

The computed Bending stress in the plate:

$$f_b = \frac{M}{S}$$

where $M = 6049.09$ lb-in

$$S = \frac{bd^2}{6} = \frac{8 \times 3/4^2}{6} = 0.75 \text{ in}^3$$

$$f_b = \frac{6049.09}{0.75} = 8.065 \text{ ksi}$$

Normally, the allowable bending stress is 12ksi

$$SF = \frac{12}{8.065} = 1.5$$

○ CHECK THE BEARING STRESS AT THE CONTACT LUG.

$$f_p = \frac{P}{A} \quad \text{where } P = \frac{1}{2}F_z = \frac{1}{2} \times 1848 = 924 \text{ lb}$$

$$A = 1 \times 8 = 8 \text{ in}^2$$

$$f_p = \frac{924}{8} = 115.5 \text{ psi} = 0.116 \text{ ksi}$$

From previous study, knowing the allowable bearing stress is 12 ksi.

$$SF = \frac{12}{0.116} = 103$$

○ CHECK THE TENSILE STRESS ON THE BOLT

From the previous study, knowing: Tension on the Bolts is equal to the reaction force R_V. Then

$$T = R_V = 3003.34 \text{ lb}.$$

Tensile stress per bolt:

$$f_t = \frac{P}{A} \quad \text{where } P = \frac{1}{3}T = \frac{1}{3} \times 3003.34 = 1001 \text{ lb}$$

$$A = \frac{1}{4}\pi d^2 = \frac{1}{4} \times \pi \times \left(\frac{1}{2}\right)^2 = 0.196 \text{ in}^2$$

$$f_t = \frac{1001}{0.196} = 5.107 \text{ ksi}$$

From the previous study, knowing the allowable tensile stress is 30.6 ksi.

The safety factor on tensile stress is

$$SF = \frac{F_t}{f_t} = \frac{30.6}{5.107} = 6$$

O CHECK THE SHEAR STRESS ON THE BOLT:

Known $F_x = 1684.7\ lb$ (shear)

$F_y = 3166.2\ lb$ (shear)

The resultant shear is

$$F_v = \sqrt{F_x^2 + F_y^2} = \sqrt{1684.7^2 + 3166.2^2} = 3586.5\ lb$$

The computed shear stress per bolt is

$$f_v = \frac{V}{A} \quad \text{where } V = \frac{1}{6} F_v = \frac{1}{6} \times 3586.5 = 598\ lb$$

$$A = 0.196\ in^2$$

$$f_v = \frac{598}{0.196} = 3.050\ ksi$$

From the previous study, knowing the allowable shear stress on bolt is 21 ksi. Therefore, the safety factor is

$$SF = \frac{F_v}{f_v} = \frac{21}{3.050} = 6.9$$

O CHECK THE SHEAR ON THE PIN

1018 COLD DRAWN STEEL. $F_y = 54$ ksi.

According to AISC, ASD. TABLE I-D. page 4-5, knowing, the Allowable shear load in kips is 35.

Knowing: $F_r = 35865$ lb. $= 3.587$ kips.

Therefore, the safety factor is

$$SF = \frac{35}{3.587} = 9.8$$

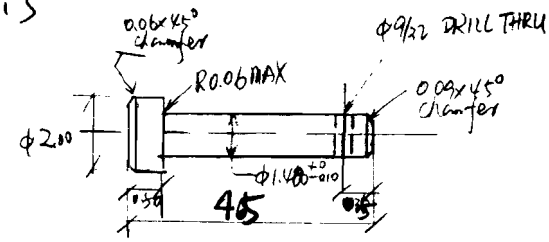

⊕ Zinc-plated steel Hair pin Fits 1 1/8"~1 1/2" shaft Dia Range, 5" overall Lg. Mc-master Carr 98335A114

O DESIGN THE WELD ON HILLMAN ROLLER PIVOT WELDMENT

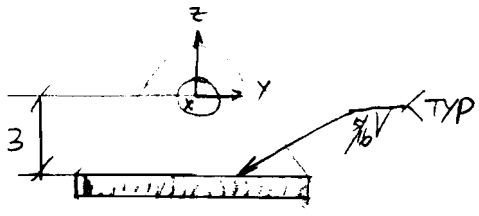

From the previous study, knowing:

$F_x = 1684.7$ lb

$F_y = 3166.2$ lb

$F_z = 1848$ lb

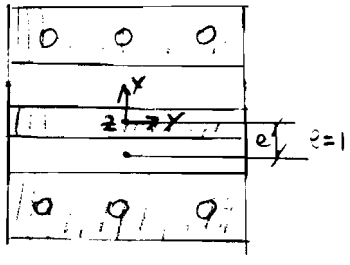

Therefore:

$F_x' = \frac{1}{2} F_x = \frac{1}{2} \times 1684.7 = 842.35$ lb

$F_y' = \frac{1}{2} F_y = \frac{1}{2} \times 3166.2 = 1583.1$ lb

$F_z' = \frac{1}{2} F_z = \frac{1}{2} \times 1848 = 924$ lb

$M_x = F_y' \times 3 = 1583.1 \times 3 = 4749.3$ lb-in

$M_y = F_x' \times 3 + F_z \times e$

$= 842.35 \times 3 + 1848 \times 1 = 4375.95$ lb-in

WELDS:

E70XX

$$M_z = F_y \times e$$
$$= 3166.2 \times 1 = 3166.2 \text{ lb-in}$$

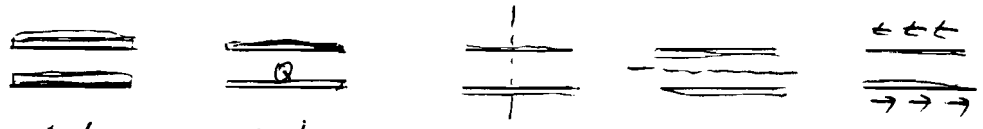

$F_y' \rightarrow$	F_z'	M_x	M_y	M_z
Shear	Tension	Bending	Bending	Torsion

According to "DESIGN OF WELDED STRUCTURES" BLODGETT, Section 7.4-7, page 7.4-7, Table 5 "Properties of weld treated as Line", knowing:

<u>Bending:</u> $S_x = \frac{d^2}{3}$ where $d = 8$

$$S_x = \frac{8^2}{3} = 21.33 \text{ in}^2$$

<u>Bending:</u> $S_y = bd$ where $b = 8$ in, $d = 1$ in

$$S_y = 8 \times 1 = 8 \text{ in}^2$$

<u>Torsion:</u> $J_w = \frac{b^3 + 3bd^2}{6}$ where $b = 8$ in, $d = 1$ in

$$= \frac{8^3 + 3 \times 8 \times 1^2}{6}$$
$$= 89.33 \text{ in}^3$$

O DETERMINE THE FORCE ON WELD

<u>Shear</u>: $f_{vy} = \frac{V_y}{A}$ where $V_y = 1583.1$ lb

$A = 8 \times 2 = 16$ in

$f_{vy} = \frac{1583.1}{16} = 99$ lb/in

<u>Tension</u>: $f_z = \frac{P}{A}$ where $P = F_z' = 924$ lb

$A = 8 \times 2 = 16$ in

$f_z = \frac{924}{16} = 58$ lb/in

<u>Bending</u>: $f_z' = \frac{M_x}{S_x}$ where $M_x = 4749.3$ lb-in

$S_x = 21.33$ in^2

$f_z' = \frac{4749.3}{21.33} = 222.6$ lb/in

<u>Bending</u>: $f_z'' = \frac{M_y}{S_y}$ where $M_y = 4375.05$ lb-in

$S_y = 8$ in

$f_z'' = \frac{4375.05}{8} = 547$ lb/in

<u>Twisting</u>: $f_{\tau y} = \frac{TC}{J}$ where $T = M_z = 3166.2$ lb-in

$C = 0.5$ in

$J = 89.33$ in^3

$f_{\tau y} = \frac{3166.2 \times 0.5}{89.33}$

$= 17.7$ lb/in

O DETERMINE WELD SIZE BY USING ALLOWABLES:

According to "Design of welded structures" Blodgett, Section 7.4, page 7.4-7, knowing:

The resultant force is equal to the square root of the sum of the squares of these three forces

$$f_V = \sqrt{f_1^2 + f_2^2 + f_3^2}$$

$$= \sqrt{(f_z + f_z' + f_z'')^2 + (f_{vy} + f_{cy})^2}$$

$$= \sqrt{(58 + 222.6 + 547)^2 + (99 + 17.7)^2}$$

$$= 835.78 \text{ lb/in}$$

$$= 0.836 \text{ kips/in}$$

According to AISC, ASD, page 5-67, Table J2.4, knowing the effective throat thickness for fillet weld is 5/16"

According to AISC, ASD, Table J2.5, page 5-70, knowing the allowable stress on welds is the same as base metal.

According to ANSI/ASME, B30.10-1993, Below the Hook Lifting Devices, knowing, the allowable stress is equal to 1/3 of the yield stress.

when $F_y = 36$ ksi for A36

$$\frac{1}{3}F_y = \frac{1}{3} \times 36 = 12 \text{ ksi}$$

Therefore, the allowable load in kips/in is equal to

$$12 \times 0.707 \times 5/16 = 2.65 \text{ kips/in}.$$

the Safety Factor is equal to:

$$SF = \frac{2.65}{0.836} = 3.2$$

0 DETERMINE THE HILLMAN ROLLER CONNECTING BOLT LENGTH:

* Bolt: 1/2"-13-UNC-2A TYPE 1 (medium carbon steel)
* NUT: A194 grade 2 for Bolt 1/2" dia hardened.
  NUT HEIGHT: 1/2"
* Washer: F436 hardened flat washer for Bolt 1/2" dia.
  washer Height: 5/32"

Bolt Length = the total thickness of all connected material + Grip + Washer

$$= (3/8 + 3/4) + (11/16) + (5/32")$$

$$= 1.97" \quad \text{use } 2"$$

Bolt: 1/2-13-UNC-2A - 2" long x 12 (each)

0 TORQUE

$T = 0.195 d W$ where $d = 0.5$ in $W = \frac{5 \times 2000}{6} = 1667$ lbs

$T = 0.195 \times 0.5 \times 1667 = 162.5$ lb-in $= 13.54$ lb-ft

use 70 lb-ft.

[redacted] PIVOT ASSEMBLY WEIGHT

1) Plate A : $13'' \times 19.25'' \times 1'' \times (2) \rightarrow 142\ lb$
2) plate B : $19.25'' \times 11.875'' \times 1'' \times (2) \rightarrow 130\ lb$
3) Bolt 3/4" : $8''$ long $\times (24) \rightarrow 31.5\ lb$
4) plate : $1'' \times 7'' \times 8'' \times (2) \rightarrow 32\ lb$
5) gusett plate : $\frac{1}{2}'' \times 5'' \times 4'' \times (2) \rightarrow 7\ lb$
6) Roller : $24\ lb \times (2) \rightarrow 48\ lb$
7) Hilman roller pivot weldment

$$[2 \times (5 \times 8 \times 1) + (8 \times 8 \times 3/4)] \times (2) \rightarrow 73\ lb$$

8) PIN : $\frac{1}{4}\pi \times 1{,}460 \times 45 \times (2) \rightarrow 7\ lb$
9) Bolt 1/2" : $2''$ long $\times (12)$

Total weight $= 142 + 130 + 31.5 + 32 + 7 + 48 + 73 + 7$

$= 470.5\ lb$

— DESIGN THE LIFTING LUG TO MOUNT THE HILMAN ROLLERS.

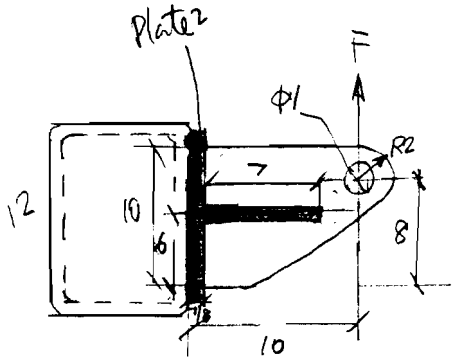

DESIGN LOAD F.

$F = \frac{1}{2}$ (STRONGBACK + PLATE) + ROLLER ASSEMBLY + Supporting Lip

From the previous study, knowing:

1) strongback frame + connections + clamping system + plate + scintillator + Ear support

$= 2814 + 1421 + 121 + 7555 + 378 + 180$

$= 12469$ lb

2) Roller assembly $= 348$ lb

3) Supporting Lip $= 180$ lb

therefore,

$$F = \frac{1}{2} \times 12469 + 348 + 180$$

$$= 6762.5 \text{ lb}$$

USE 13000 lb chain shackle with screw pin.

stock Diameter = 7/8"

Mc-master Carr

3560T52

A = 1 7/16"

B = 1"

C = 2 13/16"

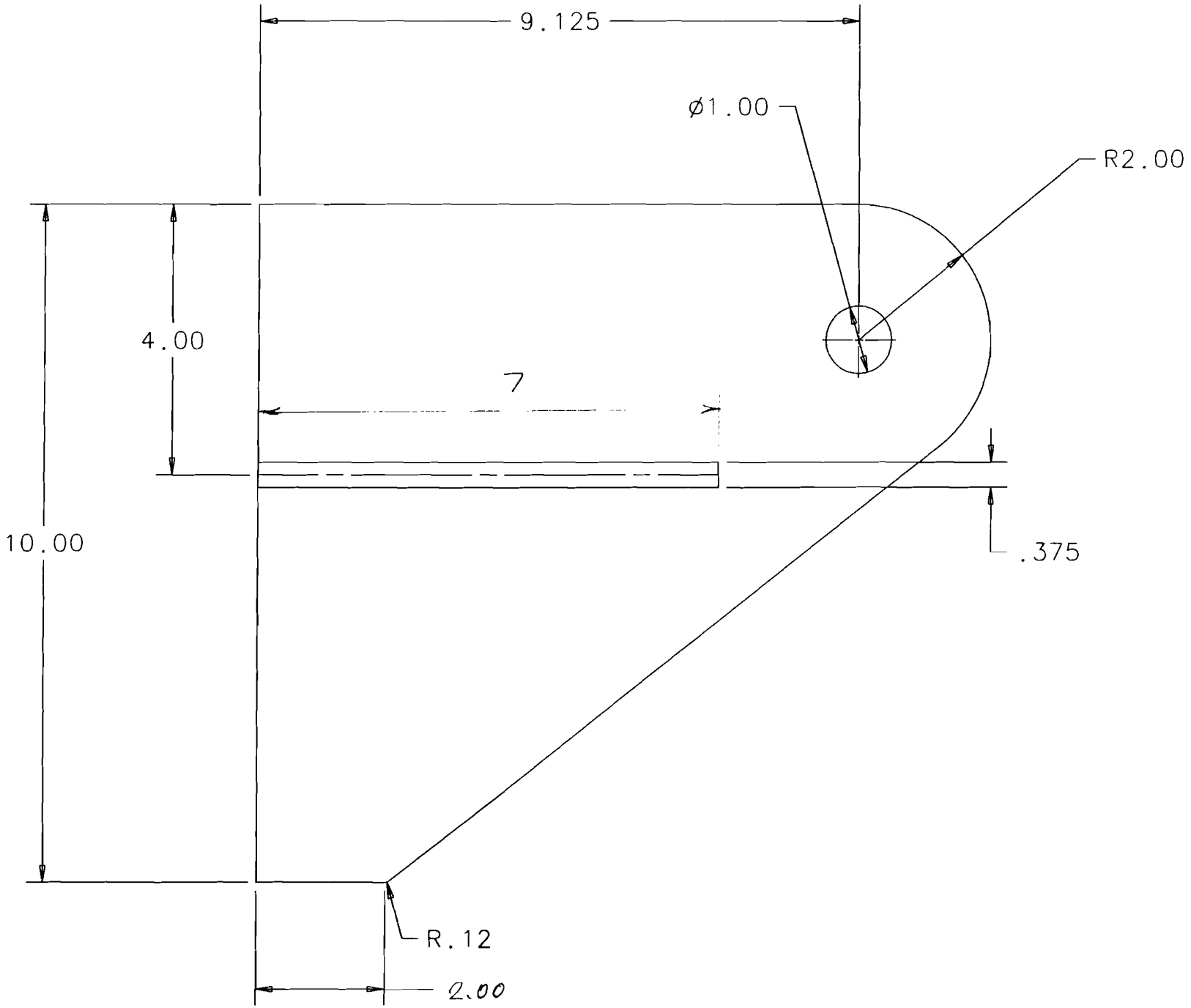
9.125
Ø1.00
R2.00
4.00
7
10.00
.375
R.12
2.00

o FIND THE BENDING STRESS f_b

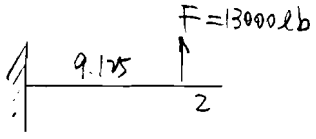

According to AISC, ASD, Beam Diagrams & Formulas, knowing:

$$M_{max} = P \times b$$

where $P = 13000$ lb

$b = 9.125$ in

$$M_{max} = 13000 \times 9.125$$

$$= 118625 \text{ lb-in}$$

$$S_x = \frac{bd^2}{6}$$ where $b = 1.25$ in, $d = 10$ in

$$S_x = \frac{1.25 \times 10^2}{6}$$

$$= 20.83 \text{ in}^3$$

$$f_b = \frac{M}{S_x}$$ where $M = 118625$ lb-in, $S_x = 20.83$ in^3

$$= \frac{118625}{20.83}$$

$$= 5.694 \text{ ksi}$$

From the previous study, knowing,

$F_b = 12$ ksi

then the safety factor is

$$SF = \frac{12}{5.694} = 2.1$$

O FIND THE BEARING STRESS f_p.

$$f_p = \frac{F}{dt} \qquad \text{where } F = 13000 \text{ lb}$$
$$d = 1 \text{ in}$$
$$t = 1.25 \text{ in}$$

$$f_p = \frac{13000}{1 \times 1.25} = 10.400 \text{ ksi}$$

From the previous study, knowing the allowable is 12ksi
therefore, the safety factor is

$$SF = \frac{12}{10.4} = 1.15$$

O FIND THE SHEAR STRESS f_v.

$$f_v = \frac{V}{A} \qquad \text{where } V = 13000 \text{ lb}$$
$$A = 2 \times r \times t$$
$$\text{where } r = \sqrt{R^2 - 0.5^2} = \sqrt{2^2 - 0.5^2} = 1.94 \text{ in}$$
$$t = 1.25 \text{ in}$$

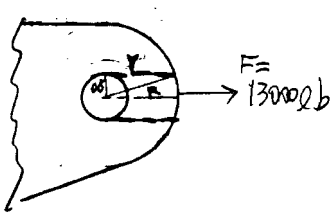

$$A = 2 \times 1.25 \times 1.94 = 4.85 \text{ in}^2$$

$$f_v = \frac{13000}{4.85} = 2.680 \text{ ksi}$$

From the previous study, knowing the allowable is 12ksi
therefore, the safety factor is

$$SF = \frac{12}{2.680} = 4.5$$

O FIND THE TEAR OUT SHEAR

$$f_v' = \frac{V}{A} \quad \text{where } V = 13000 \text{ lb}$$

$$A = 2 \times r' \times t$$

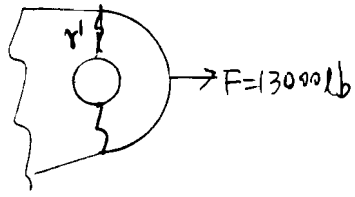

where $r' = 2 - 0.5 = 1.5$ in

$t = 1.25$ in

$$f_v' = \frac{13000}{2 \times 1.5 \times 1.25}$$

$$= 3.467 \text{ ksi}$$

From the previous study, knowing the allowable is 12 ksi therefore, the safety factor is

$$SF = \frac{12}{3.467} = 3.5$$

O CHECK THE DEFLECTION ON THE TUBING WALL

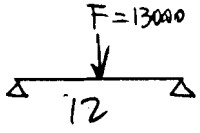

According to AISC, ASD, BEAM DIAGRAMS and Formulas, page 2-298, knowing.

$$\Delta_{max} = \frac{P l^3}{48EI}$$

where $P = 13000$ lb

$l = 12$ in

$I = \frac{bd^3}{12}$ where $b = 8.25$ in

$d_1 = 0.3125$ in

$d_2 = 0.875$ in

$$I = \frac{8.25 \times}{12}\left(0.3125^3 + 0.875^3\right)$$

$$= 0.48 \text{ in}^4$$

$$\Delta_{max} = \frac{13000 \times 12^3}{48 \times 29 \times 10^6 \times 0.48}$$

$$= 0.034 \text{ in}$$

the allowable deflection is

$$\frac{l}{280} = \frac{12}{280} = 0.043 \text{ in}$$

therefore, the safety factor is

$$SF = \frac{0.043}{0.034} = 1.3$$

O DESIGN THE GUSSET PLATES & WELDS

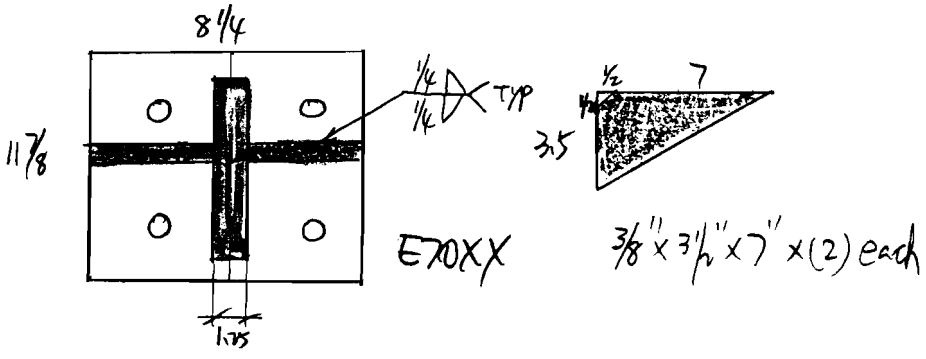

AISC, ASD, TABLE J2.4, page 5-67, knowing, the fillet weld size is 1/4"

O DESIGN THE WELDS

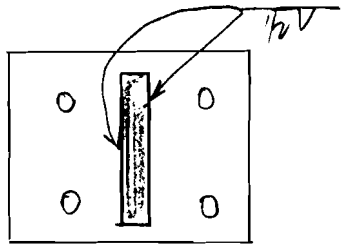

WELDS : E70XX

— FIND THE FORCE ON THE WELDS.

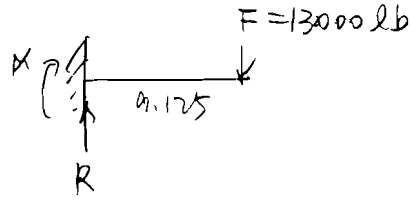

$M = F \times 9.125$

$= 13000 \times 9.125$

$= 118625$ lb-in

$R = F = 13000$ lb

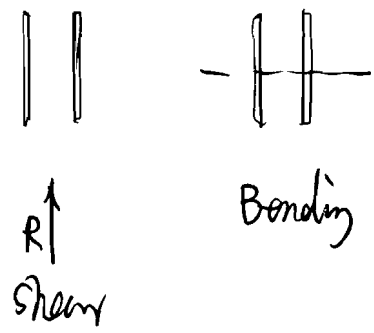

— shear: $f_v = \frac{V}{A_w}$ where $V = R = 13000$ lb

$A_w = 2 \times 10 = 20$ in

$f_v = \frac{13000}{20} = 650$ lb/in

— Bending: $f_b = \frac{M}{S_w}$ where $M = 118625$ lb-in

$S_w = \frac{d^2}{3}$ $d = 10$ in

$= \frac{10^2}{3}$

$= 33.33$ in^2

$$f_b = \frac{118675}{33.33} = 3558.75 \text{ lb/in}$$

O FIND THE WELD SIZE BY USING ALLOWABLES:

According to "Design of welded structures" B Lodget, section 7.4, page 7.4-7, knowing:

The resultant force is:

$$f_r = \sqrt{f_v^2 + f_b^2}$$
$$= \sqrt{650^2 + 3558.75^2}$$
$$= 3617.6 \text{ Kip/in}$$
$$= 3.6 \text{ Kips/in}$$

According to AISC, ASD, Table J2.5, page 5-70, knowing the allowable stress on welds is the same as base metal.

According to ANSI/ASME, B30.20-1993, Below the Hook Lifting Devices. knowing, the allowable stress is equal to $\frac{1}{3} F_y$. where $F_y = 36$ ksi for A36

$$\frac{1}{3} F_y = \frac{1}{3} \times 36 = 12 \text{ ksi}$$

According to AISC, ASD, TABLE J2.4, page 5-67, knowing the fillet weld size is 1/4"

Therefore, the allowable load in kips/in is equal to

$$12 \times 0.707 \times 1/2 = 4.2 \text{ kips/in}.$$

the safety factor is

$$\frac{4.2}{3.6} = 1.2$$

o DESIGN THE WELD BETWEEN THE PLATE & TUBING

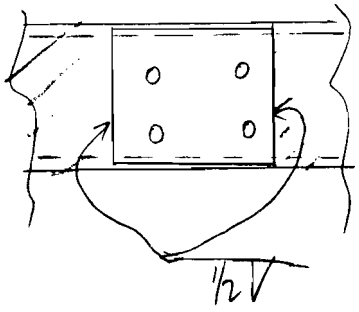

- FIND THE FORCE ON THE WELDS:

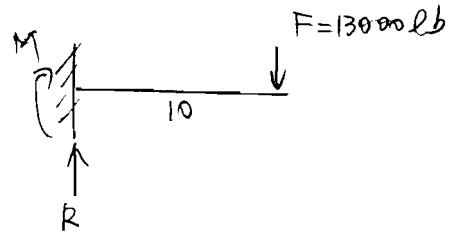

$M = F \times 10 = 13000 \times 10 = 130000$ lb·in

$R = F = 13000$ lb

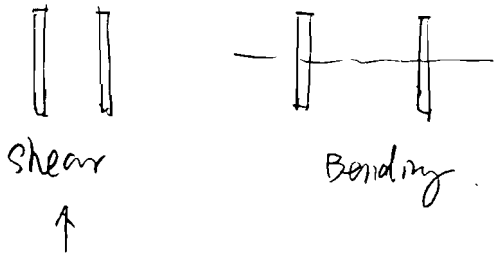

<u>Shear</u>: $f_v = \frac{V}{A_w}$ where $V = 13000$ lb

$A_w = 10 \times 2 = 20$ in

$$f_v = \frac{13000}{20} = 650 \text{ lb/in}$$

- Bending:

$$f_b = \frac{M}{S_W} \quad \text{where } M = 130000 \text{ lb-in}$$

$$S_W = \frac{d^2}{3} \quad \text{where } d = 10 \text{ in}$$

$$= \frac{10^2}{3}$$

$$= 33.33 \text{ in}^2$$

$$f_b = \frac{130000}{33.33} = 3900.39 \text{ lb/in}$$

O FIND THE WELD SIZE BY USING ALLOWABLES:

According to "Design of welded structure" Blodget, section 7.4, page 7.4-7, knowing:

The resultant force is

$$f_r = \sqrt{f_v^2 + f_b^2}$$

$$= \sqrt{650^2 + 3900.39^2}$$

$$= 3954 \text{ lb/in}$$

$$= 3.954 \text{ kips/in}$$

According to AISC, ASD, TABLE J2.5, page 5-70, knowing the allowable stress on welds is the same as base metal.

According to ANSI/ASME, B30.20-1993, Below the Hook Lifting Device, knowing.

The allowable stress is equal to one third of yielding stress

$\frac{1}{3}F_y = \frac{1}{3} \times 36 = 12\,ksi$ where $F_y = 36\,ksi$ for A36.

According to AISC, ASD, Table J2.4, page 5-67, knowing, the fillet weld size is $1/2''$

Therefore, the allowable load in kips/in is equal to

$$12 \times 0.707 \times 1/2 = 4.2 \text{ Kips/in}$$

the safety factor is

$$\frac{4.2}{3.954} = 1.06$$

In conclusion, the design as shown is adequate to carry the loads

[redacted]

1) LUG 28 lb

2) GUSSET:

$7'' \times 3.5'' \times 3/8'' \times (2) \longrightarrow 2.6$ lb

Total weight $= 28 + 2.6$

$= 30.6$ lb