[redacted]

For lug against the horizontal [redacted]

From the ansys results, knowing the worst combination loading at point B is :

| | |
|---|---|
| ELEMENT 124-0° | $F_x = 2646.9$ lb |
| ELEMENT 124-0° | $F_y = 1660.6$ lb |
| ELEMENT 124-90° | $F_z = 2469.4$ lb |
| ELEMENT 1-90° | $M_x = 18949$ lb-in |
| ELEMENT 124-45° | $M_y = 89099$ lb-in ( Design for welds) |
| ELEMENT 124-0° | $M_z = 45665$ lb-in |

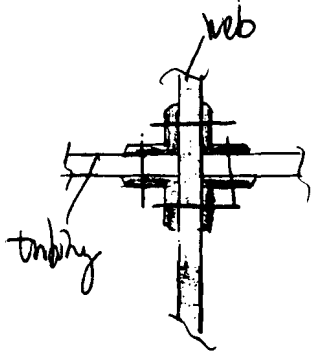


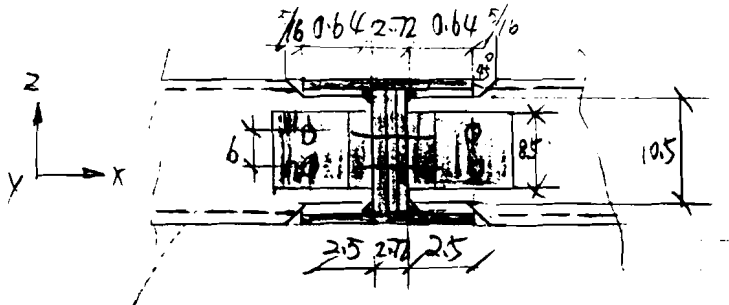


Angle: $L4''\times4''\times3/8''\times8\frac{1}{2}\times4$ (each)

Bolt: A325 – 3/4" dia – 13/16" in holes ×8(ea)

Thus,

shear in x-direction = 2646.9 lb

Tension in y-direction = 1660.6 lb

Shear in z-direction = 2469.4 lb

Tension on top Bolt caused by $M_x$

$$\frac{18949}{6} = 3158.17 \text{ lb}$$

Compression on bottom Bolt caused by $M_x$

$$\frac{18949}{6} = 3158.17 \text{ lb}$$

Tension on left side Bolt caused by $M_z$

$$\frac{45665}{(2.5+2.72+2.5)} = 5915.16 \text{ lb}$$

Therefore:

- Combined shear in x-z plane:

$$\sqrt{2646.9^2 + 2469.4^2} = 3619.95 \text{ lb}$$

- Shear per bolt in x-z plane:

$$\frac{1}{2} \times 3619.95 = 1809.97 \text{ lb}$$

- Combined Tension/compression on Bolt #1

$$\left(\frac{1}{2} \times 1660.6\right) + 3158.17 + \left(\frac{1}{2} \times 5915.16\right) = 6946 \text{ lb}$$

- Combined Tension/compression on Bolt #2

$$\left(\frac{1}{2} \times 1660.6\right) - 3158.17 + \left(\frac{1}{2} \times 5915.16\right) = 629.71 \text{ lb}$$

Bolt #1 is critical because it carries the largest tension load.

- FIND THE COMPUTED SHEAR STRESS $f_v$ (ksi)

From Table 1-A, AISC, ASD, page 4-3

Knowing, A325 Bolt 3/4" dia → $A = 0.4418\ in^2$

$$f_v = \frac{1809.97}{0.4418} = 4.097 ksi$$

- FIND THE ALLOWABLE SHEAR STRESS $F_v$ (ksi)

From Table J3.2, AISC, ASD, page 5-73

When the connection is the bearing type and the threads in the shear plane,

$F_v = 21$ ksi —— governs

According to ANSI/ASME B30.20-1985 Below the Hook Lifting Devices

$F_v = \frac{1}{3} F_y$ where $F_y = 92$ ksi for A325

$F_v = \frac{1}{3} \times 92 = 30.6$ ksi

- FIND THE SAFETY FACTOR ON SHEAR STRESS

$F_v = 21$ ksi

$f_v = 4.097$ ksi

$$SF = \frac{21}{4.097} = 5.1$$

- FIND THE COMPUTED TENSILE STRESS $f_t$ (ksi)

$$f_t = \frac{P}{A} \quad \text{where} \quad P = 6946 \cdot lb$$
$$A = 0.4418 \ in^2$$

$$f_t = \frac{6946}{0.4418} = 15.722 \ ksi$$

- FIND THE ALLOWABLE TENSILE STRESS $F_t$ (ksi)

According to AISC, ASD, Table J3.3, page 5-74, knowing when the connection is bearing type and threads in the shear plane

$$F_t = \sqrt{44^2 - 4.39 f_v^2} \quad \text{where } f_v = 4.097 \ ksi$$

$$F_t = \sqrt{44^2 - 4.39 \times 4.097^2} = 43.15 \ ksi$$

According to ANSI/ASME B30.20-1993 Below the Hook Lifting Devices, knowing:

$$F_t = \frac{1}{3} F_y \quad \text{where } F_y = 92 \ ksi \text{ for A325}$$

$$F_t = \frac{1}{3} \times 92 = 30.6 \ ksi \text{ — governs}$$

- FIND THE SAFETY FACTOR ON TENSILE STRESS

$$f_t = 15.722 \ ksi$$

$$F_t = 30.6 \ ksi$$

$$SF = \frac{F_t}{f_t} = \frac{30.6}{15.722} = 1.9$$

O FIND THE BOLT BEARING STRESS ON CONNECTION MATERIAL

Fp (ksi)

For Tubing 12x4

$t = 0.3125 \times 2 = 0.625$ in

From Table 1-E, AISC, ASD, page 4-6

When $t = 0.625$ Bearing allowable load per bolt

$52.2 \times 0.625 = 32.625$ kips

$$F_p = \frac{32.625}{0.625 \times 0.75} = 69.6 \text{ ksi}$$

For Angles:

$t = 0.375 \times 2 = 0.75$ in

From Table 1-E, AISC, ASD, page 4-6

When $t = 0.75$, Bearing allowable load per bolt

$52.2 \times 0.75 = 39.15$ kips

$$F_p = \frac{39.15}{0.75 \times 0.75} = 69.6 \text{ ksi}$$

According to ANSI/ASME B30.20-1985 Below the Hook Lifting Devices

$F_p = \frac{1}{3} F_y$ where $F_y = 36$ ksi for A36

$F_p = \frac{1}{3} \times 36 = 12$ ksi ——— governs

○ FIND THE COMPUTED BOLT BEARING STRESS ON CONNECTION MATERIAL $f_p$ (ksi)

For Tubing 12x4

$$f_p = \frac{P/n}{dt}$$

" STRUCTRAL STEEL DESIGN "
chapter 18, page 596

where n — number of the fastener
d — nominal fastener diameter
t — thickness of the material

knowing, $P = 3619.95\,lb$
$n = 2$
$d = 0.75\,in$
$t = 0.625\,in$

$$f_p = \frac{3619.95/2}{0.625 \times 0.75} = 3.861\ ksi$$ — governs

For Angles :

$$f_p = \frac{P/n}{dt}$$

where $P = 3619.95\,lb$
$n = 2$
$d = 0.75\,in$
$t = 0.375 \times 2 = 0.75\,in$

$$f_p = \frac{3619.95/2}{0.75 \times 0.75} = 3.218\ ksi$$

O FIND THE SAFETY FACTOR ON BOLT BEARING STRESS

$f_p = 3.861$ ksi

$F_p = 12$ ksi

$SF = \frac{12}{3.861} = 3.1$

O FIND THE ALLOWABLE SHEAR STRESS ON THE NET AREA OF THE CONNECTION ANGLE $R_v$ (ksi)

According to AISC, ASD, J4, page 4-10, for single angle, $R_v = 0.3 F_u$ where $F_u = 58$ ksi for A36

$R_v = 0.3 \times 58 = 17.4$ ksi

According to ANSI/ASME B30.20-1985 Below the Hook Lifting Devices

$R_v = \frac{1}{3} F_y$ where $F_y = 36$ ksi for A36

$R_v = \frac{1}{3} \times 36 = 12$ ksi —— governs

O FIND THE COMPUTED SHEAR STRESS ON NET AREA OF THE CONNECTION ANGLE $\gamma_v$ (ksi)

For single angle,

Shear force $= \frac{1}{2} \times 3619.95 = 1809.97$ lb

net area $= t\,[L - n(d + 0.125)]$

$= 0.375 \times [8.5 - 2(0.75 + 0.125)]$

$= 2.578$ in$^2$

$$\gamma_v = \frac{1809.97}{2.578} = 0.702 \text{ ksi}$$

- FIND THE SAFETY FACTOR ON SHEAR STRESS ON THE NET AREA OF THE CONNECTION ANGLE.

$\gamma_v = 0.702$ ksi

$R_v = 12$ ksi

$$SF = \frac{12}{0.702} = 17$$

- FIND THE ALLOWABLE BENDING STRESS ON THE NET AREA OF THE CONNECTION ANGLE $F_b$ (ksi)

According to AISC, ASD, page 5-46

For non-compact section angles,

$F_b = 0.60 F_y$ where $F_y = 36$ ksi for A36

$F_b = 0.60 \times 36 = 21.6$ ksi

According to ANSI/ASME B30.20-1985 Below the Hook Lifting Devices

$F_b = \frac{1}{3} F_y$ where $F_y = 36$ ksi for A36

$F_b = \frac{1}{3} \times 36 = 12$ ksi — governs

O FIND THE COMPUTED BENDING STRESS ON THE NET AREA OF THE CONNECTION ANGLE. $f_b$ (ksi)

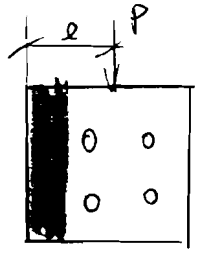


For single angle,

$P = 1809.97\ lb$

$e = 2\frac{1}{2} + \left(\frac{2.72}{2}\right) = 3.86\ in$

$M = Pe$

$= 1809.97 \times 3.86 = 6986.5\ kips\text{-}in$

$S_{net} = 3.1259\ in^3$

$$f_b = \frac{M}{S_{net}} = \frac{6986.5}{3.1259} = 2.235\ ksi$$

O FIND THE SAFETY FACTOR ON BENDING STRESS ON THE NET AREA OF THE CONNECTION ANGLE.

$f_b = 2.235\ ksi$

$F_b = 12\ ksi$

$$SF = \frac{12}{2.235} = 5.4$$

— CHECK THE DEFLECTION ON SIDE WALL OF 12x4 TUBING

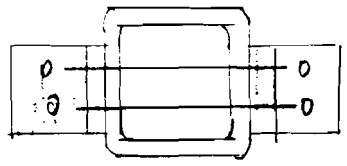

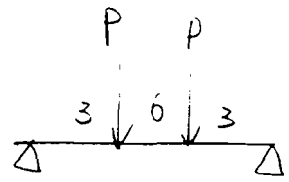


From the previous study, knowing: $P = 6946$ lb.

According to AISC, ASD, Beam Diagrams, page 2-298, knowing, the maximum deflection at center is

$$\Delta_{max} = \frac{Pa}{24EI}\left(3l^2 - 4a^2\right)$$

where $P = 6946$ lb

$a = 3$ in

$E = 29 \times 10^6$

$$I = \frac{bh^3}{12} = \frac{4 \times (0.3125^3 + 0.375^3)}{12}$$

$= 0.028$ in$^4$

$l = 12$ in

$$\Delta_{max} = \frac{6946 \times 3}{24 \times 29 \times 10^6 \times 0.028}\left(3 \times 12^2 - 4 \times 3^2\right)$$

$= 0.423$ in

— CHECK THE BENDING STRESS ON SIDE WALL OF 12x4 TUBING:

From previous study, knowing $P = 6946$ lb.

According to AISC, ASD, Beam Diagrams, page 2-298, knowing, the maximum moment between the loads is

$$M_{max} = Pa$$

where $P = 6946$ lb

$a = 3$ in

$$M_{max} = 6946 \times 3 = 20838 \text{ lb-in}$$

According to ANSI/ASME, B30.20-1993, Below the Hook Lifting Devices, knowing:

the allowable bending stress is

$$F_b = \frac{1}{3} F_y \quad \text{where } F_y = 36 \text{ ksi for A36}$$

$$= \frac{1}{3} \times 36 = 12 \text{ ksi}$$

○ FIND THE REQUIRED SECTION MODULUS $S_x$ ($in^3$)

$$F_b = \frac{M}{S_x} \longrightarrow S_x = \frac{M}{F_b}$$

where $M = 20838$ lb-in

$F_b = 12000$ psi

$$S_x = \frac{20838}{12000} = 1.7 \text{ in}^3$$

Knowing: the tubing wall section modulus is

$$(S_x)_{wall} = \frac{bh^2}{6}$$

where $b = 4$ in

$h = 0.3125$ in

$$(S_x)_{wall} = \frac{4 \times 0.3125^2}{6} = 0.065 \text{ in}^3$$

Knowing: the angle leg section modulus is

$$(S_x)_{angle} = \frac{bh^2}{6}$$

where $b = 4$ in

$h = 0.375$ in

$$(S_x)_{angle} = \frac{4 \times 0.375^2}{6} = 0.094 \text{ in}^3$$

Therefore:

$$\Delta S_x = S_x - (S_x)_{wall} - (S_x)_{angle}$$

$$= 1.7 - 0.065 - 0.094$$

$$= 1.578 \text{ in}^3$$

O FIND THE PLATE THICKNESS DUE TO THE REQUIRED SECTION MODULUS $\Delta S_x$

Knowing $\Delta S_x = 1.578 \text{ in}^3$

$$\Delta S_x = \frac{bh^2}{6} \qquad \text{where } b = 4 \text{ in}$$

Then:

$$h = \sqrt{\frac{6 \Delta S_x}{b}} = \sqrt{\frac{6 \times 1.578}{4}} = 1.54 \text{ in}$$

— Propose to use the following alternative method to eliminate the larger compressive stress on the wall.

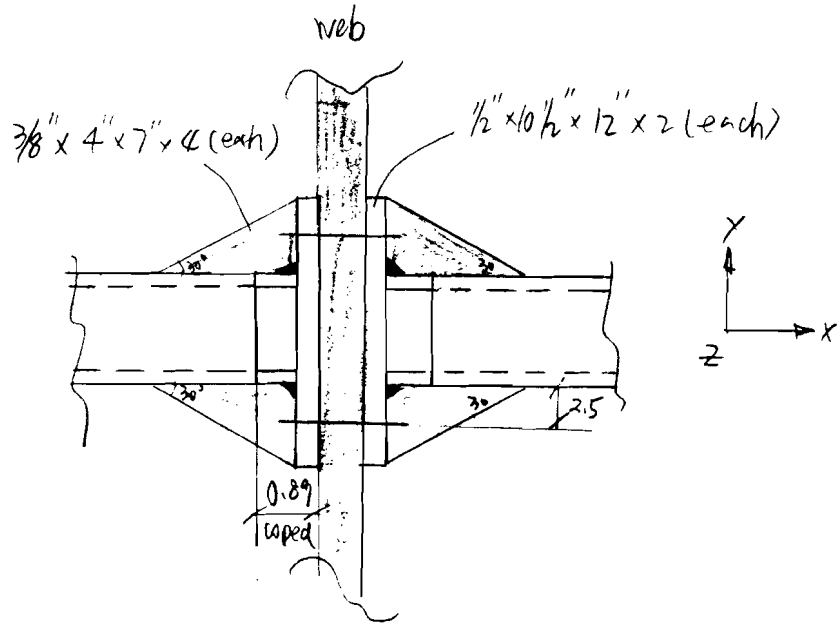


Bolt: A325 – 3/4" dia – 13/16" in holes x 4 (each)

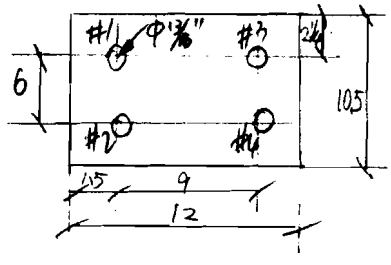


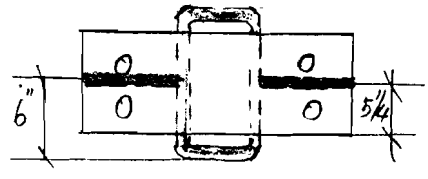


Plate: 1/2" x 10 1/2" x 12" x 2 (ea)

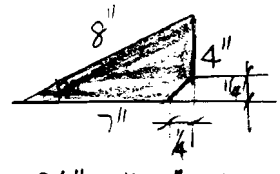


3/8" x 4" x 7" x 4 (each)

From the ansys results, knowing:

$F_x = 2646.9$ lb

$F_y = 1660.9$ lb

$F_z = 2469.4$ lb

$M_x = 18949$ lb-in

$M_y = 89099$ lb-in (Design for welds)

$M_z = 45665$ lb-in

Thus,

Tension in x-direction = 2646.9 lb

Shear in y-direction = 1660.6 lb

Shear in z-direction = 2469.4 lb

Shear caused by $M_x$ in z-direction

$$\frac{18949}{9} = 2105.44 \text{ lb}$$

Tension on the top bolts caused by $M_z$

$$\frac{45665}{9} = 5073.88 \text{ lb}$$

Compression on the bottom bolts caused by $M_z$

$$\frac{45665}{9} = 5073.88 \text{ lb}$$

Therefore,

- Combined shear in Z-direction:

$$2469.4 + 2105.44 = 4574.84 \text{ lb}$$

- Resultant shear in X-Z plane:

$$\sqrt{1660.6^2 + 4574.84^2} = 4866.9 \text{ lb}$$

- shear per bolt

$$\tfrac{1}{4} \times 4866.9 = 1216.73 \text{ lb}$$

- Combined Tension / compression on bolt #1

$$(\tfrac{1}{4} \times 2646.9) + (\tfrac{1}{2} \times 5073.88) = 3198.67 \text{ lb}$$

- Combined Tension / compression on bolt #2

$$(\tfrac{1}{4} \times 2646.9) + (\tfrac{1}{2} \times 5073.88) = 3198.67 \text{ lb}$$

- Combined Tension / compression on bolt #3

$$(\tfrac{1}{4} \times 2646.9) - (\tfrac{1}{2} \times 5073.88) = -1875.215 \text{ lb}$$

- Combined Tension / compression on bolt #4

$$(\tfrac{1}{4} \times 2646.9) - (\tfrac{1}{2} \times 5073.88) = -1875.215 \text{ lb}$$

Bolts #1 & #2 are critical because they carry the largest tension load.

O FIND THE COMPUTED SHEAR STRESS $f_v$ (ksi)

From Table 1A, AISC, ASD, page 4-3

knowing, A325 Bolt 3/4" dia $\longrightarrow$ $A = 0.4418\ in^2$

$$f_v = \frac{1216.73}{0.4418} = 2.754\ ksi$$

O FIND THE ALLOWABLE SHEAR STRESS $F_v$ (ksi)

From Table J3.2, AISC, ASD, page 5-73

When the connection is the bearing type and the threads in the shear plane

$F_v = 21$ ksi —— governs

According to ANSI/ASME B30.20-1985 Below the Hook Lifting Devices

$F_v = \frac{1}{3} F_y$ where $F_y = 92$ ksi for A325

$F_v = \frac{1}{3} \times 92 = 30.6$ ksi

O FIND THE SAFETY FACTOR ON SHEAR STRESS

$F_v = 21$ ksi

$f_v = 2.754$ ksi

$$SF = \frac{21}{2.754} = 7.6$$

- FIND THE COMPUTED TENSILE STRESS $f_t$ (ksi)

$$f_t = \frac{P}{A} \quad \text{where } P = 3198.67 \text{ lb}$$
$$A = 0.4418 \text{ in}^2$$
$$f_t = \frac{3198.67}{0.4418} = 7.24 \text{ ksi}$$

- FIND THE ALLOWABLE TENSILE STRESS $F_t$ (ksi)

According to AISC, ASD, Table J3.3, page 5-74, knowing when the connection is bearing type and threads in the shear plane

$$F_t = \sqrt{44^2 - 4.39 f_v^2} \quad \text{where } f_v = 2.754 \text{ ksi}$$
$$F_t = \sqrt{44^2 - 4.39 \times 2.754^2} = 43.62 \text{ ksi}$$

According to ANSI/ASME B30.20-1993 Below the Hook Lifting Devices, knowing.

$$F_t = \frac{1}{3} F_y \quad \text{where } F_y = 92 \text{ ksi for A325}$$
$$F_t = \frac{1}{3} \times 92 = 30.6 \text{ ksi} \text{ — governs}$$

- FIND THE SAFETY FACTOR ON TENSILE STRESS

$$f_t = 7.24 \text{ ksi}$$
$$F_t = 30.6 \text{ ksi}$$
$$SF = \frac{F_t}{f_t} = \frac{30.6}{7.24} = 4.2$$

○ FIND THE BOLT BEARING STRESS ON CONNECTING MATERIAL $F_p$ (ksi)

For plate on the tubing 12x4

$t = 0.5$ in

From Table 1-E, AISC, ASD, page 4-6

when $t = 0.5$ in, Bearing allowable load per bolt

$52.2 \times 0.5 = 26.1$ kips

$$F_p = \frac{26.1}{0.5 \times 0.75} = 69.6 \text{ ksi}$$

For web.

$t = 0.72$ in

From Table 1-E, AISC, ASD, page 4-6

when $t = 0.72$, Bearing allowable load per bolt

$52.2 \times 0.72 = 37.584$ kips

$$F_p = \frac{37.584}{0.75 \times 0.72} = 69.6 \text{ ksi}$$

According to ANSI/ASME B30.20-1985 Below the Hook Lifting Devices,

$F_p = \frac{1}{3} \times F_y$ where $F_y = 36$ ksi for A36

$F_p = \frac{1}{3} \times 36 = 12$ ksi —— governs

- FIND THE COMPUTED BOLT BEARING STRESS ON CONNECTING MATERIAL $f_p$ (ksi)

For plate on the tubing 12x4

$$f_p = \frac{P/n}{dt}$$

"STRUCTURAL STEEL DESIGN"
Chapter 18, page 596

Where n — number of the fastener
d — nominal fastener diameter
t — thickness of the material

Knowing, $P = 4866.9$ lb
$n = 4$
$d = 0.75$ in
$t = 0.5$ in

$$f_p = \frac{4866.9/4}{0.75 \times 0.5} = 3.245 \text{ ksi}$$ — governs

For web,

$$f_p = \frac{P/n}{dt}$$

where $P = 4866.9$ lb
$n = 4$
$d = 0.75$ in
$t = 0.72$ in

$$f_p = \frac{4866.9/4}{0.75 \times 0.72} = 2.253 \text{ ksi}$$

O FIND THE SAFETY FACTOR ON BOLT BEARING STRESS

$f_p = 3.245$ ksi

$F_p = 12$ ksi

$SF = \frac{12}{3.245} = 3.7$

O FIND THE ALLOWABLE SHEAR STRESS ON THE NET AREA OF THE CONNECTION PLATE $R_v$ (ksi)

According to AISC, ASD, J4, Page 4-10, for single angle,

$R_v = 0.3 F_u$ where $F_u = 58$ ksi for A36

$R_v = 0.3 \times 58 = 17.4$ ksi

According to ANSI/ASME B30.20-1985 Below the Hook Lifting Devices

$R_v = \frac{1}{3} F_y$ where $F_y = 36$ ksi for A36

$R_v = \frac{1}{3} \times 36 = 12$ ksi —— governs

O FIND THE COMPUTED SHEAR STRESS ON THE NET AREA OF THE CONNECTION ANGLE $\gamma_v$ (ksi)

For single angle,

Shear force = 4866.9 lb

net area = $t\,[L - n(d + 0.125)]$

$= 0.5 \times [10.5 - 2(0.75 + 0.125)]$

$= 4.375$ in$^2$

$$\gamma_v = \frac{4866.9}{4.375} = 1.112 \text{ ksi}$$

- FIND THE SAFETY FACTOR ON SHEAR STRESS ON THE NET AREA OF THE CONNECTING PLATE.

$$\gamma_v = 1.112 \text{ ksi}$$

$$R_v = 12 \text{ ksi}$$

$$SF = \frac{12}{1.112} = 10.8$$

- DETERMIND THE LENGTH OF THE BOLTS.

* Bolt: 3/4-10-UNC-2A TYPE 1 (medium carbon steel)
  HEX HEIGHT 1/2"
* NUT: A194 grade 2 for Bolt 3/4" dia hardened.
  NUT HEIGHT 3/4"
* WASHER: F436 hardened flat washer for Bolt 3/4" dia.
  WASHER HEIGHT 5/32"

Bolt length = the total thickness of all connected material + Grip + washer

$$= (1/2 + 1/2 + 2.72) + (1) + (5/32)$$

$$= 4.876 \text{ in}$$

use 5" long

Bolt: 3/4-10 UNC-2A - 5" LONG × 8 (each)

— DESIGN THE WELD BETWEEN THE PLATE & COPED TUBING 12x4

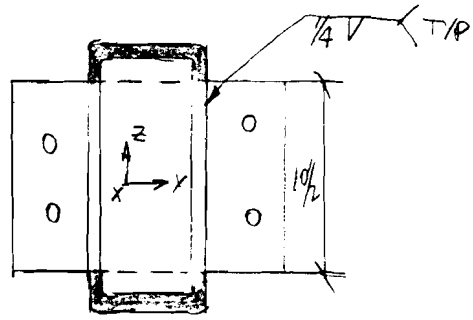


WELDS: E70XX

From previous study, knowing

$F_x = 2646.9$ lb (Tension)

$F_y = 1660.9$ lb (Shear)

$F_z = 2469.4$ lb (Shear)

$M_x = 189.49$ lb-in (Torsion)

$M_z = 45665$ lb-in (Bending)

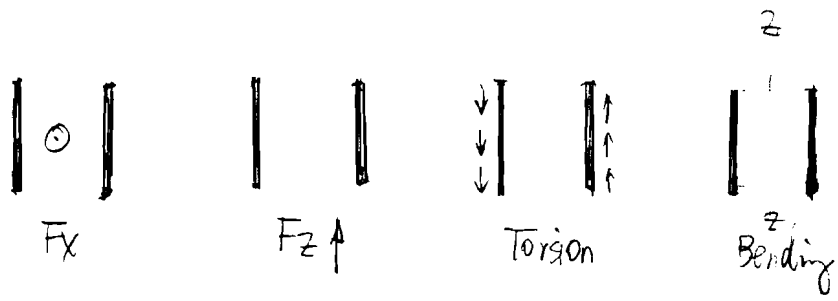


According to "Design of welded structures" Blodgett, Section 7.4-7, page 7.4-7, Table 5. "Properties of weld treated as Line", knowing:

— Bending about z-z: $S_z = b \cdot d$

Where $b = 10.5$ in

$d = 4$ in

$S_z = 10.5 \times 4 = 42$ in$^2$

— Twisting:

$$J = \frac{d(3b^2+d^2)}{6}$$

where $d = 10.5\ in$

$b = 4\ in$

$$J = \frac{10.5(3\times 4^2+10.5^2)}{6} = 276.94\ in^3$$

O DETERMINING FORCE ON WELD

Tension:

$$f_x = \frac{P}{A_W}$$ where $P = 2646.9\ lb$

$A_W = 10.5\times 2 = 21\ in$

$$f_x = \frac{2646.9}{21} = 126.04\ lb/in$$

Shear:

$$f_z = \frac{V}{A_W}$$ where $V = 2469.4\ lb$

$A_W = 10.5\times 2 = 21\ in$

$$f_z = \frac{2469.4}{21} = 117.6\ lb/in$$

twisting:

$$f_{Tz} = \frac{TC}{J}$$ where $T = 18949\ lb\text{-}in$

$C = \frac{10.5}{2} = 5.25\ in$

$J = 276.94\ in^3$

$$f_{Tz} = \frac{18949\times 5.25}{276.94} = 359.22\ lb/in$$

Bending:

$$f_x' = \frac{M}{S_z} \quad \text{where } M = 45665 \text{ lb-in}$$
$$S_z = 42 \text{ in}^2$$

$$f_x' = \frac{45665}{42} = 1087.26 \text{ lb/in}$$

0 DETERMINE WELD SIZE BY USING ALLOWABLES:

According to "Design of welded structures" Blodget, section 7.4, page 7.4-7, Rinoming:

The resultant force is equal to the square root of the sum of the squares of these **two** forces

$$f_r = \sqrt{f_1^2 + f_2^2}$$
$$= \sqrt{(f_x + f_x')^2 + (f_z + f_{cz})^2}$$
$$= \sqrt{(126.04 + 1087.26)^2 + (117.6 + 359.22)^2}$$
$$= 1303.63 \text{ lb/in}$$
$$= 1.304 \text{ kips/in}$$

According to AISC, ASD, Table J2.4, page 5-67, knowing, the effective throat thickness for fillet weld is 1/4".

According to AISC, ASD, Table J2.5, page 5-70, knowing the allowable stress on welds is the same as base metal.

According to ANSI/ASME, B30.20-1993, Below the Hook Lifting Devices, knowing:

the allowable stress is equal to 1/3 Fy.

Where Fy = 36 ksi for A36

$\frac{1}{3}Fy = \frac{1}{3} \times 36 = 12 \text{ ksi}$

Therefore, the allowable loads in kips/in is equal to

$12 \times 0.707 \times 1/4 = 2.121 \text{ kips/in}$.

$SF = \frac{2.121}{1.304} = 1.6$

— DESIGN THE WELD BETWEEN THE PLATE & TRIANGULAR PLATE:

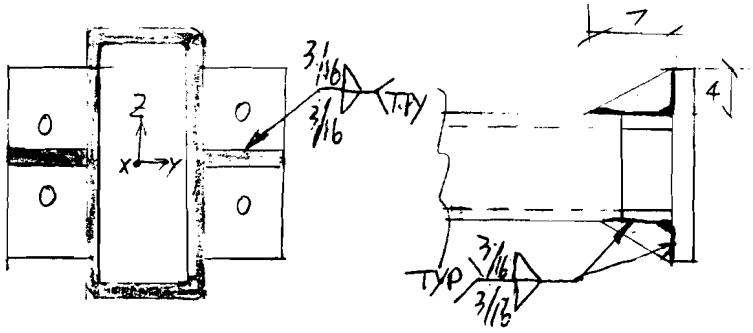


WELDS: E70XX

From previous study, knowing:

$F_y = 1660.9$ lb (shear).

O DETERMINE FORE ON WELD

Tension:

$$f_y = \frac{P}{A_W}$$

where $P = 1660.9$ lb

$A_W = 2(4+4) = 16$ in

$$f_y = \frac{1660.9}{16} = 103.4 \text{ lb/in}$$

$$= 0.103 \text{ kip/in}$$

O DETERMINE WELD SIZE BY USING ALLOWABLES:

According to AISC, ASD, Table J2.4, page 5-67, knowing, the effective throat thickness for fillet weld is 3/16".

According to AISC, ASD, Table J2.5, Page 5-70, knowing. the allowable stress on welds is the same as base metal.

According to ANSI/ASME, B30.20-1993, Below the Hook Lifting Devices, knowing:

the allowable stress is equal to $\frac{1}{3}F_y$

where $F_y = 36$ ksi for A36

$$\frac{1}{3}F_y = \frac{1}{3} \times 36 = 12 \text{ ksi}$$

Therefore, the allowable loads in kips/in is equal to

$$12 \times 0.707 \times 3/16 = 1.59 \text{ kips/in}$$

$$SF = \frac{1.59}{0.103} = 15.4$$

~~DESIGN THE MOMENT CONNECTION DUE TO My & Mx !!~~

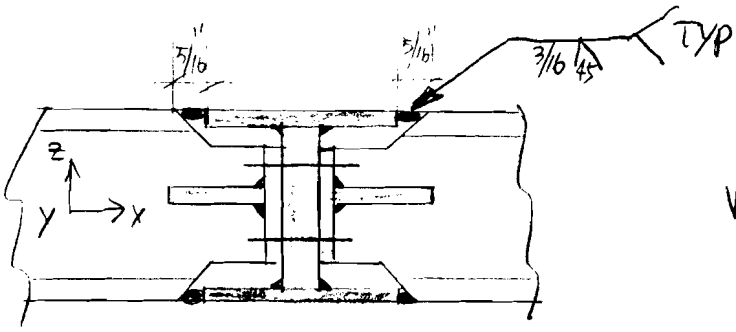


Groove depth : 1/4

WELDS : E70XX

From previous study, knowing

$M_x = 18949$ lb-in (shear)

$M_y = 89099$ lb-in (Bending)

According to "Design of welded structures" Blodgett, Section 7.4-7, Page 7.4-7, Table 5. "properties of weld treated as Line". knowing:

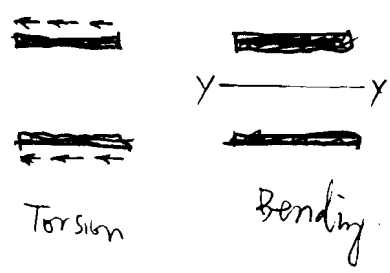


Torsion : $J = \dfrac{b^3 + 3bd^2}{6}$

Where $b = 4$ in

$d = 11.99$ in

$$J = \frac{4^3 + 3 \times 4 \times 11.99^2}{6} = 298.19 \text{ in}^3$$

<u>Bending:</u> $S_y = bd$

where $b = 4$ in

$d = 11.99$ in

$S_y = 4 \times 11.99 = 47.96 \quad in^2$

O DETERMINE FORE ON WELD

<u>twisting</u> $f_{ty} = \frac{TC}{J}$

where $T = 18949$ lb-in

$C = \frac{4}{2} = 2$ in

$J = 298.19 \ in^3$

$f_{ty} = \frac{18949 \times 2}{298.19} = 127.09$ lb/in

<u>Bending</u>

$f_x = \frac{M}{S_y}$

Where $M = 89099$ lb-in

$S_y = 47.96 \ in^2$

$f_x = \frac{89099}{47.96} = 1857.78$ lb/in

## DETERMINE WELD SIZE BY USING ALLOWABLES:

According to "DESIGN of WELDED STRUCTURES" Blodgett, Section 7.4, page 7.4-7, knowing:

The resultant force is equal to the square root of the sum of the squares of these two forces.

$$f_r = \sqrt{f_1^2 + f_2^2}$$
$$= \sqrt{f_x^2 + f_{cy}^2}$$
$$= \sqrt{1857.78^2 + 47.96^2} = 1.858 \text{ Kips/in}$$

According to AISC, ASD, Table J2.1, page 5-66, knowing the effect throat thickness for single bevel-groove weld is 3/16".

According to AISC, ASD, Table J2.5, page 5-70, knowing the allowable stress on welds is the same as base metal.

According to ANSI/ASME B30.20-1993, Below the Hook Lifting Device, knowing:

the allowable stress is equal to $\frac{1}{3}F_y$

where $F_y = 36$ ksi for A36

$$\frac{1}{3}F_y = \frac{1}{3} \times 36 = 12 \text{ ksi}$$

Therefore, the allowable loads in kips/in is equal to

$$12 \times 0.707 \times 3/16 = 1.59 \text{ kips/in}$$

$$< 1.858 \text{ kips/in}$$

N.G.

Propose to add two triangular plates to take the additional load on the welds

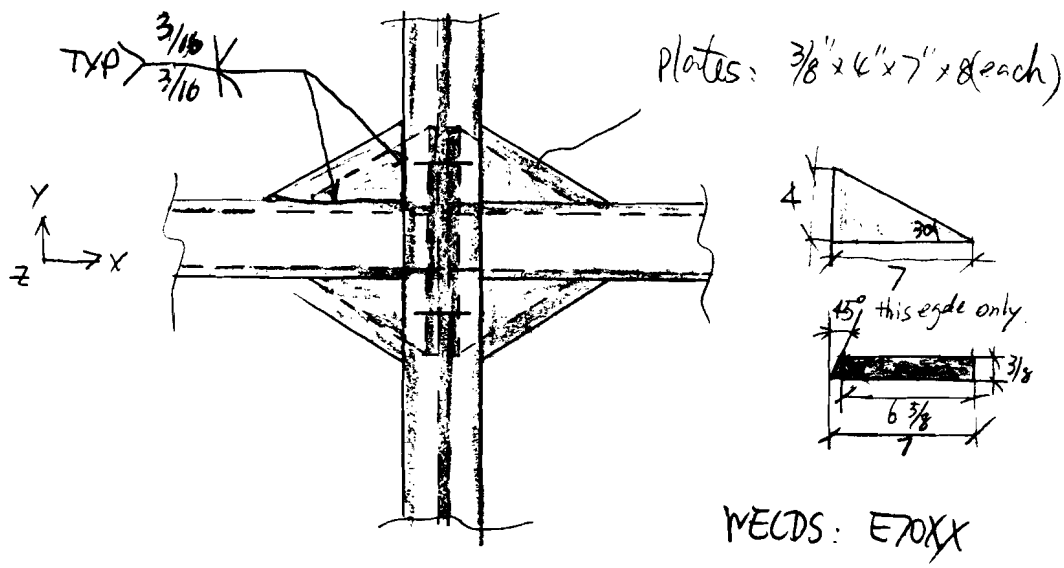


O DETERMINE THE ADDITIONAL LOAD ON THE TRIANGULAR PLATE WELDS.

knowing : $f_v = 1.06$ kips/in, $f_{cy} = 0.048$ kips/in

$$f_v = \sqrt{(f_x)^2 + (f_{cy})^2}$$

$$f_v^2 = f_x^2 + f_{cy}^2$$

Therefore,

$$f_x = \sqrt{f_v^2 - f_{\tau y}^2} = \sqrt{1.06^2 - 0.048^2} = 1.059 \text{ kip/in}.$$

Knowing: $f_x = \frac{M}{S_y} \rightarrow M = f_x S_y$

where $f_x = 1059$ lb/in

$S_y = 47.96$ in$^2$

$$M = 1059 \times 47.96 = 50785 \text{ lb-in}.$$

The additional moment $\Delta M$ will be

$$\Delta M = M_y - M$$

where $M_y = 89099$ lb-in

$M = 50785$ lb-in

$$\Delta M = 89099 - 50785$$
$$= 38314 \text{ lb-in}.$$

— DETERMINE THE FORCE ON WELD

According to "Design of weld structures" Blodgett, Section 7.4-7, page 7.4-7, Table 5 — "properties of weld treated as Line", knowing:

$S_y = bd$

where $b = 4$ in

$d = 11.99$ in

$S_y = 11.99 \times 4 = 47.96$ in$^2$

Bending:

$$f_x = \frac{M}{S_y} \quad \text{where } M = \Delta M \times \frac{1}{2} = 38314 \times \frac{1}{2} = 19157 \text{ lb-in}$$

$$S_y = 47.96 \text{ in}^2$$

$$f_x = \frac{19157}{47.96} = 0.399 \text{ Kips/in}.$$

from previous study, known. for E70XX welds, the allowable load for single bevel groove weld 3/16" is 1.59 Kips/in.

$$SF = \frac{1.59}{0.399} = 4.0$$

Therefore, the sketch as shown above is adequate.

# DESIGN OF WELDED STRUCTURES

PROPERTY OF
PPD/MS LIBRARY
WILSON HALL 11th FLOOR
PLEASE RETURN

THE JAMES F. LINCOLN ARC WELDING FOUNDATION
CLEVELAND, OHIO

Normally the use of these standard design formulas results in a unit stress, psi; however, when the weld is treated as a line, these formulas result in a force on the weld, lbs per linear inch.

For secondary welds, the weld is not treated as a line, but standard design formulas are used to find the force on the weld, lbs per linear inch.

In problems involving bending or twisting loads Table 5 is used to determine properties of the weld treated as a line. It contains the section modulus ($S_w$), for bending, and polar moment of inertia ($J_w$), for twisting, of some 13 typical welded connections with the weld treated as a line.

For any given connection, two dimensions are needed, width (b) and depth (d).

Section modulus ($S_w$) is used for welds subject to bending loads, and polar moment of inertia ($J_w$) for twisting loads.

Section moduli ($S_w$) from these formulas are for maximum force at the top as well as the bottom portions of the welded connections. For the unsymmetrical connections shown in this table, maximum bending force is at the bottom.

If there is more than one force applied to the weld, these are found and combined. All forces which are combined (vectorially added) must occur at the same position in the welded joint.

### *Determining Weld Size by Using Allowables*

Weld size is obtained by dividing the resulting force on the weld found above, by the allowable strength of the particular type of weld used (fillet or groove), obtained from Tables 6 and 7 (steady loads) or Tables 8 and 9 (fatigue loads).

If there are two forces at right angles to each other, the resultant is equal to the square root of the sum of the squares of these two forces.

$$f_r = \sqrt{f_1^2 + f_2^2} \quad \ldots\ldots\ldots\ldots\ldots\ldots (3)$$

If there are three forces, each at right angles to each other, the resultant is equal to the square root of the sum of the squares of the three forces.

$$f_r = \sqrt{f_1^2 + f_2^2 + f_3^2} \quad \ldots\ldots\ldots\ldots\ldots\ldots (4)$$

One important advantage to this method, in addition to its simplicity, is that no new formulas must be used, nothing new must be learned. Assume an engineer has just designed a beam. For strength he has used the standard formula $\sigma = M/S$. Substituting the load on the beam (M) and the property of the beam (S) into this formula, he has found the bending stress ($\sigma$). Now, he substitutes the property of the weld, treating it as a line ($S_w$), obtained from Table 5, into the same formula. Using the same load (M), $f = M/S_w$, he thus finds the force on the weld (f) per linear inch. The weld size is then found by dividing the force on the weld by the allowable force.

**TABLE 5—Properties of Weld Treated as Line**

| Outline of Welded Joint b=width d=depth | Bending (about horizontal axis x-x) | Twisting |
|---|---|---|
| 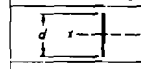 | $S_w = \frac{d^2}{6}$ in.$^2$ | $J_w = \frac{d^3}{12}$ in.$^3$ |
| 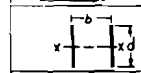 | $S_w = \frac{d^2}{3}$ | $J_w = \frac{d(3b^2+d^2)}{6}$ |
| 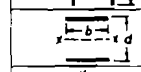 | $S_w = bd$ | $J_w = \frac{b^3+3bd^2}{6}$ |
| 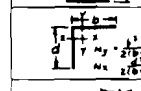 | $S_w = \frac{4bd+d^2}{6}$ top, $= \frac{d^2(4b+d)}{6(2b+d)}$ bottom | $J_w = \frac{(b+d)^4 - 6b^2d^2}{12(b+d)}$ |
| 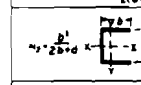 | $S_w = bd + \frac{d^2}{6}$ | $J_w = \frac{(2b+d)^3}{12} - \frac{b^2(b+d)^2}{(2b+d)}$ |
| 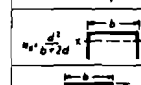 | $S_w = \frac{2bd+d^2}{3}$ top, $= \frac{d^2(2b+d)}{3(b+d)}$ bottom | $J_w = \frac{(b+2d)^3}{12} - \frac{d^2(b+d)^2}{(b+2d)}$ |
| 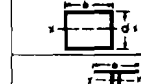 | $S_w = bd + \frac{d^2}{3}$ | $J_w = \frac{(b+d)^3}{6}$ |
| 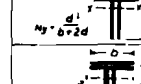 | $S_w = \frac{2bd+d^2}{3}$ top, $= \frac{d^2(2b+d)}{3(b+d)}$ bottom | $J_w = \frac{(b+2d)^3}{12} - \frac{d^2(b+d)^2}{(b+2d)}$ |
| 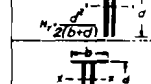 | $S_w = \frac{4bd+d^2}{3}$ top, $= \frac{4bd^2+d^3}{6b+3d}$ bottom | $J_w = \frac{d^3(4b+d)}{6(b+d)} + \frac{b^3}{6}$ |
| 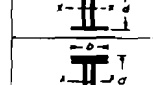 | $S_w = bd + \frac{d^2}{3}$ | $J_w = \frac{b^3+3bd^2+d^3}{6}$ |
| 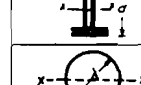 | $S_w = 2bd + \frac{d^2}{3}$ | $J_w = \frac{2b^3+6bd^2+d^3}{6}$ |
| 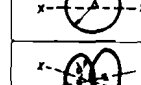 | $S_w = \frac{\pi d^2}{4}$ | $J_w = \frac{\pi d^3}{4}$ |
| 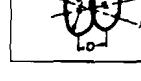 | $I_w = \frac{\pi d}{2}\left(D^2 + \frac{d^2}{2}\right)$, $S_w = \frac{I_w}{c}$, where $c = \frac{\sqrt{D^2+d^2}}{2}$ | |

### *Applying System to Any Welded Connection*

1. Find the position on the welded connection where the combination of forces will be maximum. There may be more than one which should be considered.

2. Find the value of each of the forces on the welded connection at this point. (a) Use Table 4 for the standard design formula to find the force on the weld. (b) Use Table 5 to find the property of the weld treated as a line.

3. Combine (vectorially) all of the forces on the weld at this point.

4. Determine the required weld size by dividing this resultant value by the allowable force in Tables 6, 7, 8, or 9.

**TABLE 4—Determining Force on Weld**

| Type of Loading | | standard design formula stress lbs/in$^2$ | treating the weld as a line force lbs/in |
|---|---|---|---|
| | PRIMARY WELDS transmit entire load at this point | | |
| | tension or compression | $\sigma = \frac{P}{A}$ | $f = \frac{P}{A_w}$ |
| | vertical shear | $\sigma = \frac{V}{A}$ | $f = \frac{V}{A_w}$ |
| 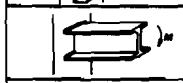 | bending | $\sigma = \frac{M}{S}$ | $f = \frac{M}{S_w}$ |
| 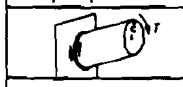 | twisting | $\sigma = \frac{TC}{J}$ | $f = \frac{TC}{J_w}$ |
| | SECONDARY WELDS hold section together - low stress | | |
| | horizontal shear | $\tau = \frac{VAy}{It}$ | $f = \frac{VAy}{In}$ |
| 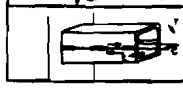 | torsional horizontal shear* | $\tau = \frac{T}{2At}$ | $f = \frac{T}{2A}$ |

A = area contained within median line.
(*) applies to closed tubular section only.

## 6. SIMPLE TENSILE, COMPRESSIVE OR SHEAR LOADS ON WELDS

For a simple tensile, compressive or shear load, the given load is divided by the length of the weld to arrive at the applied unit force, lbs per linear inch of weld. From this force, the proper leg size of fillet weld or throat of groove weld may be found.

## 7. BENDING OR TWISTING LOADS ON WELDS

The problem here is to determine the properties of the welded connection in order to check the stress in the weld without first knowing its leg size. Some design texts suggest assuming a certain weld-leg size and then calculating the stress in the weld to see if it is overstressed or understressed. If the result is too far off, then the weld-leg size is readjusted.

This has the following disadvantages:

1. Some decision must be made as to what throat section is going to be used to determine the property of the weld. Usually some objection can be raised to any throat section chosen.

2. The resulting stresses must be combined and, for several types of loading, this can be rather complicated.

In contrast, the following is a simple method to determine the correct amount of welding required for adequate strength. This is a method in which the weld is treated as a line, having no area, but a definite length and outline. This method has the lowing advantages:

1. It is not necessary to consider throat areas cause only a line is considered.

2. Properties of the welded connection are ea found from a table without knowing weld-leg size.

3. Forces are considered on a unit length of w instead of stresses, thus eliminating the knotty pr lem of combining stresses.

4. It is true that the stress distribution withi fillet weld is complex, due to eccentricity of the plied force, shape of the fillet, notch effect of the r etc.; however, these same conditions exist in the act fillet welds tested and have been recorded as a u force per unit length of weld.

## 8. DETERMINING FORCE ON WELD

Visualize the welded connection as a single line, hav the same outline as the connection, but no cr sectional area. Notice, Figure 14, that the area (A of the welded connection now becomes just the len of the weld.

Instead of trying to determine the stress on weld (this cannot be done unless the weld size known), the problem becomes a much simpler one determining the force on the weld.

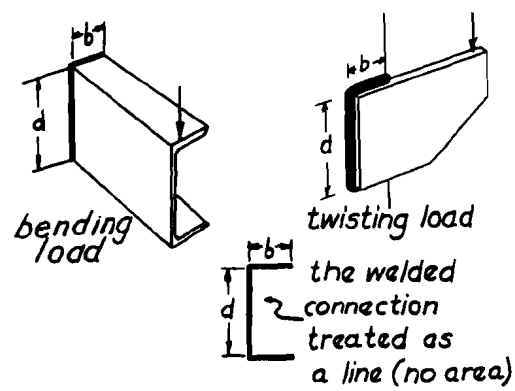


FIG. 14 Treating weld as a line.

By inserting the property of the welded conn tion treated as a line into the standard design form used for that particular type of load (see Table the force on the weld may be found in terms of per linear inch of weld.

***Example:*** Bending

| Standard design formula (bending stress) | Same formula used for we (treating weld as a line |
|---|---|
| $\sigma = \frac{M}{S} = \frac{\text{lbs}}{\text{in.}^2}$ stress | $f = \frac{M}{S_w} = \frac{\text{lbs}}{\text{in.}}$ force |