DESIGN CONNECTIONS AT POINT A & C.

[redacted] the horizontal member W12x16

using the loading condition at points D, I, N, O, P, M, H, A&C.

Knowing: $F_x = 6645.8$ lb

$F_y = 101.38$ lb

$F_z = 653.96$ lb

$M_x = 5568.3$ lb-in

$M_y = 12354$ lb-in (design for weld(s))

$M_z = 3194.6$ lb-in.

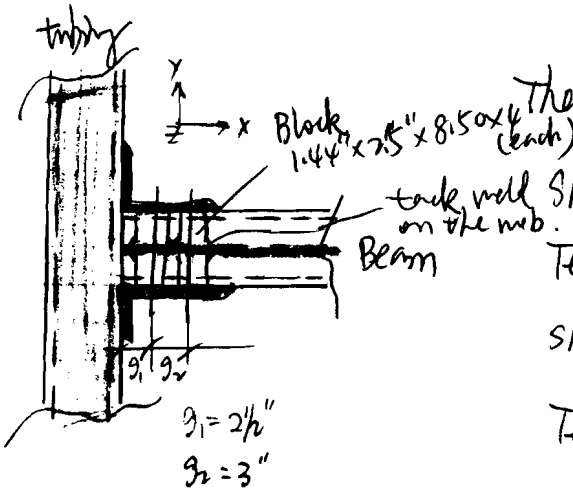

Angle: $L4 \times 7 \times \frac{3}{8} \times 8\frac{1}{2}$

Bolt: A325 – $\frac{3}{4}$" dia – $\frac{13}{16}$" in holes

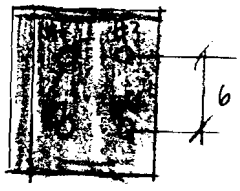

Drill $\phi 1\frac{1}{4}$"

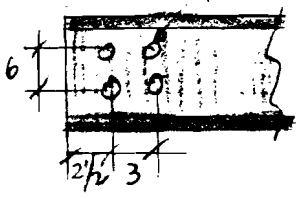

Therefore,

Shear in x-direction = 6645.8 lb

Tension in y-direction = 101.38 lb

shear in z-direction = 653.96 lb

Tension on top bolts caused by M_x

$$\frac{5568.3}{6} = 928.05 \text{ lb}$$

Compression on bottom bolts caused by M_x

$$\frac{5568.3}{6} = 928.05 \text{ lb}$$

Tension on right side bolts caused by M_z

$$\frac{3194.6}{3} = 1064.86 \text{ lb}$$

Compression on left side bolts caused by M_z

$$\frac{3194.6}{3} = 1064.86 \text{ lb}$$

Then,

- Combined shear in x-z plane

$$\sqrt{6645.8^2 + 653.96^2} = 6677.897 \text{ lb}$$

- Combined shear at each bolt

$$\frac{1}{4} \times 6677.897 = 1669.47 \text{ lb}$$

- Combined shear at each connected angle

$$\frac{1}{2} \times 6677.897 = 3338.95 \text{ lb}$$

- Combined Tension/compression on Bolt #1

$$\left(\frac{1}{4} \times 101.38\right) + \left(\frac{1}{2} \times 928.05\right) + \left(\frac{1}{2} \times 1064.86\right) = 1021.8 \text{ lb}$$

- Combined Tension/compression on Bolt #2

$$\left(\frac{1}{4} \times 101.38\right) - \left(\frac{1}{2} \times 928.05\right) + \left(\frac{1}{2} \times 1064.86\right) = 93.75 \text{ lb}$$

- Combined Tension/compression on Bolt #3

$$\left(\frac{1}{4} \times 101.38\right) + \left(\frac{1}{2} \times 928.05\right) - \left(\frac{1}{2} \times 1064.86\right) = -43.06 \text{ lb}$$

- Combined Tension/compression on Bolt #4

$$\left(\frac{1}{4} \times 101.38\right) - \left(\frac{1}{2} \times 928.05\right) - \left(\frac{1}{2} \times 1064.86\right) = -971.11 \text{ lb}$$

Bolts #1 & #2 are critical because they carry the largest tension load.

O FIND THE COMPUTED SHEAR STRESS f_v (ksi)

From Table 1-A, AISC, ASD, page 4-3, knowing

A325 3/4" dia Bolt $\rightarrow$ $A = 0.4418 \text{ in}^2$

$f_v = \frac{P}{A}$ where $P = 1669.47 \text{ lb}$

$A = 0.4418 \text{ in}^2$

$f_v = \frac{1669.47}{0.4418} = 3.778 \text{ ksi}$

O FIND THE ALLOWABLE SHEAR STRESS F_v (ksi)

From Table J3.2, AISC, ASD, page 5-73

When the connection is the bearing type and the threads in the shear plane,

$F_v = 21 \text{ ksi}$ —— governs

According to ANSI/ASME B30.20-1993 Below the Hook Lifting Devices, knowing

$F_v = \frac{1}{3} F_y$ where $F_y = 92 \text{ ksi}$ for A325

$F_v = \frac{1}{3} \times 92 = 30.6 \text{ ksi}$

O FIND THE SAFETY FACTOR ON SHEAR STRESS

$F_v = 21 \text{ ksi}$

$f_v = 3.778 \text{ ksi}$

$SF = \frac{F_v}{f_v} = \frac{21}{3.778} = 3.2$

- FIND THE COMPUTED TENSILE STRESS f_t (ksi)

$$f_t = \frac{P}{A} \quad \text{where } P = 1021.86\,lb$$
$$A = 0.4418\ in^2$$

$$f_t = \frac{1021.86}{0.4418} = 2.312\ ksi$$

- FIND THE ALLOWABLE TENSILE STRESS F_t (ksi)

From Table J3.3, AISC, ASD, page 5-74, knowing, when the connection is the bearing type and the threads in the shear plane,

$$F_t = \sqrt{44^2 - 4.39 f_v^2}$$

where $f_v = 3.778$ ksi

$$F_t = \sqrt{44^2 - 4.39 \times 3.778^2} = 43.28\ ksi$$

According to ANSI/ASME B30.20-1993, Below the Hook Lifting Devices, knowing

$$F_t = \frac{1}{3} F_y \quad \text{where } F_y = 92\ ksi \text{ for A325}$$

$$F_t = \frac{1}{3} \times 92 = 30.6\ ksi \text{ — governs}$$

- FIND THE SAFETY FACTOR ON TENSILE STRESS

$$f_t = 2.312\ ksi$$

$$F_t = 30.6\ ksi$$

$$SF = \frac{F_t}{f_t} = \frac{30.6}{2.312} = 13.2$$

O FIND THE BOLT BEARING STRESS ON CONNECTING MATERIAL

F_p (ksi)

For W12×16 with 2 torsion plate on sides:

$t = 0.25 + 0.25 = 0.50$ in

From Table 1-E, AISC, ASD, page 4-6, knowing when $t = 0.5$, Bearing allowable load per bolt is

$52.2 \times 0.50 = 26.1$ kips

From "STRUCTURAL STEEL DESIGN" chapter 18, page 596, knowing:

$$F_p = \frac{P/n}{dt}$$

where P — shear force, lb

n — number of the fastener

t — thickness of material

d — nominal fastener diameter

when $P = 26.1$ kips

$n = 1$

$t = 0.5$ in

$d = 0.75$ in

$$F_p = \frac{26.1 \times 1}{0.75 \times 0.5} = 69.6 \text{ ksi}$$

For Angles:

$t = 0.75$ in from previous study above, knowing

$F_p = 69.6$ ksi

According to ANSI/ASME, B30.20-1993 Below the Hook Lifting Devices

$F_p = \frac{1}{3} F_y$ where $F_y = 36$ ksi for A36

$F_p = \frac{1}{3} \times 36 = 12$ ksi — governs.

- FIND THE COMPUTED BOLT BEARING STRESS ON CONNECTING MATERIAL f_p (ksi)

For W12x16 with 2 plates, known:

$$f_p = \frac{P/n}{dt}$$

where: $P = 6677.9$ lb
$n = 4$
$d = 0.75$ in
$t = 0.25 \times 2 = 0.5$ in

$$f_p = \frac{6677.9/4}{0.75 \times 0.5} = 4.452 \text{ ksi}$$ — governs

For Angles, known:

$$f_p = \frac{P/n}{dt}$$

where: $P = 6677.9$ lb
$n = 4$
$d = 0.75$ in
$t = 0.375 \times 2 = 0.75$ in

$$f_p = \frac{6677.9/4}{0.75 \times 0.75} = 2.968 \text{ ksi}$$

- FIND THE SAFETY FACTOR ON BOLT BEARING STRESS

$f_p = 4.452$ ksi
$F_p = 12$ ksi

$$SF = \frac{F_p}{f_p} = \frac{12}{4.452} = 2.7$$

O FIND THE ALLOWABLE SHEAR STRESS ON THE NET AREA OF THE CONNECTING ANGLE R_v (ksi)

According to AISC, ASD, J4, Page 4-10, for single angle, having

$R_v = 0.3 F_u$ where $F_u = 58$ ksi for A36

$R_v = 0.3 \times 58 = 17.4$ ksi

According to ANSI/ASME, B30.20-1993 Below the Hook Lifting Devices

$R_v = \frac{1}{3} F_y$ where $F_y = 36$ ksi for A36

$R_v = \frac{1}{3} \times 36 = 12$ ksi —— governs

O FIND THE COMPUTED SHEAR STRESS ON THE NET AREA OF THE CONNECTING ANGLE γ_v (ksi)

For single angle:

shear force = 3338.95 lb

$S_{net} = t[L - n(d + 0.125)]$

where $t = 0.375$ in

$L = 8.5$ in

$n = 2$

$d = 0.75$ in

$S_{net} = 0.375[8.5 - 2(0.75 + 0.125)]$

$= 2.578$ in^2

$\gamma_v = \frac{3338.95}{2.578} = 1.295$ ksi

O FIND THE SAFETY FACTOR ON SHEAR STRESS ON THE NET AREA OF THE CONNECTING ANGLE

$\gamma_v = 1.295$ ksi

$R_v = 12$ ksi

$$SF = \frac{R_v}{\gamma_v} = \frac{12}{1.295} = 9.3$$

O FIND THE ALLOWABLE BENDING STRESS ON THE NET AREA OF THE CONNECTING ANGLE F_b (ksi)

According to AISC, ASD, page 5-46

For non-compact section angles,

$F_b = 0.60 F_y$ where $F_y = 36$ ksi for A36

$F_b = 0.60 \times 36 = 21.6$ ksi

According to ANSI/ASME B30.20-1983 Below the Hook Lifting Devices

$F_b = \frac{1}{3} F_y$ where $F_y = 36$ ksi for A36

$F_b = \frac{1}{3} \times 36 = 12$ ksi — governs

O FIND THE COMPUTED BENDING STRESS ON THE NET AREA OF THE CONNECTION ANGLE f_b (ksi)

For single angle,

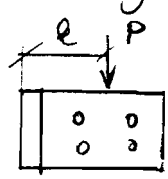

$P = 3338.95$ lb

$e = 2\frac{1}{2} + \frac{1}{2}(3) = 4$ in

$M = Pe = 3338.95 \times 4 = 13355.8$ lb-in

$$S_{net} = \frac{t_p d^2}{6} - \frac{b^2 n (n^2-1)\left[t_p \times (\text{dia of Bolt} + 0.125)\right]}{6d}$$

where t_p = plate thickness, in

d = plate depth, in

n = number of bolts in one vertical row

b = fastener spacing vertically, in

thus, $t_p = 0.375$ in

$d = 8.5$ in

$n = 2$

$b = 6$ in

$S_{net} = 3.1259 \text{ in}^3$

$$f_b = \frac{M}{S_{net}} = \frac{13355.8}{3.1259} = 4.272 \text{ ksi}$$

O FIND THE SAFETY FACTOR ON BENDING STRESS ON THE NET AREA OF THE CONNECTING ANGLE.

$f_b = 4.272$ ksi

$F_b = 12$ ksi

$$SF = \frac{F_b}{f_b} = \frac{12}{4.272} = 2.8$$

— CHECK THE DEFLECTION ON THE TORSIONAL PLATES :

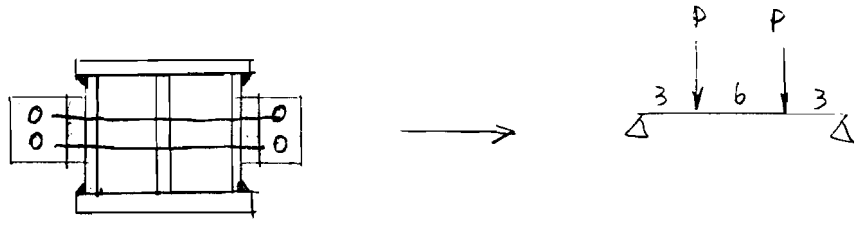

From previous study, knowing $P = 1021.86\ lb$

According to AISC, ASD, Beam Diagrams, page 2-298, knowing: The maximum deflection at center is

$$\Delta_{max} = \frac{Pa}{24EI}\left(3l^2 - 4a^2\right)$$

Where $P = 1021.86\ lb$

$a = 3\ in$

$E = 29 \times 10^6$

$I = \frac{bh^3}{12} = \frac{7 \times (0.375^3 + 0.25^3)}{12} = 0.040\ in^4$

$l = 12\ in$

$$\Delta_{max} = \frac{1021.86 \times 3}{24 \times 29 \times 10^6 \times 0.040}\left(3 \times 12^2 - 4 \times 3^2\right)$$

$$= 0.044\ in$$

- CHECK THE BENDING STRESS ~~ON THE TORSIONAL PLATES~~

From previous study, knowing $P = 1021.86\ lb$

According to AISC, ASD, Beam Diagrams, page 2-298.

knowing: the maximum moment between the loads is

$$M_{max} = Pa$$

where $P = 1021.86\ lb$

$a = 3\ in$

$$M_{max} = 1021.86 \times 3 = 3065.58\ lb\text{-}in.$$

According to ANSI/ASME, B30.10-1993, Below the Hook Lifting Devices, knowing. the allowable Bending stress is $\frac{1}{3}F_y$. where $F_y = 36\ ksi$ for A36.

therefore $F_b = \frac{1}{3}F_y = \frac{1}{3} \times 36 = 12\ ksi$.

O FIND THE REQUIRED SECTION MODULUS S_x (in^3)

$$F_b = \frac{M}{S_x} \longrightarrow S_x = \frac{M}{F_b}.$$

where: $M = 3065.58\ lb\text{-}in$

$F_b = 12000\ psi$

$$S_x = \frac{3065.58}{12000} = 0.255\ in^3$$

knowing: the angle section modulus is

$$(S_x)_{angle} = \frac{bh^2}{6}$$

where $b = 7$ in

$h = 0.375$ in

$$(S_x)_{angle} = \frac{7 \times 0.375^2}{6} = 0.164 \text{ in}^3$$

Therefore:

$$\Delta S_x = S_x - (S_x)_{angle}$$

$$= 0.255 - 0.164 = 0.091 \text{ in}^3$$

0 FIND THE PLATE THICKNESS DUE TO THE REQUIRED SECTION MODULUS ΔS_x.

knowing: $\Delta S_x = 0.091 \text{ in}^3$

$$\Delta S_x = \frac{bh^2}{6}$$

where $b = 7$ in

$$h = \sqrt{\frac{6 \Delta S_x}{b}} = \sqrt{\frac{6 \times 0.091}{7}} = 0.279 \text{ in}$$

use 3/8" plate to replace 1/4" plate.

— CHECK THE DEFLECTION AFTER ADDING THE THICKER PLATE.

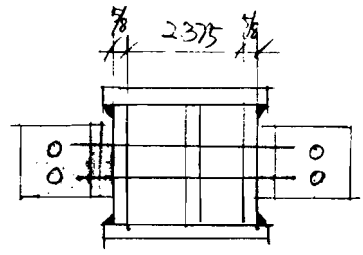

From previous study, knowing:

$$\Delta_{max} = \frac{Pa}{24EI}(3l^2 - 4a^2)$$

where $P = 1021.86\ lb$

$a = 3\ in$

$E = 29 \times 10^6$

$$I = \frac{bh^3}{12} = \frac{7 \times (0.375^3 + 0.375^3)}{12} = 0.062\ in^4$$

$l = 12\ in$

$$\Delta_{max} = \frac{1021.86 \times 3}{24 \times 29 \times 10^6 \times 0.062}(3 \times 12^2 - 4 \times 3^2)$$

$$= 0.028\ in$$

The allowable deflection is:

$$\frac{l}{240} = \frac{12}{240} = 0.050\ in$$

$$SF = \frac{0.050}{0.028} = 1.8$$

The sketch shown above is acceptable.

— DESIGN THE SIDE PLATES:

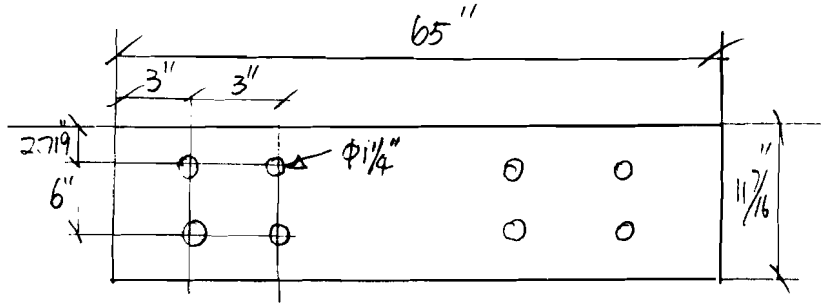

plate. 3/8" × 11 7/16" × 65" × 4 (each)

— DESIGN THE BLOCK:

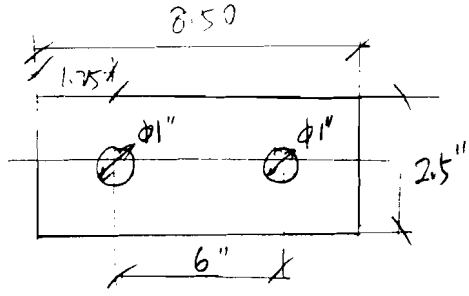

BLOCK. 1.44" × 2.5" × 8.50" × 4 (each)

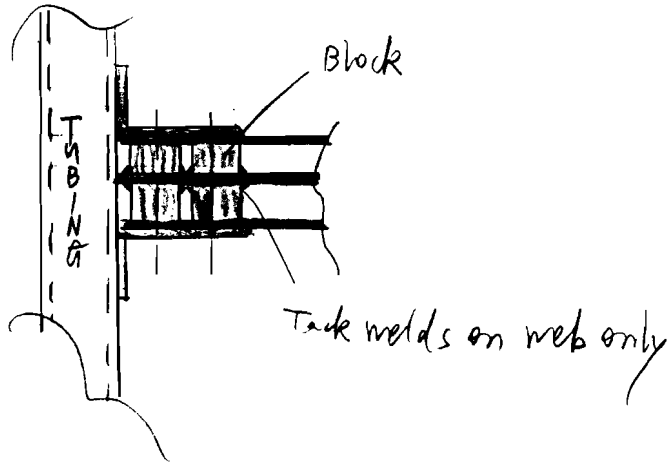

[redacted]

Using the loading condition at points D, I, N, O, P, M, A, N & C

Knowing: $F_x = 6645.8\ lb$

$F_y = 101.38\ lb$

$F_z = 653.96\ lb$

$M_x = 3568.3\ lb\text{-}in$

$M_y = 12354\ lb\text{-}in$ (design for welds)

$M_z = 3194.6\ lb\text{-}in$

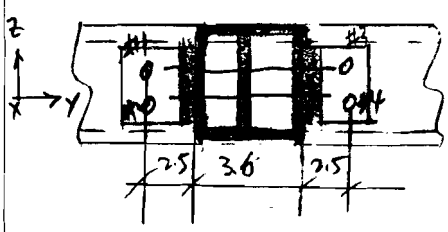

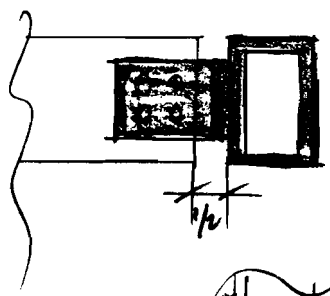

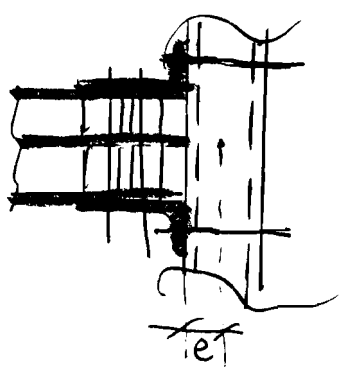

Due to the eccentricity:

1) Tension/compression caused by F_y

$$F_y \times e = T \times d$$

where $e = \frac{1}{2} \times (4) + \frac{1}{2}(0.375)$

$= 2.1875\ in$

$$d = 2 \times 2\tfrac{1}{2} + 3.6 = 8.6\ in$$

$$T = \frac{F_y e}{d} = \frac{101.38 \times 2.1875}{8.6} = 25.8\ lb$$

2) Tension/compression caused by F_z

$$F_z \times e = T' \times d'$$

where $F_z = 653.96\ lb$

$e = 2.1875\ in$

$d' = 6\ in$

$$T' = \frac{F_z e}{d'} = \frac{653.96 \times 2.1875}{6} = 238.4\ lb$$

In addition, loading also occurs:

Tension in x-direction = 6645.8 lb

Shear in y-direction = 101.38 lb

Shear in z-direction = 653.96 lb

Shear caused by M_x in z-direction

$$\frac{5568.3}{9.5} = 586.13 \text{ lb}$$

Tension on the left side bolts caused by M_z

$$\frac{3194.6}{9.5} = 336.27 \text{ lb}$$

Compression on the right side bolts caused by M_z

$$\frac{3194.6}{9.5} = 336.27 \text{ lb}$$

Therefore:

- Combined shear in z direction:

$$653.96 + 586.13 = 1240.09 \text{ lb}$$

- Resultant shear in y-z plane:

$$\sqrt{1240.09^2 + 101.38^2} = 1244.23 \text{ lb}$$

- Combined Tension / compression on Bolt #1

$$\left(\tfrac{1}{4} \times 25.8\right) - \left(\tfrac{1}{4} \times 238.4\right) + \left(\tfrac{1}{4} \times 6645.8\right) + \left(\tfrac{1}{2} \times 336.27\right)$$

$$= 1775.82 \text{ lb}$$

- Combined Tension / compression on Bolt #2

$$(\tfrac{1}{4} \times 25.8) + (\tfrac{1}{4} \times 238.4) + (\tfrac{1}{4} \times 6645.8) + (\tfrac{1}{2} \times 336.27)$$
$$= 1895.02 \text{ lb}$$

- Combined Tension / compression on Bolt #3

$$(-\tfrac{1}{4} \times 25.8) - (\tfrac{1}{4} \times 238.4) + (\tfrac{1}{4} \times 6645.8) - (\tfrac{1}{2} \times 336.27)$$
$$= 1427.88 \text{ lb}$$

- Combined Tension / compression on Bolt #4

$$(-\tfrac{1}{4} \times 25.8) + (\tfrac{1}{4} \times 238.4) + (\tfrac{1}{4} \times 6645.8) - (\tfrac{1}{2} \times 336.27)$$
$$= 1547.08 \text{ lb}$$

Bolt #2 is critical because it carries the longest tension load

- Shear in the bolt

$$\tfrac{1}{4} \times 1244.23 = 311.05 \text{ lb}$$

o FIND THE ALLOWABLE SHEAR STRESS ON THE BOLT F_v (ksi)

From Table J3.2, AISC, ASD, page 5-73, knowing: when connection is the bearing type and threads in the shear plane,

$$F_v = 21 \text{ ksi} \text{ — governs}$$

According to ANSI / ASME B30.20-1993 Below the Hook Lifting Devices

$F_v = \frac{1}{3} F_y$ where $F_y = 92$ ksi for A325

$F_v = \frac{1}{3} \times 92 = 30.6$ ksi

- FIND THE COMPUTED SHEAR STRESS f_v (ksi)

$f_v = \frac{P}{A}$ where $P = 311.05$ lb

$A = 0.4418$ in^2

$f_v = \frac{311.05}{0.4418} = 0.704$ ksi

- FIND THE SAFETY FACTOR ON BOLT SHEAR STRESS

$f_v = 0.704$ ksi

$F_v = 21$ ksi

$SF = \frac{21}{0.704} = 29.8$

- FIND THE ALLOWABLE TENSION STRESS ON BOLT F_t (ksi)

From Table J3.3, AISC, ASD, page 5-74, knowing: When the connection is bearing type and the threads in the shear plane

$F_t = \sqrt{44^2 - 4.39 f_v^2}$

where $f_v = 0.704$

$F_t = \sqrt{44^2 - 4.39 \times 0.704^2} = 43.97$ ksi

According to ANSI/ASME B30.20 – 1993 Below the Hook Lifting Devices,

$F_t = \frac{1}{3} F_y$ where $F_y = 92$ ksi for A325

$F_t = \frac{1}{3} \times 92 = 30.6$ ksi — governs

O FIND THE COMPUTED TENSILE STRESS ON THE BOLT f_t (ksi)

$f_t = \frac{P}{A}$ where $P = 1895.02$ lb

$A = 0.4418$ in^2

$f_t = \frac{1895.02}{0.4418} = 4.289$ ksi

O FIND THE SAFETY FACTOR ON BOLT TENSILE STRESS

$f_t = 4.289$ ksi

$F_t = 30.6$ ksi

$SF = \frac{F_t}{f_t} = \frac{30.6}{4.289} = 7.1$

O FIND THE ALLOWABLE BEARING STRESS ON THE CONNECTING MATERIALS F_p (ksi)

For tubing 12x4, $t = 0.3125 \times 2 = 0.625$ in

from Table 1-E, AISC, ASD, page 4-6, knowing when $t = 0.625$ in, Bearing allowable load per bolt is $52.2 \times 0.625 = 32.625$ kips

knowing: $F_p = \frac{P/n}{dt}$ where $P = 32.625$ kips

$n = 1$

$d = 0.75$ in

$t = 0.625$ in

$$F_p = \frac{32.625}{0.75 \times 0.625} = 69.6 \text{ ksi}$$

For angles: $t = 0.375$ in

From Table 1-E, AISC, ASD, page 4-6, known:

when $t = 0.375$ in, Bearing allowable load per bolt is

$52.2 \times 0.375 = 19.575$ kips

known: $F_p = \frac{P/n}{dt}$ where $P = 19.575$ kips

$n = 1$

$d = 0.75$ in

$t = 0.375$ in

$$F_p = \frac{19.575/1}{0.75 \times 0.375} = 69.6 \text{ ksi}$$

According to ANSI/ASME B30.20-1993, Below the Hook Lifting Devices

$F_p = \frac{1}{3} F_y$ where $F_y = 36$ ksi for A36

$F_p = \frac{1}{3} \times 36 = 12$ ksi — governs

O FIND THE COMPUTED BOLT BEARING STRESS ON CONNECTING MATERIALS f_p (ksi)

For tubing 12x4:

$f_p = \frac{P/n}{dt}$ where $P = 1244.09$ lb

$n = 4$

$d = 0.75$ in

$t = 0.625$ in

$$f_p = \frac{1244.09/4}{0.75 \times 0.625} = 0.664 \text{ ksi}$$

For Angle :

$$f_p = \frac{P/n}{dt} \quad \text{where } P = \tfrac{1}{2} \times 1244.09 = 622.045 \text{ lb}$$

$n = 2$

$d = 0.75$ in

$t = 0.375$ in

$$f_p = \frac{622.045/2}{0.75 \times 0.375} = 1.105 \text{ ksi} \text{ — governs}$$

o FIND THE SAFETY FACTOR ON BOLT BEARING STRESS

$f_p = 1.105$ ksi

$F_p = 12$ ksi

$$SF = \frac{F_p}{f_p} = \frac{12}{1.105} = 10.9$$

o FIND THE ALLOWABLE SHEAR STRESS ON THE NET AREA OF THE CONNECTING ANGLE R_v (ksi)

According to AISC, ASD, J4, page 4-10

$R_v = 0.3 F_u$ for single angle

where $F_u = 58$ ksi for A36

$R_v = 0.3 \times 58 = 17.4$ ksi

According to ANSI-ASME, B30.20-1993, Below the Hook Lifting Devices

$R_v = \frac{1}{3} F_y$ where $F_y = 36$ ksi for A36

$R_v = \frac{1}{3} \times 36 = 12$ ksi —— governs

O FIND THE COMPUTED SHEAR STRESS ON THE NET AREA OF THE CONNECTION ANGLE γ_V (ksi)

For single angle,

$$\text{Shear force} = \frac{1}{2} \times 1244.23 = 622.12 \text{ lb}$$

$$S_{net} = t[L - n(d + \tfrac{1}{16})]$$

$$= 0.375 \times [8.5 - 2(0.75 + 0.125)]$$

$$= 2.578 \text{ in}^2$$

$$\gamma_V = \frac{622.12}{2.578} = 0.241 \text{ ksi}$$

O FIND THE SAFETY FACTOR ON SHEAR STRESS ON THE NET AREA OF THE CONNECTION ANGLE

$$\gamma_V = 0.241 \text{ ksi}$$

$$R_V = 12 \text{ ksi}$$

$$SF = \frac{12}{0.241} = 50$$

O FIND THE ALLOWABLE BENDING STRESS ON THE NET AREA OF THE CONNECTION ANGLE.

According to AISC, ASD, page 5-46, knowing:

for non-compacted section angles,

$F_b = 0.60 F_y$ where $F_y = 36$ ksi for A36

$F_b = 0.60 \times 36 = 21.6$ ksi

According to ANSI/ASME B30.20-1985 Below the Hook Lifting Devices

$F_b = \frac{1}{3} F_y$ where $F_y = 36$ ksi for A36

$F_b = \frac{1}{3} \times 36 = 12$ ksi —— governs

- FIND THE COMPUTED BENDING STRESS ON THE NET AREA OF THE CONNECTION ANGLE.

For single angle,

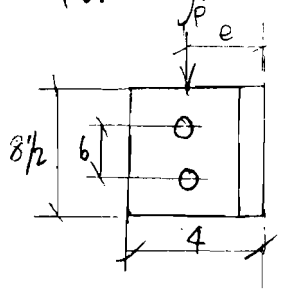

$M = P \times e$

where $P = 622.12$ lb

$e = 2.5$ in

$M = 622.12 \times 2.5 = 1.555$ kips-in

$S_{net} = 3.1259 \text{ in}^3$

$f_b = \frac{M}{S_{net}} = \frac{1.555}{3.1259} = 0.497$ ksi

- FIND THE SAFETY FACTOR ON BENDING STRESS ON THE NET AREA OF THE CONNECTION ANGLE

$f_b = 0.497$ ksi

$F_b = 12$ ksi

$SF = \frac{F_b}{f_b} = \frac{12}{0.497} = 24$

— CHECK THE DEFLECTION ON SIDE WALL OF 12×4 TUB/MGH

From previous study, knowing : $P = 1895.02\,lb$

According to AISC, ASD, Beam Diagrams, page 2-298, knowing, the maximum deflection at center is

$$\Delta_{max} = \frac{Pa}{24EI}(3l^2 - 4a^2)$$

where $p = 1895.02\ lb$

$a = 3\ in$

$E = 29 \times 10^6$

$I = \frac{bh^3}{12} = \frac{4 \times (0.3125)^3}{12} = 0.010\ in^4$

$l = 12\ in$

$$\Delta_{max} = \frac{1895.02 \times 3}{24 \times 29 \times 10^6 \times 0.010}(3 \times 12^2 - 4 \times 3^2)$$

$$= 0.323\ in$$

— CHECK THE BENDING STRESS ON SIDE WALL OF 12×4 TUBING:

From previous study, knowing $P = 1895.02$ lb
According to AISC, ASD, Beam Diagrams, page 2-298,
knowing, the maximum moment between the loads is

$$M_{max} = Pa$$

where $P = 1895.02$ lb
$a = 3$ in

$$M_{max} = 1895.02 \times 3 = 5685.06 \text{ lb-in}$$

According to ANSI/ASME, B30.20-1993, Below the Hook Lifting Devices, knowing. the allowable bending stress is $\frac{1}{3}F_y$.

therefore. $F_b = \frac{1}{3}F_y$ $\quad F_y = 36$ ksi for A36

$$= \frac{1}{3} \times 36 = 12 \text{ ksi}$$

O FIND THE REQUIRED SECTION MODULUS S_X (in^3)

$$F_b = \frac{M}{S_X} \rightarrow S_X = \frac{M}{F_b}$$

Where $M = 5685.06$ lb-in
$F_b = 12000$ psi

$$S_X = \frac{5685.06}{12000} = 0.474 \text{ in}^3$$

Knowing: the tubing wall section modulus is

$$(S_x)_{wall} = \frac{bh^2}{6}$$

where $b = 4$ in

$h = 0.3125$ in

$$(S_x)_{wall} = \frac{4 \times 0.3125^2}{6} = 0.065 \text{ in}^3$$

therefore,

$$\Delta S_x = S_x - (S_x)_{wall}$$

$$= 0.474 - 0.065 = 0.409 \text{ in}^3$$

o FIND THE PLATE THICKNESS DUE TO THE REQUIRED SECTION MODULUS ΔS_x.

Knowing: $\Delta S_x = 0.409 \text{ in}^3$

$$\Delta S_x = \frac{bh^2}{6}$$

where $b = 4$ in

$\Delta S_x = 0.409$

$$h = \sqrt{\frac{6 \times \Delta S_x}{b}} = \sqrt{\frac{6 \times 0.409}{4}} = 0.78 \text{ in}$$

use 7/8" plate

CHECK THE DEFLECTION AFTER ADDING THE PLATE.

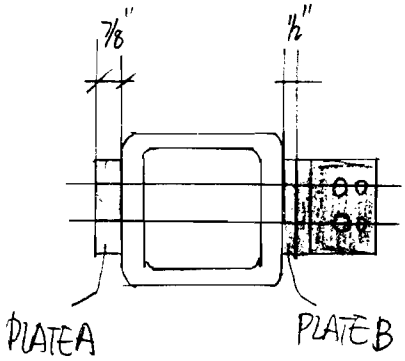

From previous study, knowing:

$$\Delta_{max} = \frac{pa}{24EI}(3l^2 - 4a^2)$$

where $p = 1895.02$ lb

$a = 3$ in

$E = 29 \times 10^6$

$I = \frac{bh^3}{12} = \frac{4 \times (0.3125^3 + 0.875^3)}{12} = 0.233 \text{ in}^4$

$l = 12$ in

$$\Delta_{max} = \frac{1895.02 \times 3}{24 \times 29 \times 10^6 \times 0.233} \times (3 \times 12^2 - 4 \times 3^2)$$

$$= 0.014 \text{ in}$$

The allowable deflection is

$$\frac{l}{480} = \frac{12}{480} = 0.025 \text{ in}$$

$$SF = \frac{0.025}{0.014} = 1.8$$

The sketch shown above is adequate.

FIND THE DESIRED CLAMPING FORCE / TORQUE

According to suggested assembly torque value for Bolt 3/4" A325 to produce corresponding Bolt load, knowing the clamping load is 21300 lb.

Therefore, the required the torque needs to be investigated.

From previous study, knowing.

$$\Delta_{max} = \frac{Pa}{24EI}(3l^2 - 4a^2)$$

then $$P = \frac{\Delta_{max} \cdot 24EI}{a(3l^2 - 4a^2)}$$

where $\Delta_{max} = \frac{l}{180} = \frac{12}{180} = 0.067$ in

$E = 29 \times 10^6$

$I = \frac{bh^3}{12} = \frac{4 \times (0.312^3 + 0.875^3)}{12} = 0.23 \text{ in}^4$

$l = 12$ in

$a = 3$ in

$$P = \frac{0.067 \times 24 \times 29 \times 10^6 \times 0.23}{3 \times (3 \times 12^2 - 4 \times 3^2)}$$

$= 8983$ lb.

According to "Design of Machine Elements" chapter 5. page 276.
knowing, Torque required to produce desired clamping force is

$T = 0.195\, dw$ for unplated & uncoated A325 Bolt

where d = nominal diameter of the Bolt
$= 0.75$ in

W = clamping force $= 8983$ lb

therefore, $T = 0.195\, dw$
$= 0.195 \times 0.75 \times 8983$
$= 1314$ lb-in

In conclusion, the desired torque applied on the connections mentioned above is 1314 lb-in.

— DESIGN PLATE A:

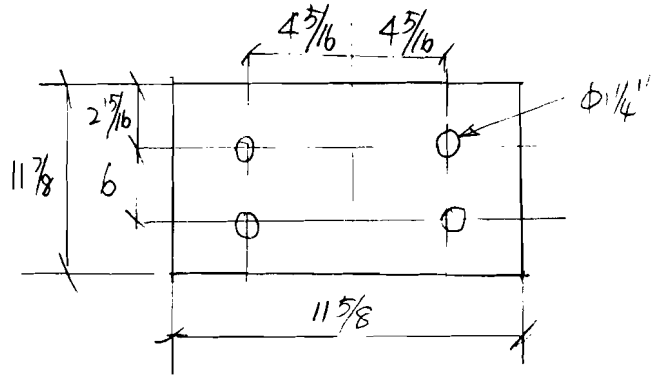

Plate : 7/8" × 11 7/8" × 11 5/8 × 2 (each)

— DESIGN PLATE B :

Same as plate 1 in section B page 24

1/2" × 4" × 10" × 4 (each)

DESIGN THE WELDS FOR MOMENT M_y

This section will be the same as the section B page 22. since M_y is identical.

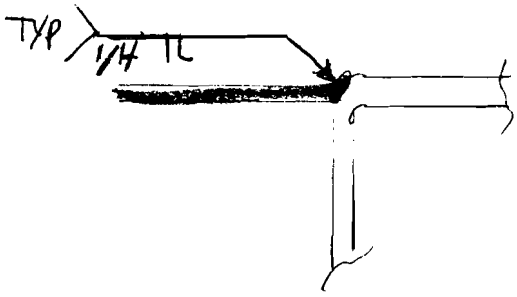

② CHECK THE ASSEMBLING CLEARANCES

[redacted] member :

* Bolt : 3/4-10-UNC-2A type 1 (medium carbon steel)
  HEX HEIGHT 1/2"

* Nut : A194 grade 2 for Bolt 3/4" dia (hardened)
  Nut Height 3/4"

* Washer : F436 hardened flat washer for Bolt 3/4" dia
  washer Height 5/32"

Bolt length = the total thickness of all connected material + Grip + washer

$= (3.615 + 2 \times 0.375) + (1) + (5/32)$

$= 5.52$ in $\rightarrow$ 5 1/2" Long

Bolt : 3/4-10 UNC 2A x 5 1/2" Long x (4) each

[redacted] connected with tubing

Bolt length = the total thickness of all connected material + Grip + washer

$= (0.875 + 4 + 0.375) + (\frac{1}{2}) + (1) + (3/32)$

$= 6.9''$

$\hookrightarrow$ USE 7" LONG BOLT

Bolt : 3/4 - 10 - UNC - 2A x 7" long x 4 (each)

– CHECK THE CLEARANCE FOR ASSEMBLING

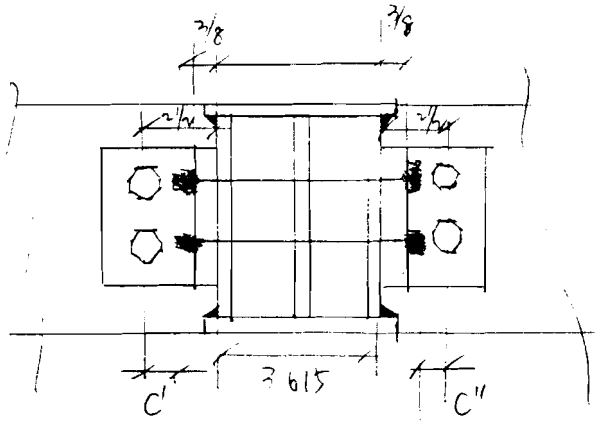

According to AISC, ASD, page 4-137 for A325 high strength bolt.

C_1 tightening clearance = 1 1/4" in

C_2 entering clearance = 3/4" in

$C' = \text{Angle gage} - (\text{Bolt length} - 3/8 - 3.615)$

$= 2\tfrac{1}{2} - (5.5 - 3/8 - 3.615)$

$= 0.99 > C_2$ use open end wrench

$C'' = \text{Angle gage} - (\text{Angle thickness} + \text{Hex height})$

$= 2\tfrac{1}{2} - (3/8 + 1/2)$

$= 1.625 > C_1$ use SOCKET WRENCH

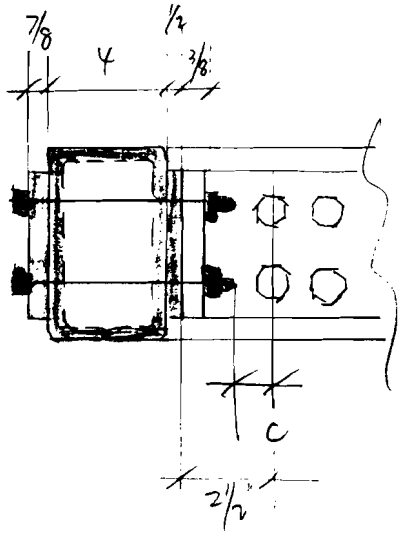

According to AISC, ASD, page 4-137
for A325 high strength bolt

C_1 tightening clearance = 1 1/4 in

C_2 entering clearance = 3/4 in

$$c = 2\tfrac{1}{2} - (7 - \tfrac{7}{8} - 4 - \tfrac{1}{2})$$

$$= 0.875'' > C_2 \quad \text{use open end wrench.}$$

In conclusion, the connection as sketched is adequate.