Lifting Fixture

I.D. Nº 39

COLOR OF BAR: Yellow

LOAD CAPACITY PAINTED ON BAR 1000 lbs

DATE CAP. & I.D. Nº PAINTED ON BAR _____

DATE OF LAST LOAD TEST. 8/8/91

TEST LOAD WEIGHT 1250 lbs.

TEST LOAD % 125%

STRESS CALCULATIONS:

DONE BY Donald V. Mitchell

DATE May - August '91

REMARKS: Safety Review performed by: Arie Lipski; Safety Review Sub-Committee (8/91)

CDF
CMEX
UPGRADE

CHAMBER
LIFTING
APPARATUS

---

prepared by:
Donald V. Mitchell
x4710 / p547

CDF
CMEX
UPGRADE

CHAMBER
LIFTING
APPARATUS

OVERVIEW

Situation

In order to mount muon chambers to a conical shaped, 35' tall frame, located at CDF, it was necessary to design a lifting apparatus that allowed maximum flexibility to make chamber attachment easy and safe.

Design Requirements

The lifting apparatus must be able to:

* support an 827# chamber/scintillator assembly

* maintain at least a safety factor of 3 on allowable stress

* be flexible to allow for attaching chambers at complex angles by using multi-axis rotations

Design Overview: (refer to detailed drawings and photographs)

Three sub-assemblies were combined to create this lifting apparatus; an "H" frame, "I" frame, and a "T" frame. The "T" frame serves as the base frame on which the chamber is mounted. Two ball joints serve as the pivot point for the chamber which allows for the first axis of rotation needed to properly position the chamber.

The "I" and "H" frame sub-assemblies are bolted onto the "T" frame for the sole purpose of raising the chain-hoist pick points above the center of gravity of the chamber. This was done to maintain stability through all possible mounting configurations.

For mounting lower chambers onto the conical frame, the lifting apparatus is turned upside-down and the "I" and ""H" frame sub-assemblies are left off. These sub-assemblies are no longer needed because in the inverted configuration, the chamber center of gravity is always below the chain-hoist pick points.

By utilizing three chain hoists, each attached to its own pick point, a multitude of mounting configurations can be attained.

Analysis:

To analyze a lifting frame that has a large range of motion, it was necessary to look at multiple configurations to isolate the worst case. Once the worst case could be identified, then material

selection and element design could be performed. To accomplish this, four mounting configurations were reviewed; 1) horizontal frame, 2) 45° rotation on one axis, 3) 45° rotation on the other axis, 4) 45° rotation on both axis.

Nodal points and elements were created to simulate the actual lifting apparatus. Restraints and loads were added and then a computer simulation was run on IDEAS "Frame Analysis". The results are summarized on the next page. The worst case was when the lifting apparatus is rotated 45° on two axes. This configuration puts the most twist onto the frame; particularly on the "H" frame sub-assembly.

<u>NOTE</u>: Maximum stress on the computer simulation was 7430 psi. With a factor of safety of 3, the allowable stress is 7200 psi which would indicate that the design is not adequate. However, it should be pointed out that the actual maximum rotations of the lifting fixture will be 41 .6° rotation on one axis, and 27° rotation on the other axis. Also, steel plate gussets were not simulated in the model. With these two considerations in mind, the lifting apparatus would easily be below the safety factor of 3 which is required for all lifting fixtures.

Hand calculations were performed using ultra-conservative worst cases. It was shown that structurally this lifting apparatus is adequate for the purposes for which it has been designed.

<u>Load Test:</u>

A load test was performed using a 1250# concrete block to simulate the chamber (refer to photographs).* The apparatus was lifted easily and was rotated into many positions. Deflections and stress problems were not observed.

*125% of the actual load must be used for a load test. Therefore, this apparatus can have a load capacity of 1000#.

This lifting apparatus will be clearly marked with "ID#39" and "Load Capacity 1000#".

Engineered and designed by Donald Mitchell, RD/Mechanical Department - x4960.

Signature: Donald V. Mitchell

Approved by Arie Lipski, Engineer, Safety Review Subcommittee - x4960.

Signature: Date:

CDF
CMEX
UPGRADE

CHAMBER
LIFTING
APPARATUS

SUMMARY

Summary	CDF CMEX UPGRADE Lifting Fixture Analysis	Don Mitchell 2-26-91	X4710 P.547	ID# 39

At Rest, Level, No Rotations on frame

	Joint	Element	Value
Displacements:			
X	15		-.070 in
y	10		-.1061 in
Z	15		-.478 in
Maximum Stress:		12	3994 psi

45° Rotation about X-Axis:

Displacements:			
X	13		.05983 in
y	12		-.09716 in
Z	10		.08341 in
Maximum Stress:		4	4137 psi

45° Rotation about Z-Axis:

Displacements:			
X	15		1.439 in
y	11		-.4357 in
Z	6		-.5569 in
Maximum Stress:		15	6467 psi

45° Rotation about Z-Axis: 45° Rotation about X-Axis:

Displacements:			
X	13		-.5626 in
y	6		-.3903 in
Z	13		.2202 in
Maximum Stress:		3	7430 psi

CDF
CMEX
UPGRADE

CHAMBER
LIFTING
APPARATUS

HAND
CALCULATIONS

$F_a = .6\,F_y = 21{,}600\,psi \equiv$ Allowable Stress for A36 Steel

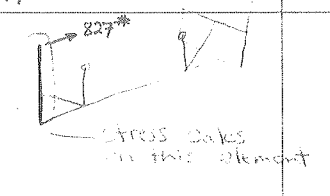

Bending Stress on Vertical tube.

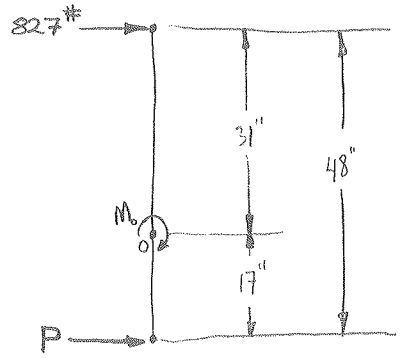

$M_o = (827^{\#})(31") = 25{,}637$ in-lb

$P = M_o/17" = 1508.05^{\#}$

TS 3x3x1/4

$S = 2.10\ in^3$

$\sigma_o = \frac{M_o}{S} = \frac{25{,}637\ in\text{-}lb}{2.10\ in^3} = 12{,}208\ psi$ OK

Allowable Stress for ASTM A500 Gr. B = 27,600 psi

Shear on Bolts due to force "P"

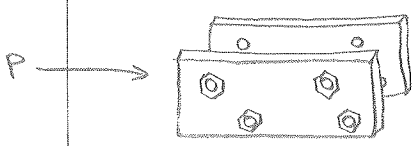

8 Bolts 1/2-13 Grade 5 w/washers

$\sigma_{shear} = \frac{P}{Area} = \frac{1508.05^{\#}}{8(\pi(.25)^2)} = \frac{1508.05^{\#}}{1.5708\ in^2} = 960.06\ psi$ OK

Look at ultra conservative worst case

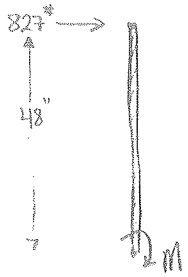

$M = (827^{\#})(48") = 39696$ in-lb

$\sigma = \frac{M}{S} = \frac{39696}{2.10} = 18{,}903.2\ psi$ OK

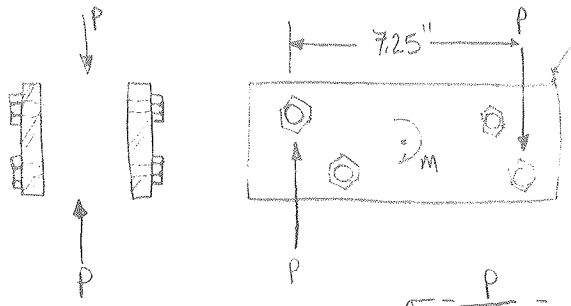

$\frac{M}{d} = P \quad \frac{39696\ in\text{-}lb}{7.25"} = 5475.31^{\#}$

$\sigma_{shear} = \frac{P}{Area} = \frac{5475.31}{4(.142)} = 9{,}639.6\ psi$ OK

$\sigma_{Shear\ Allowable} = .17\,F_u$ where $F_u = 92000\ psi$ for Grade 5 bolts

$= 15{,}640\ psi \equiv$ allowable shear on Bolts.

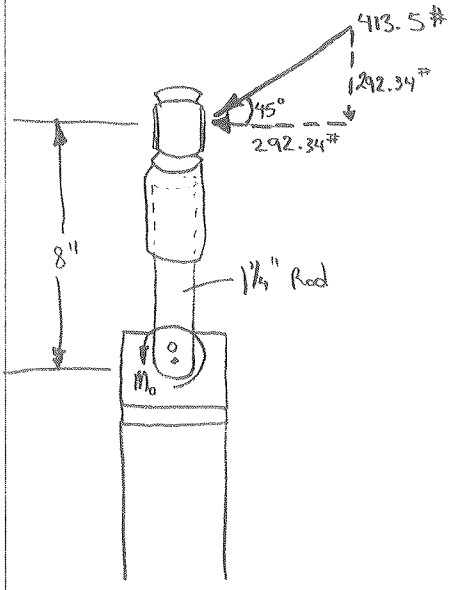

$M_o = (8")(292.3\#) = 2338.7$ in-lb

$I = \frac{\pi R^4}{4} = \frac{\pi(.625)^4}{4} = .1198422$

$c = .625$

$\sigma_{max} = \frac{Mc}{I} = \frac{(2338.7\#)(.625)}{.1198422} = 12{,}197.05$ psi OK

Compression Load on tube sections

84" is maximum length of 3x3x¼" tube ∴ L = 84"

K = 2.10 r = 1.10"

$\frac{KL}{r} = \frac{(2.10)(84")}{1.10} = 160.36$

A500 Gr. B steel tube, F_y = 46,000 psi

$\frac{KL}{r} = 160.36$

	36 KSI	50 KSI	(interpolated) 46 KSI
F_a =	5.83	5.83	5.83

F_a = 5830 psi

Beam #18 has stress of 38[illegible] psi

OK

For Maximum Stress Element #3 (31" length): Calculate Allowable σ_{max}

K = .65 L = 31" r = 1.10 $\frac{KL}{r} = \frac{(.65)(31")}{1.10} = [illegible]$

F_a (36) = [illegible] KSI F_a (50) = 28.51 KSI

Max stress on Beam #3 = 7430 psi OK

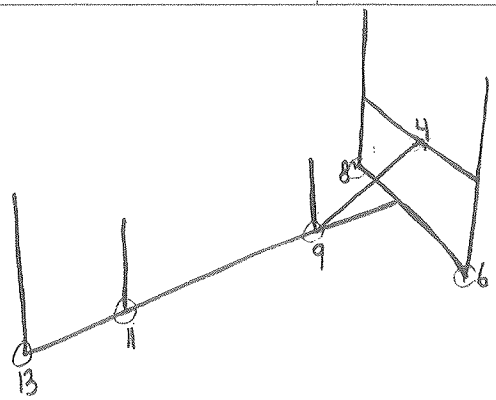

Nodal Pt. #
8
6
9
11
13
4

Nodal Pt. #	F_x	F_y	F_z	M_x	M_y	M_z
6	137.9	139.6	160.8	3835	2731	894.8
8	50.07	206.9	133.9	610.1	334.3	560.8
9 & 11	212.5	347.0	122.7	300.0	3435	10240
4	992.4	449	69.59	3353	6926	5305
13	404.7	248.8	296.9	527.8	2877	103.9

Nodal Forces & Moments have been extracted from frame analysis.

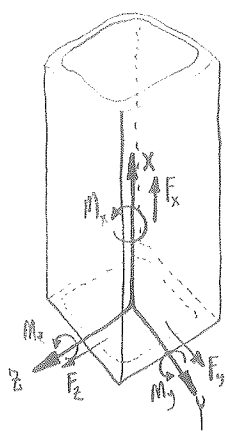

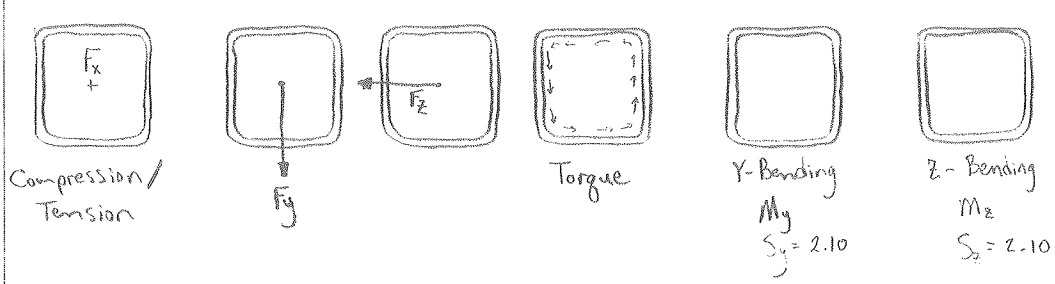

$$f_{torque} = \frac{T y}{(b+d)^3/6} = \frac{T}{3} = f_{y'} = f_{z'}$$

$$f_x = \frac{F_x}{12} \qquad f_y = \frac{F_y}{6} \qquad f_z = \frac{F_z}{6}$$

$$f_x' = \frac{M_y}{S_y} = \frac{M_y}{12} \qquad f_x'' = \frac{M_z}{S_z} = \frac{M_z}{12}$$

$$f_{total} = \sqrt{(f_x + f_x' + f_x'')^2 + (f_y + f_y')^2 + (f_z + f_z')^2}$$

Nodal Pt. #	f_x	f_x'	f_x''	f_y	f_y'	f_z	f_z'	f_{total}	
6	11.49	227.58	74.57	23.27	1278.3	26.8	1278.3	1869.69	lb/in
8	4.17	27.86	46.73	34.48	203.37	22.32	203.37	337.21	lb/in
9 & 11	17.71	286.25	883.31	57.83	100	20.45	100	1174.17	lb/in
4	82.7	577.17	442.08	74.8	1117.7	11.60	1117.7	1977.79	lb/in **
13	33.7	239.75	8.66	41.47	175.9	49.48	175.9	421.46	lb/in

Maximum strength needed is 1.978 Kip/in

USE minimum 3/16" weld.

Reference: Steel Structures: Design and Behavior 3rd Edition
Charles G. Salmon / John E Johnson
Chapter 5: Welding

CDF
CMEX
UPGRADE

CHAMBER
LIFTING
APPARATUS

COMPUTER
SIMULATIONS

alysis 24-JUL-91 08:56:48

Units : IN

Display : none, none

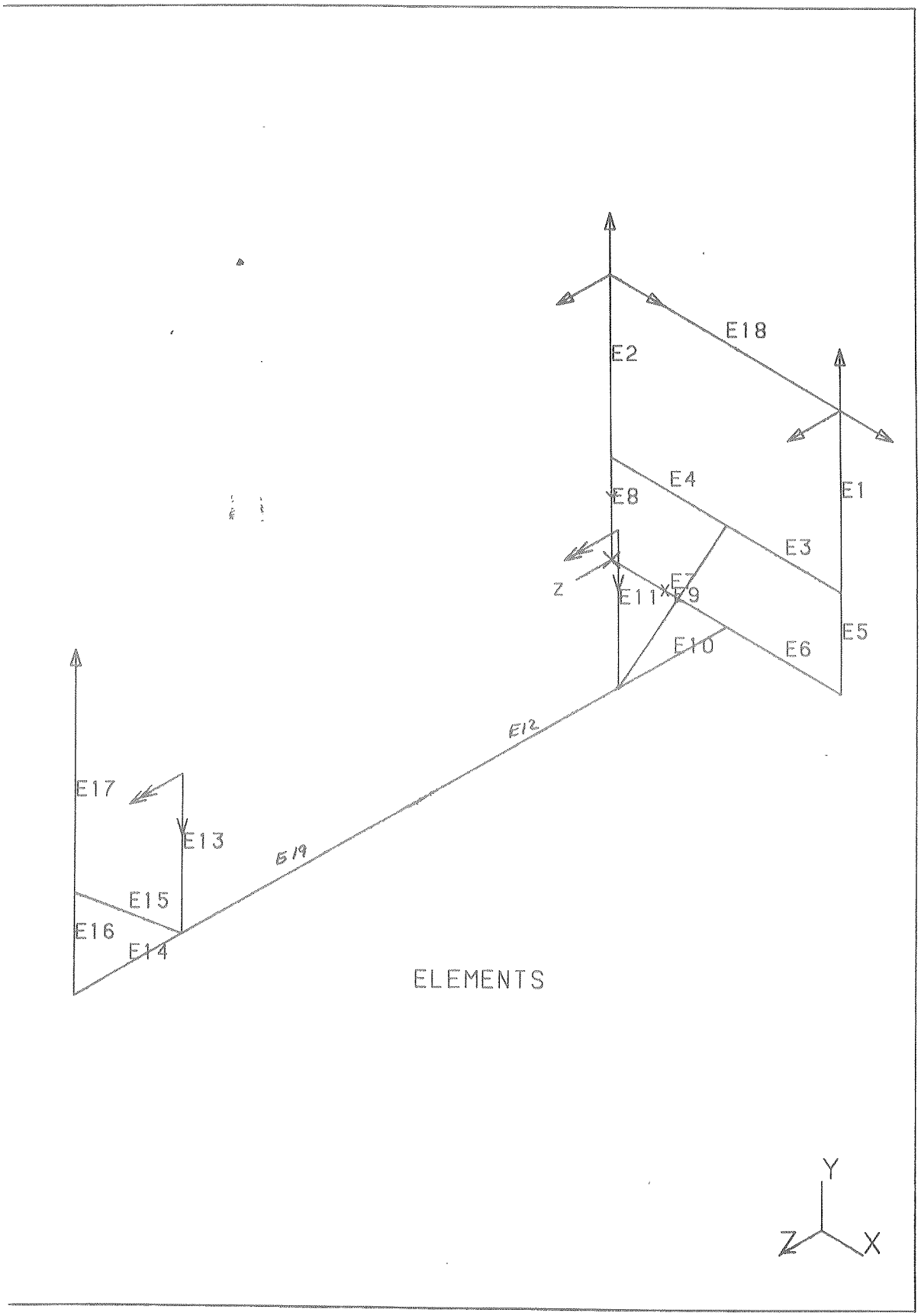

Database: FRAME
View : 2, 2
CMEX LIFTING FIXTURE
LOAD CASE 1 LEVEL AT REST NO TURN

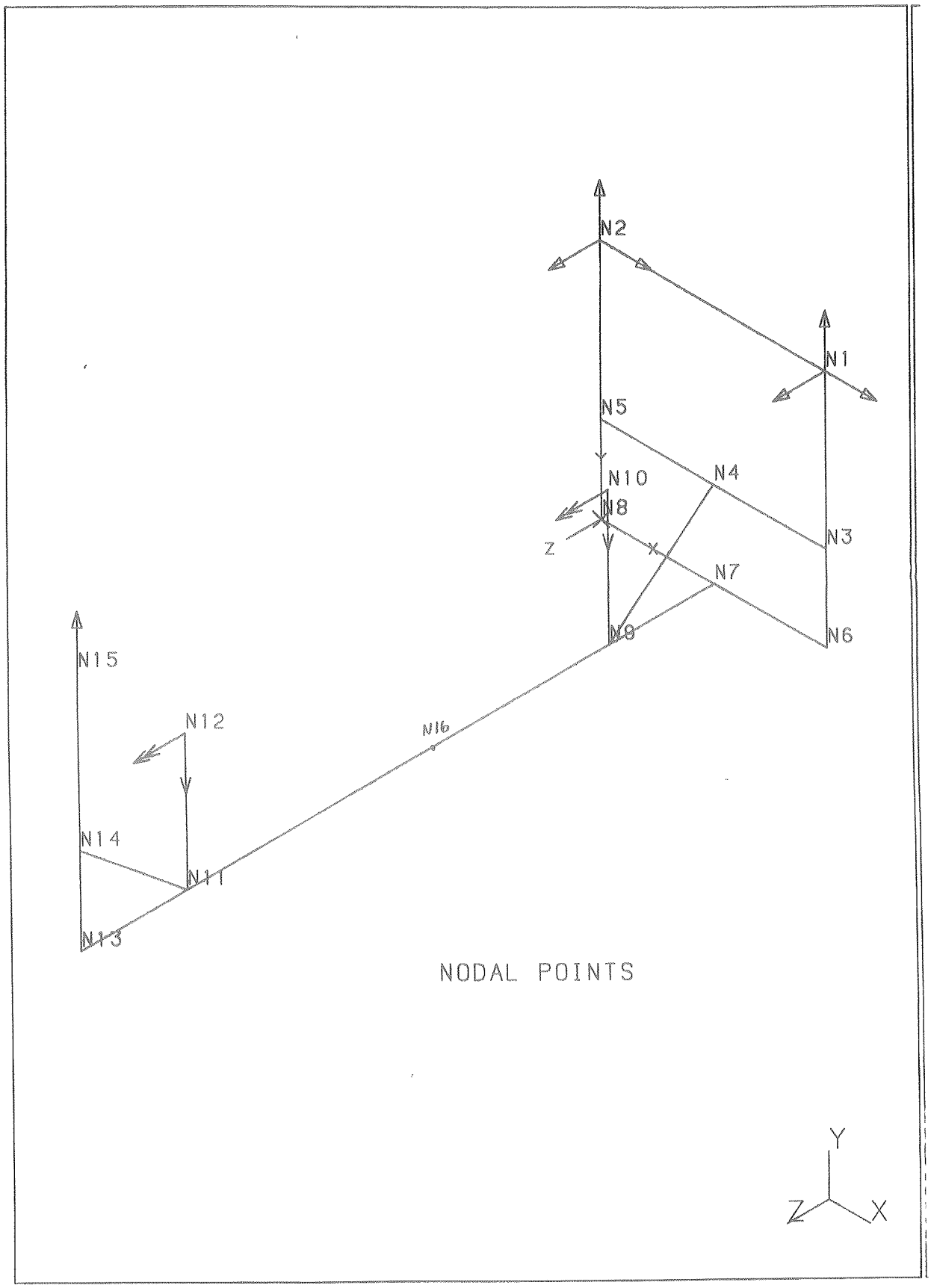

CDF
CMEX
UPGRADE

CHAMBER
LIFTING
APPARATUS

COMPUTER
SIMULATIONS

Frame Rotated
45° about X-axis
45° about Z-axis

F R A M E

STATIC ANALYSIS

STRUCTURAL DYNAMICS RESEARCH CORPORATION

CMEX LIFTING FIXTURE

*** SPACE FRAME ANALYSIS ***

STRAIGHT BEAMS

BEAM	LENGTH	FORE END JOINT	AFT END JOINT	MATERIAL CODE	SECTION CODE	ROTATION ANGLE	TEMP.
1	32.01	1	3	1	1		
2	32.00	2	5	1	1		
3	23.50	3	4	1	1		
4	23.50	4	5	1	1		
5	18.00	3	6	1	1		
6	23.50	6	7	1	1		
7	23.50	7	8	1	1		
8	18.00	5	8	1	1		
9	28.43	4	9	1	1		
10	22.00	7	9	1	1		
11	28.00	10	9	1	1		
12	44.00	9	16	1	1		
13	28.00	12	11	1	1		
14	22.00	11	13	1	1		
15	28.43	14	11	1	1		
16	18.00	14	13	1	1		
17	32.00	15	14	1	1		
18	46.99	1	2	1	1		
19	44.00	16	11	1	1		

JOINT COORDINATES

JOINT	X	Y	Z
1	-2.131	48.500	48.500
2	-35.355	25.000	25.000
3	20.506	32.500	32.500
4	3.889	20.750	20.750
5	-12.728	9.000	9.000
6	33.234	23.500	23.500
7	16.617	11.750	11.750
8	0.000	0.000	0.000
9	16.617	-3.806	27.306
10	-3.182	10.194	41.306
11	16.617	-66.032	89.532
12	-3.182	-52.032	103.532
13	16.617	-81.588	105.088
14	3.889	-72.588	114.088
15	-18.738	-56.588	130.088
16	16.617	-34.919	58.419

STATIC ANALYSIS
CMEX LIFTING FIXTURE

MATERIAL PROPERTIES

CODE	E	POISSON'S	DENSITY	THERMAL COEFFICIENT	YIELD
1	30.0E+06	0.290	2.840E-01	2.010E-06	4.600E+04

SPECIAL CROSS SECTIONS

CODE	TYPE	P1	P2	P3	P4	P5	P6
1	STEEL SECT. T3X3X4	AISC 8TH					

CROSS-SECTION PROPERTIES

CODE	AREA	MOMENTS OF INERTIA Z	MOMENTS OF INERTIA Y	SHEAR RATIO Y	SHEAR RATIO Z	TORSION CONSTANT	WARPING CONSTANT	DEG. FIX.
1	2.590E+00	3.160E+00	3.160E+00	2.08	2.08	5.440E+00		

STRESS RECOVERY VALUES

ODE	COMBINED STRESS	POINT 1/3 C(Y)	POINT 1/3 C(Z)	POINT 1/3 R(EFF)	POINT 2/4 C(Y)	POINT 2/4 C(Z)	POINT 2/4 R(EFF)
1	4	1.350	1.350	1.460			

TOTAL STRUCTURE WEIGHT/MASS = 3.942E+02 lbs without gussets

C.G. LOCATION: X = 5.741 Y = -10.594 Z = 49.475

SPECIFIED RESTRAINTS

JOINT	DIRECTION	VALUE
1	2	
2	1235	
15	2	

STATIC ANALYSIS
CMEX LIFTING FIXTURE

LOADING NO. 45: ROT"X" 45 ROT"Z"

JOINT	APPLIED FORCES DIR	TYPE	VALUE	FINAL JOINT	INC.
12	Y	FORCE	-4.250E+02		
10	Y	FORCE	-4.250E+02		
12	Z	MOMENT	6.000E+02		
10	Z	MOMENT	6.000E+02		

TOTAL APPLIED FORCES:
F(X) = 0.000E+00 F(Y) = -8.500E+02 F(Z) = 0.000E+00

MOMENTS ABOUT ORIGIN:
M(X) = 6.156E+04 M(Y) = 0.000E+00 M(Z) = 3.905E+03

```
=          90
           47
           16
         1438

           16
=          19
R =        16
BER =      19
AVERAGE = 7.802E+08 SMALLEST = 1.112E+03 ROW      87
```

STATIC ANALYSIS
CMEX LIFTING FIXTURE

T A B L E O F C O N T E N T S

PAGE

LOAD CASE NO. 45: ROT"X" 45 ROT"Z"

DISPLACEMENTS 1
REACTION FORCES 2
MEMBER FORCES 2
BEAM STRESSES 3
STRAIN ENERGY 5

OUTPUT BY JOINT AND ELEMENT

JOINT CODE CHECK 6

STATIC ANALYSIS
CMEX LIFTING FIXTURE

UNITS USED FOR RESULTS:

UNITS FOR DISPLACEMENT ARE: IN

UNITS FOR FORCE ARE: LB

UNITS FOR STRESS ARE: PSI

LOAD	DESCRIPTION
45	ROT"X" 45 ROT"Z"

F R A M E

STATIC ANALYSIS

STRUCTURAL DYNAMICS RESEARCH CORPORATION

CMEX LIFTING FIXTURE

UNITS USED FOR RESULTS:

UNITS FOR DISPLACEMENT ARE: IN

UNITS FOR FORCE ARE: LB

UNITS FOR STRESS ARE: PSI

UNITS FOR STRAIN ENERGY ARE: LB -IN

*** LOADING NO. 45: ROT"X" 45 ROT"Z"

JOINT DISPLACEMENTS

JOINT	X	Y	Z	THETA(X)	THETA(Y)	THETA(Z)
1	1.188E-01	0.000E+00	-1.677E-01	-8.299E-03	-6.430E-04	-6.021E-03
2	0.000E+00	0.000E+00	0.000E+00	-6.802E-03	0.000E+00	-5.262E-03
3	3.125E-02	-2.639E-01	-2.785E-02	-6.935E-03	-4.598E-04	-5.502E-03
4	-2.495E-02	-2.526E-01	4.016E-02	-5.206E-03	-3.090E-04	-5.418E-03
5	-8.752E-02	-2.195E-01	9.567E-02	-5.116E-03	-1.021E-04	-5.466E-03
6	-1.485E-02	-3.903E-01	3.337E-02	-5.538E-03	-4.770E-04	-5.694E-03
7	-7.581E-02	-3.562E-01	8.554E-02	-4.579E-03	-2.708E-04	-5.216E-03
8	-1.336E-01	-3.300E-01	1.410E-01	-4.956E-03	-1.188E-05	-4.980E-03
9	-1.617E-01	-2.957E-01	1.459E-01	-2.983E-03	-7.296E-04	-4.755E-03
10	-1.185E-01	-1.868E-01	9.807E-02	-2.135E-03	-7.075E-04	-3.313E-03
11	-4.813E-01	-2.381E-01	2.037E-01	-7.322E-04	-9.038E-04	-3.882E-03
12	-4.526E-01	-1.780E-01	1.839E-01	1.153E-04	-8.817E-04	-2.440E-03
13	-5.626E-01	-2.217E-01	2.202E-01	-1.117E-03	-7.028E-04	-4.542E-03
14	-5.258E-01	-1.525E-01	2.032E-01	-1.383E-03	-4.673E-04	-4.852E-03
15	-4.460E-01	0.000E+00	1.637E-01	-2.014E-03	-4.673E-04	-5.744E-03
16	-3.269E-01	-2.494E-01	1.923E-01	-4.761E-04	-8.167E-04	-4.318E-03

MAXIMUM DISPLACEMENTS

JOINT	13	6	13	1	11	1
VALUE	-5.626E-01	-3.903E-01	2.202E-01	-8.299E-03	-9.038E-04	-6.021E-03

STATIC ANALYSIS
CMEX LIFTING FIXTURE
LOADING 45 - ROT"X" 45 ROT"Z"

JOINT REACTIONS

JOINT	F(X)	F(Y)	F(Z)	M(X)	M(Y)	M(Z)
1	0.000E+00	6.701E+02	0.000E+00	0.000E+00	0.000E+00	0.000E+00
2	7.557E-11	-5.381E+01	-5.042E-11	0.000E+00	3.870E-04	0.000E+00
15	0.000E+00	2.337E+02	0.000E+00	0.000E+00	0.000E+00	0.000E+00
TOTAL	7.557E-11	8.500E+02	-5.042E-11	0.000E+00	3.870E-04	0.000E+00

FORCES AND MOMENTS IN BEAMS

BEAM	JT.	FORCES X	FORCES Y	FORCES Z	MOMENTS X	MOMENTS Y	MOMENTS Z
1	1	2.405E+02	-3.836E+02	2.082E+02	1.213E+03	-5.564E+02	-3.315E+03
	3	2.405E+02	-3.836E+02	2.082E+02	1.213E+03	6.107E+03	8.964E+03
2	2	6.762E+01	-1.197E+02	-3.033E+01	2.658E+03	3.121E+03	-3.108E+02
	5	6.762E+01	-1.197E+02	-3.033E+01	2.658E+03	2.150E+03	3.518E+03
3	3	2.140E+02	6.571E+02	2.740E+02	-3.606E+03	3.094E+02	4.993E+03
	4	2.140E+02	6.571E+02	2.740E+02	-3.606E+03	6.749E+03	-1.045E+04
4	4	-2.059E+02	-2.540E+02	-1.550E+02	-3.852E+02	1.349E+03	-3.543E+03
	5	-2.059E+02	-2.540E+02	-1.550E+02	-3.852E+02	-2.292E+03	2.427E+03
5	3	-1.378E+02	1.394E+02	-1.606E+02	3.840E+03	5.620E+03	3.407E+03
	6	-1.378E+02	1.394E+02	-1.606E+02	3.840E+03	2.729E+03	8.980E+02
6	6	-2.106E+01	-2.347E+02	-9.324E+01	-2.746E+03	2.649E+03	-2.905E+03
	7	-2.106E+01	-2.347E+02	-9.324E+01	-2.746E+03	4.581E+02	2.610E+03
7	7	9.066E+01	1.732E+02	1.578E+02	5.264E+01	-3.586E+03	3.179E+03
	8	9.066E+01	1.732E+02	1.578E+02	5.264E+01	1.225E+02	-8.920E+02
8	5	-5.035E+01	2.062E+02	-1.345E+02	-6.151E+02	2.085E+03	4.278E+03
	8	-5.035E+01	2.062E+02	-1.345E+02	-6.151E+02	-3.367E+02	5.673E+02
9	4	9.925E+02	-4.480E+02	-6.924E+01	3.365E+03	6.923E+03	-5.290E+03
	9	9.925E+02	-4.480E+02	-6.924E+01	3.365E+03	4.955E+03	7.444E+03
10	7	-4.405E+02	-5.403E+01	2.120E+02	1.870E+03	4.546E+03	-5.877E+02
	9	-4.405E+02	-5.403E+01	2.120E+02	1.870E+03	9.211E+03	6.009E+02
11	10	-2.125E+02	3.470E+02	-1.227E+02	3.000E+02	-3.638E-12	-5.196E+02
	9	-2.125E+02	3.470E+02	-1.227E+02	3.000E+02	-3.435E+03	-1.024E+04

STATIC ANALYSIS
CMEX LIFTING FIXTURE
LOADING 45 - ROT"X" 45 ROT"Z"

BEAM	JT.	FORCES X	FORCES Y	FORCES Z	MOMENTS X	MOMENTS Y	MOMENTS Z
12	9	1.353E+02	-7.907E-11	-1.353E+02	5.319E+02	8.376E+03	5.319E+02
	16	1.353E+02	-7.907E-11	-1.353E+02	5.319E+02	2.424E+03	5.319E+02
13	12	-2.125E+02	3.470E+02	-1.227E+02	3.000E+02	-4.093E-12	-5.196E+02
	11	-2.125E+02	3.470E+02	-1.227E+02	3.000E+02	-3.435E+03	-1.024E+04
14	11	3.863E+02	-3.084E+02	2.642E+02	-1.750E+03	-4.565E+03	-4.789E+03
	13	3.863E+02	-3.084E+02	2.642E+02	-1.750E+03	1.247E+03	1.995E+03
15	14	-6.092E+02	-1.433E+02	-1.318E+02	-1.439E+03	-4.147E+02	6.824E+02
	11	-6.092E+02	-1.433E+02	-1.318E+02	-1.439E+03	-4.161E+03	4.755E+03
16	14	4.048E+02	2.485E+02	-2.973E+02	5.291E+02	2.470E+03	4.579E+03
	13	4.048E+02	2.485E+02	-2.973E+02	5.291E+02	-2.881E+03	1.053E+02
17	15	1.168E+02	-1.908E+02	6.746E+01	2.785E-12	1.819E-12	0.000E+00
	14	1.168E+02	-1.908E+02	6.746E+01	2.785E-12	2.159E+03	6.106E+03
18	1	1.421E+02	1.247E+02	1.270E+01	-2.368E+03	3.867E+02	2.648E+03
	2	1.421E+02	1.247E+02	1.270E+01	-2.368E+03	9.837E+02	-3.213E+03
19	16	1.353E+02	-7.987E-11	-1.353E+02	5.319E+02	2.424E+03	5.319E+02
	11	1.353E+02	-7.987E-11	-1.353E+02	5.319E+02	-3.528E+03	5.319E+02

STRESS CALCULATIONS

BEAM	END	MAX PT.	T SHEAR P/A	Y SHEAR Y BENDING	Z SHEAR Z BENDING	COMBINED	STRESS RATIO
1	AFT	1	-3.254E+02	-3.081E+02	1.672E+02		
			9.286E+01	2.609E+03	-3.829E+03	6.531E+03	0.14
2	AFT	1	-7.133E+02	-9.609E+01	-2.436E+01		
			2.611E+01	9.187E+02	-1.503E+03	2.448E+03	0.05
3	AFT	1	9.678E+02	5.277E+02	2.200E+02		
			8.263E+01	2.883E+03	4.464E+03	7.430E+03	0.16
4	FORE	1	1.034E+02	-2.040E+02	-1.244E+02		
			-7.949E+01	5.764E+02	1.514E+03	2.169E+03	0.05
5	FORE	1	-1.031E+03	1.119E+02	-1.290E+02		
			-5.320E+01	2.401E+03	-1.455E+03	3.910E+03	0.08
6	FORE	1	7.371E+02	-1.885E+02	-7.488E+01		
			-8.133E+00	1.132E+03	1.241E+03	2.381E+03	0.05

STATIC ANALYSIS
CMEX LIFTING FIXTURE
LOADING 45 - ROT"X" 45 ROT"Z"

BEAM	END	MAX PT.	T SHEAR P/A	Y SHEAR Y BENDING	Z SHEAR Z BENDING	COMBINED	STRESS RATIO
7	FORE	1	-1.413E+01	1.391E+02	1.267E+02		
			3.500E+01	-1.532E+03	-1.358E+03	2.925E+03	0.06
8	FORE	1	1.651E+02	1.656E+02	-1.080E+02		
			-1.944E+01	8.906E+02	-1.828E+03	2.738E+03	0.06
9	AFT	1	-9.031E+02	-3.598E+02	-5.560E+01		
			3.832E+02	2.117E+03	-3.180E+03	5.680E+03	0.12
10	AFT	1	-5.020E+02	-4.339E+01	1.703E+02		
			-1.701E+02	3.935E+03	-2.567E+02	4.362E+03	0.09
11	AFT	1	-8.051E+01	2.787E+02	-9.853E+01		
			-8.205E+01	-1.468E+03	4.373E+03	5.923E+03	0.13
12	FORE	1	-1.428E+02	-6.350E-11	-1.086E+02		
			5.223E+01	3.579E+03	-2.273E+02	3.858E+03	0.08
13	AFT	1	-8.051E+01	2.787E+02	-9.853E+01		
			-8.205E+01	-1.468E+03	4.373E+03	5.923E+03	0.13
14	FORE	1	4.695E+02	-2.477E+02	2.121E+02		
			1.491E+02	-1.950E+03	2.046E+03	4.146E+03	0.09
15	AFT	1	3.863E+02	-1.151E+02	-1.058E+02		
			-2.352E+02	-1.777E+03	-2.031E+03	4.044E+03	0.09
16	FORE	1	-1.420E+02	1.998E+02	-2.388E+02		
			1.563E+02	1.055E+03	-1.956E+03	3.168E+03	0.07
17	AFT	1	-7.475E-13	-1.532E+02	5.418E+01		
			4.511E+01	9.223E+02	-2.609E+03	3.578E+03	0.08
18	AFT	1	6.356E+02	1.002E+02	1.020E+01		
			5.488E+01	4.203E+02	1.373E+03	1.848E+03	0.04
19	AFT	1	-1.428E+02	-6.414E-11	-1.086E+02		
			5.223E+01	-1.507E+03	-2.273E+02	1.787E+03	0.04

MAXIMUM STRESS = 7.430E+03 ON BEAM 3

STATIC ANALYSIS
CMEX LIFTING FIXTURE
LOADING 45 - ROT"X" 45 ROT"Z"

	STRAIN ENERGY		COMPONENTS			
ELEM	TOTAL	PERCENT	BENDING & SHEAR	AXIAL	TORSION	RELEASES
1	5.99E+00	7.9	5.60E+00	1.19E-02	3.72E-01	
2	3.63E+00	4.8	1.84E+00	9.41E-04	1.79E+00	
3	8.19E+00	10.8	5.77E+00	6.93E-03	2.42E+00	
4	6.77E-01	0.9	6.43E-01	6.41E-03	2.76E-02	
5	4.34E+00	5.7	2.24E+00	2.20E-03	2.10E+00	
6	2.12E+00	2.8	7.17E-01	6.71E-05	1.40E+00	
7	8.93E-01	1.2	8.92E-01	1.24E-03	5.15E-04	
8	8.77E-01	1.2	8.23E-01	2.94E-04	5.38E-02	
9	1.05E+01	13.8	7.74E+00	1.80E-01	2.54E+00	
10	6.39E+00	8.4	5.75E+00	2.75E-02	6.08E-01	
11	6.17E+00	8.1	6.14E+00	8.14E-03	1.99E-02	
12	7.65E+00	10.1	7.55E+00	5.18E-03	9.84E-02	
13	6.17E+00	8.1	6.14E+00	8.14E-03	1.99E-02	
14	2.00E+00	2.6	1.44E+00	2.11E-02	5.32E-01	
15	2.85E+00	3.8	2.31E+00	6.79E-02	4.66E-01	
16	1.06E+00	1.4	1.00E+00	1.90E-02	3.98E-02	
17	2.41E+00	3.2	2.40E+00	2.81E-03	1.97E-30	
18	2.97E+00	3.9	8.78E-01	6.11E-03	2.08E+00	
19	9.53E-01	1.3	8.49E-01	5.18E-03	9.84E-02	

TOTAL STRAIN ENERGY = 7.579E+01

```
CMEX LIFTING FIXTURE
ANALYSIS
1,1
TOUTPUT
2,1,5
OUTPUT
1,2,3,4,6
7
UNITS
IN,LB
IN,LB,PSI
MTABLE
1,30E6,0,.29,.284,2.01E-06,46000
SPTABLE
1,STEEL,T3X3X4,2
JOINTS
1,-2.13132,48.5,48.5
2,-35.35534,25,25
3,20.5061,32.5,32.5
4,3.88909,20.75,20.75
5,-12.72792,9,9
6,33.23402,23.5,23.5
7,16.61701,11.75,11.75
8,0,0,0
9,16.61701,-3.80635,27.30635
10,-3.18198,10.19365,41.30635
11,16.61701,-66.03175,89.53175
12,-3.18198,-52.03175,103.53175
13,16.61701,-81.58809,105.0881
14,3.88909,-72.5881,114.08809
15,-18.73833,-56.58809,130.0881
16,16.61701,-34.91905,58.41905
REST
1,2,0
2,1235,0
15,2,0
BEAMS
1,1,3,1,1
2,2,5
3,3,4
4,4,5
5,3,6
6,6,7
7,7,8
8,5,8
9,4,9
10,7,9
11,10,9
12,9,16
13,12,11
14,11,13
15,14,11
16,14,13
17,15,14
18,1,2
19,16,11
LOAD 45 ROT"X" 45 ROT"Z"
FORCES
12,2,-425
10,2,-425
```

12,8,800
10,6,600

35000 LBS
ID 31