LIFTING FIXTURE FOR MUON DETECTOR
AT MUON LAB

I.D. Nº 38

COLOR OF BAR: Aluminum

LOAD CAPACITY PAINTED ON BAR 485 lbs

DATE CAP. & I.D. Nº PAINTED ON BAR _____

DATE OF LAST LOAD TEST. Feb. 2, 1991

TEST LOAD WEIGHT 485 lbs.

TEST LOAD % 139%

STRESS CALCULATIONS:

DONE BY Don Mitchell

DATE 1-28-91

REMARKS: Green Unistrut attachment plates (used for lifting attachment) do Not meet AISC minimum edge distance Code. This is a minor change and only requires a better steel plate to be fabricated. 2-14-91 DM

FERMILAB

RESEARCH DIVISION / MECHANICAL DEPARTMENT - MS#221
WILSON HALL 13TH FLOOR - PHONE: (708) 840-4710 FAX : 840-2950

JANUARY 29, 1990

TO: BRIAN LAVOY / Muon Lab Building Manager

FROM: DVM DONALD V. MITCHELL RD/MECH

SUBJECT: Review of Dick Davisson's detector mounts/lifting fixture

---

After performing a mechanical analysis of the fixture in question, it was determined that this fixture is structurally sound. In fact, all stresses were lower than 25% of the allowable stress. An analysis was performed on DE/CAASE and is included in this packet.

The steel "UNISTRUT" support plates used for connecting the fixture to the lifting crane do not meet "minimum edge distance" as per AISC code. (see attached code) The specific details are contained later in this packet. It is suggested that an adequate plate be designed, fabricated, and installed to conform with code regulations. Also, it is suggested, but not required, that washers be added to all bolted connections associated with this steel attachment plate to help prevent possible loosening of the nuts.

As per DOE guidelines, a load test must be performed on the fixture using 120% of the actual load. (1.2 x 160# = 192#min) A load capacity will be assigned to this fixture following this test. Photographs of this test will be taken for verification. Because this fixture is capable of handling a much larger load, it is advised that a larger load be tested so that a higher capacity can be assigned. This will allow for future additions to the apparatus without further needed reviews.

I.D. # 38 has been assigned to this lifting fixture. Following the assignment of the load capacity, the capacity and I.D. # will be painted on the fixture in a noticeable location.

I would like to be present for the load test. Please keep me informed.

CF:

Jim Kilmer	MS 221
Dick Davisson	Muon Lab
Spreader Bar Notebook	WH 13E

FERMILAB

RESEARCH DIVISION / MECHANICAL DEPARTMENT - MS#221
WILSON HALL 13TH FLOOR - PHONE: (708) 840-4710 FAX : 840-2950

FEBRUARY 14, 1991

TO: BRIAN LAVOY / Muon Lab Building Manager

DVM

FROM: DONALD V. MITCHELL RD/MECH

SUBJECT: Review of Dick Davisson's detector mounts/lifting fixture (part II)

After performing a mechanical analysis of the fixture in question, it was determined that this fixture is structurally sound. In fact, all stresses were lower than 25% of the allowable stress. An analysis was performed on DE/CAASE and was included in the previous analysis packet given to you in January.

The steel "UNISTRUT" support plates used for connecting the fixture to the lifting crane do not meet "minimum edge distance" as per AISC code. The specific details were contained in the previous packet. It was suggested that an adequate plate be redesigned, fabricated, and installed to conform with code regulations. This has not been done and even though it appears that the steel plate is structurally sound, it still does not meet AISC code as required by DOE safety regulations "General Design Criteria".

As per DOE guidelines, a load test was performed on the fixture using 139% of the actual load. (1.385 x 350# = 485#) This is acceptable since the required test of 120% of actual load was exceeded. A load capacity of 485# was assigned to this fixture following this test. Photographs of this test were taken for verification and copies are attached.

This fixture is assigned I.D. # 38 and a load capacity of 485#. The capacity and I.D. # will be painted on the fixture in a noticeable location once the lifting, steel, "UNISTRUT" plates have been redesigned and replaced.

For future information, "UNISTRUT" material is not an acceptable structural element for steel construction.

CF:

Jim Kilmer	MS 221
Dick Davisson	Muon Lab
Spreader Bar Notebook	WH 13E

University of Washington, FM 15
Department of Physics
Seattle Wa 98195

February 10, 1991

To Donald V Mitchell

From Dick Davisson

% Load test of Muon Detector

We subjected the muon detector assembly to a quick load test late in the evening the day before I flew back to Seattle. It was all rather improvised but we did manage to make a test and document it with photographs, some rather poor Polaroids and some less-bad 35mm prints which I enclose. I'm sorry you missed the fun!

The basic idea was to look on the muon detector as a lifting frame and a load, with the trusses considered part of the lifting frame and the drift chambers and the scintillators considered part of the load, with the rest left in limbo. That's fine for apportioning weight but the chambers are, in point of fact, a part of the structure. Weight, however, is what we were called on to consider. The total detector weight, as measured on the hoist scale, was 550 pounds. About 200 of that is in the trusses and braces, and about 250 in the drift chambers which leaves about a hundred in bits and pieces, which seems about right. If we consider that 100 to be a part of the load we can assign 200 to the "lifting frame" and 350 to the "load". Twenty percent of 350 pounds is 70 pounds, so the test should involve an additional 70 pounds. We used 85 pounds and 135 pounds, each of which is more than 70.

Our first problem was to find a way and a place to attach a load to a "lifting jig" which was not designed to be a lifting jig. We improvised by using two quarter-inch lines. In order to maximize the stresses on the structure we tied one line close to node 2 of one truss and the other close to node 6 on the other. For a load we used a spreader bar, specifically the one with ID # 28, hooked up in reverse, that is we lifted it by its ends. To get a bit more weight we hung a spool of wire from the spreader bar. All of this shows in the photos.

It remained to determine the weight of that which we had lifted. The scale on the hoist was much to coarse to be of use. There was no weight label on the spool of wire nor on its companion spools, but we found a platform scale in the gas shed. It looked rather ratty and I wouldn't swear to its accuracy, but it is what we had and the numbers it yielded seemed reasonable. For the spool it gave 50 pounds, for the spreader, about 85. That sums to 135 pounds, about double the 70 pound requirement.

The structure, of course, was indifferent to all of these proceedings.

Don mitchell x4710
1-7 91
RD/mech

MUON AB
Frame Nodal Layout

Properties

A: Area = 1.59 in²
I = 3.85 in⁴

B: Area = 1.21 in²
I = 1.66 in⁴

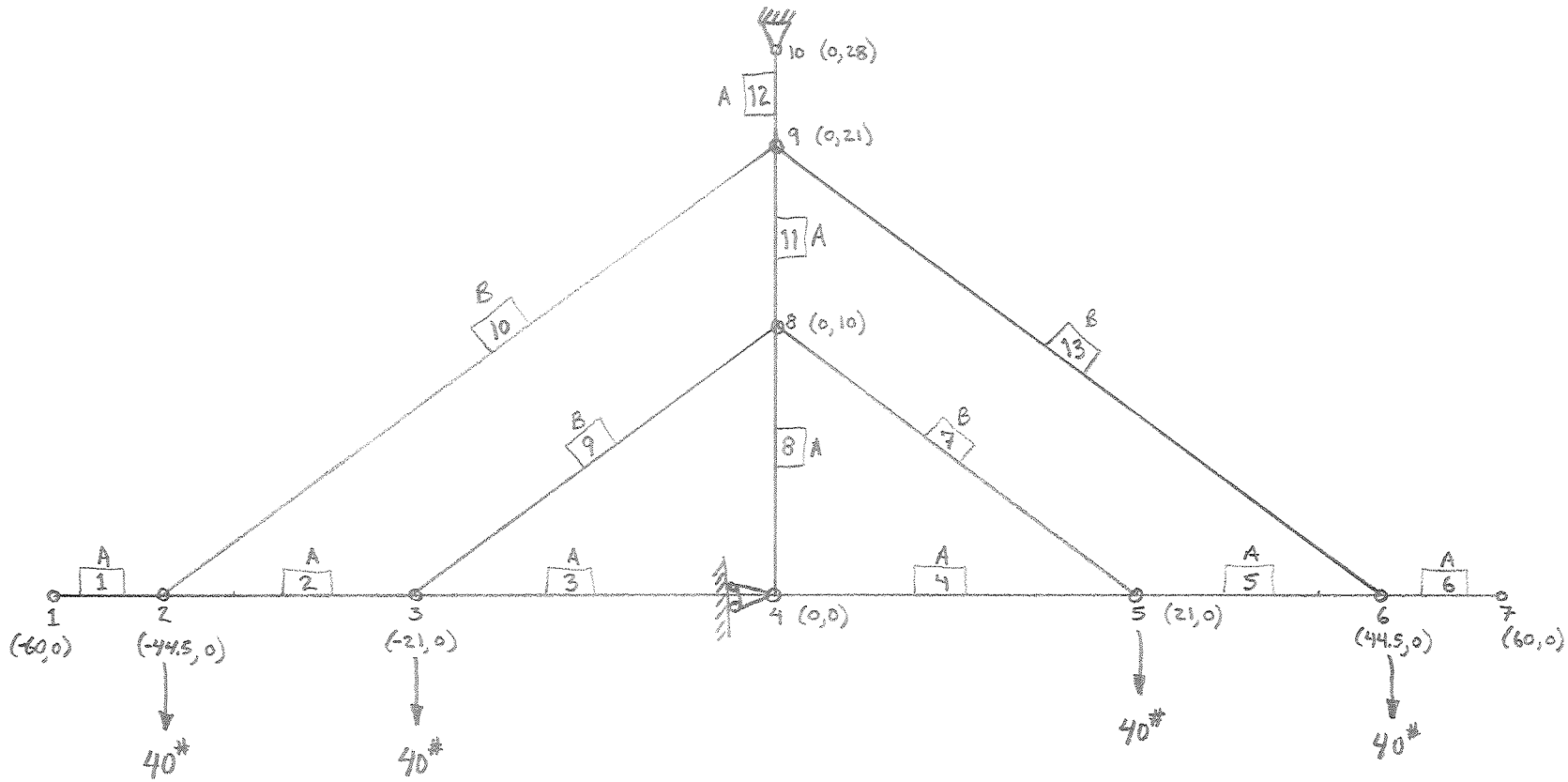

* Note: Entire load assumed to be on 1 (one) side of frame to be ultra-conservative. In reality, the 40# loads should be 20#.

```
** R E S U L T S **
Deflections:
 Xmax = 3.077398E-04 Joint = 1
 Ymax = 2.191208E-03 Joint = 1
Bending Moment:
 Mmax = 1.889809E+02
 Member = 4   Joint = 4
Shear Force:
 Vmax = 9.933921E+00
 Member = 3
Axial Force:
 Amax = 1.599999E+02
 Member = 12
Reactions:
 Rxmax = 6.949962E-05 Joint = 10
 Rymax = 1.599999E+02 Joint = 10
 Rmzmax = 9.465594E-12 Joint = 10
```

DEFLECTION

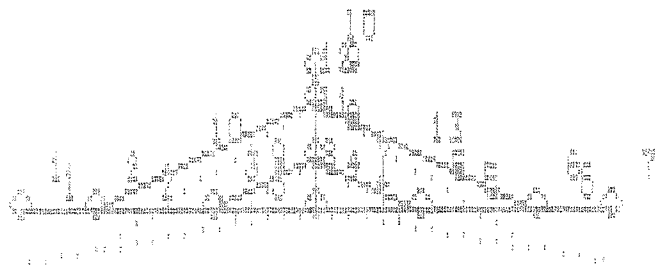

ENTER F6 FOR MOMENT DIAGRAM OR
F7 FOR LOAD SELECTION MENU

F2PRINT F3DISP F6NEXT F7MENU F8REDO F9SAVE F10TOP

Module C-5: General Two-Dimensional Frames

```
** R E S U L T S **
Deflections:
 Xmax  = 3.077398E-04 Joint = 1
 Ymax  =-2.191202E-03 Joint = 1
Bending Moment:
 Mmax  =-1.809809E+02
 Member= 4   Joint = 4
Shear Force:
 Vmax  = 9.933921E+00
 Member= 3
Axial Force:
 Amax  = 1.599999E+02
 Member=12
Reactions:
 Rxmax = 6.949907E-05 Joint =10
 Rymax = 1.599999E+02 Joint =10
 Rmzmax= 9.465594E-12 Joint =10
```

BENDING MOMENT

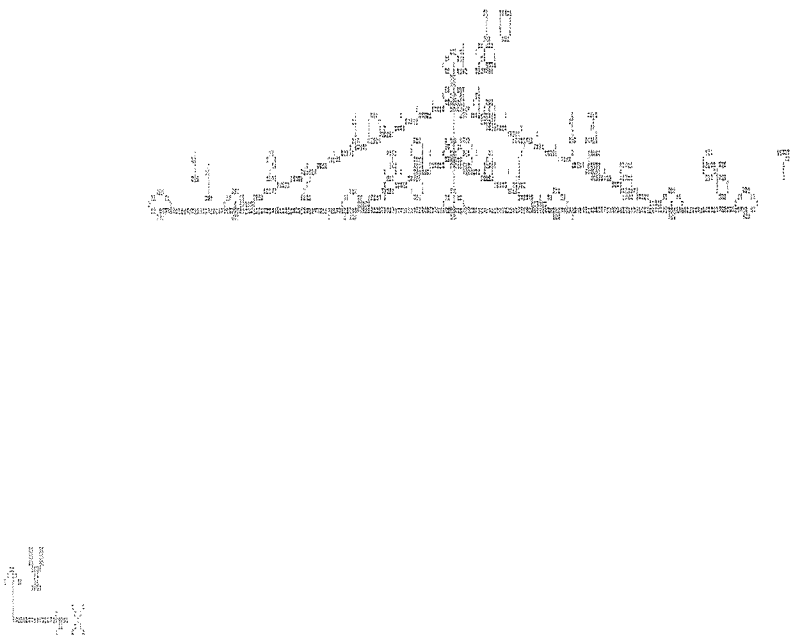

ENTER F5 FOR DEFLECTION DIAGRAM OR F6 FOR SHEAR DIAGRAM, OR
F7 FOR LOAD SELECTION MENU

F2PRINT F3DISP F5PREV F6NEXT F7MENU F8REDO F9SAVE

```
** R E S U L T S **
Deflections:
 Xmax = 3.077398E-04 Joint # 1
 Ymax = 2.191202E-03 Joint # 1
Bending Moment:
 Mmax = 1.889899E+02
 Member # 4   Joint # 4
Shear Force:
 Vmax = 9.933921E+00
 Member # 3
Axial Force:
 Amax = 1.599999E+02
 Member # 12
Reactions:
 RXmax = 6.949987E-05 Joint # 19
 RYmax = 1.599999E+02 Joint # 19
 RMZmax = 9.465594E-12 Joint # 19
```

SHEAR FORCE

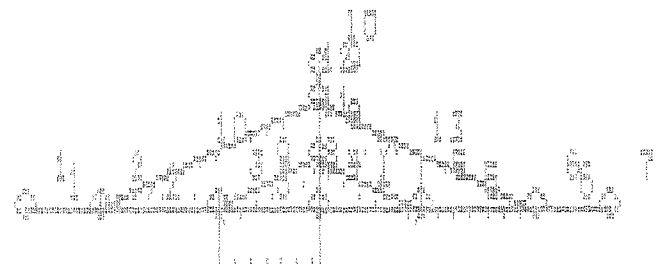

ENTER F5 FOR MOMENT DIAGRAM OR
F7 FOR LOAD SELECTION MENU

F2PRINT F3DISP F5PREV F7MENU F8REDO F9SAVE F10TOP

DE/CAASE Version 3.4
Module C 5 v3.4: General Two-Dimensional Frames
Developed by Desktop Engineering Inc.
Copyright (C)1985-1990 All Rights Reserved

..... INPUT VARIABLES .....

NO. OF JOINTS =10 NO. OF MEMBERS =13
NO. OF JOINTS WITH RESTRAINTS = 2 NO. OF JOINTS WITH APPLIED LOAD= 4
NO. OF DIFFERENT MEMBER PROPERTIES= 2

JOINT	X-COORD	Y-COORD	BOUNDARY TYPE	FORCE-X	FORCE-Y	MOMENT-Z
1	-6.000E+01	0.000E+00	0	0.000E+00	0.000E+00	0.000E+00
2	-4.450E+01	0.000E+00	0	0.000E+00	-4.000E+01	0.000E+00
3	-2.100E+01	0.000E+00	0	0.000E+00	-4.000E+01	0.000E+00
4	0.000E+00	0.000E+00	0	0.000E+00	0.000E+00	0.000E+00
5	2.100E+01	0.000E+00	0	0.000E+00	-4.000E+01	0.000E+00
6	4.450E+01	0.000E+00	0	0.000E+00	-4.000E+01	0.000E+00
7	6.000E+01	0.000E+00	0	0.000E+00	0.000E+00	0.000E+00
8	0.000E+00	1.000E+01	0	0.000E+00	0.000E+00	0.000E+00
9	0.000E+00	2.100E+01	2	0.000E+00	0.000E+00	0.000E+00
10	0.000E+00	2.800E+01	3	0.000E+00	0.000E+00	0.000E+00

MEMBER	JOINT-1	JOINT-2	PROP NO.
1	1	2	1
2	2	3	1
3	3	4	1
4	4	5	1
5	5	6	1
6	6	7	1
7	8	5	2
8	4	8	1
9	3	8	2
10	2	9	2
11	8	9	1
12	9	10	1
13	9	6	2

PROPERTY NO.	AREA	MOMENT OF INERTIA	ELASTIC MODULUS
1	1.790E+00	3.850E+00	1.010E+07
2	1.210E+00	1.660E+00	1.010E+07

..... RESULTS .....

MAXIMUM DEFLECTION Xmax = 3.0774E-04 JOINT = 1
Ymax = -2.1912E-03 JOINT = 1
MAXIMUM BENDING MOMENT = -1.8098E+02 MEMBER = 4 JOINT = 4
MAXIMUM AXIAL FORCE = 1.6000E+02 MEMBER = 12
MAXIMUM SHEAR FORCE = 9.9339E+00 MEMBER = 3
MAXIMUM REACTION Rx = 6.9499E-05 JOINT = 10
MAXIMUM REACTION Ry = 1.6000E+02 JOINT = 10
MAXIMUM REACTION Rmz = 9.4656E-12 JOINT = 10

	.....Deflections.....			.....Reactions.....		
JOINT	X-DEFLECTION	Y-DEFLECTION	Z-ROTATION	Rx	Ry	Rmz
1	3.0774E-04	-2.1912E-03	3.6404E-05	0.00E+00	0.00E+00	0.00E+00
2	3.0774E-04	-1.6269E-03	3.6404E-05	0.00E+00	0.00E+00	0.00E+00
3	1.8146E-04	-7.6622E-04	4.1409E-05	0.00E+00	0.00E+00	0.00E+00
4	1.6631E-07	-1.3427E-04	9.7752E-11	0.00E+00	0.00E+00	0.00E+00
5	-1.8146E-04	-7.6622E-04	-4.1408E-05	0.00E+00	0.00E+00	0.00E+00
6	-3.0774E-04	-1.6269E-03	-3.6404E-05	0.00E+00	0.00E+00	0.00E+00

7	[illegible]	[illegible]	[illegible]	[illegible]	[illegible]	[illegible]
8	7.1470E-10	-1.2190E-04	9.0059E-11	0.00E+00	0.00E+00	0.00E+00
9	0.0000E+00	-6.9743E-05	2.9193E-11	-5.78E-05	-1.25E-06	0.00E+00
10	0.0000E+00	1.0000E+00	-1.4596E-11	6.93E-05	1.60E+02	9.47E-12

MEMBER	AXIAL FORCE	SHEAR FORCE	MOMENT JOINT-1	MOMENT JOINT-2
1	1.3764E-05	4.1616E-05	3.1674E-04	3.2630E-04
2	-3.6295E+01	-1.9262E+00	-1.4351E+01	-3.0914E+01
3	-1.3876E+02	9.9339E+00	2.7631E+01	1.8098E+02
4	-1.3876E+02	-9.9339E+00	-1.8098E+02	-2.7631E+01
5	-3.6295E+01	1.9262E+00	3.0914E+01	1.4351E+01
6	7.1240E-06	7.7002E-06	1.0082E-04	1.8534E-05
7	5.9469E+01	-2.8488E+00	-6.2979E+01	3.2826E+00
8	1.9868E+01	4.3745E-06	-8.0399E-06	5.1785E-05
9	5.9469E+01	2.8488E+00	3.2826E+00	6.2979E+01
10	9.5935E+01	1.0875E+00	1.4351E+01	3.9159E+01
11	7.6148E+01	2.0620E-05	-1.0175E-04	3.2857E-04
12	1.6000E+02	-6.9479E-05	-4.8649E-04	-9.4656E-12
13	9.5935E+01	-1.0874E+00	-3.9156E+01	-1.4351E+01

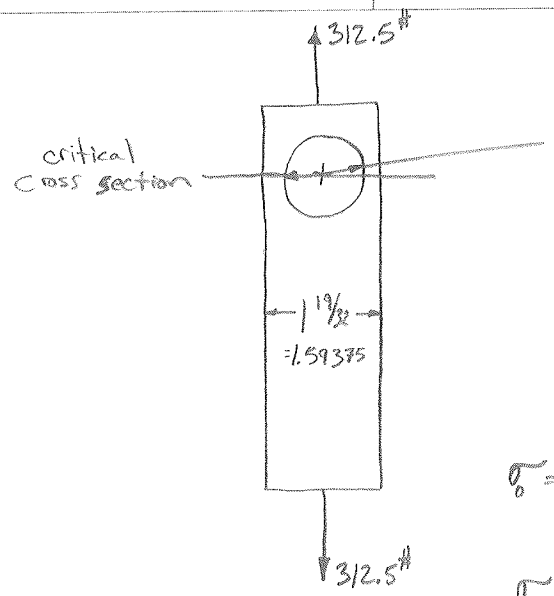

$F = \frac{1}{2}(1.25 * \text{Total Load})$ ½ due to symmetry, 1.25 due to design code

$t = \text{thickness} = 7/32 = .21875$

$$\text{Area} = (w-d)t$$
$$= (1.59375 - .78125).21875$$
$$= .177734375 \text{ in}^2$$

$$\sigma_0 = \frac{F}{A} = \frac{312.5^{\#}}{.177734375 \text{ in}^2}$$

$$\sigma_0 = 1758.24 \text{ psi}$$

Stress Concentration Factor:

$$d/w = \frac{.78125}{1.59375} = .4902$$

$$K_t = 2.2$$

Theoretical Stress

$$\sigma = \sigma_0 \cdot K_t$$
$$= (1{,}758.24 \text{ psi})(2.2)$$
$$= 3{,}868.13 \text{ psi}$$

$\sigma = 3{,}868.13$ psi

$\sigma_{ultimate} = 36{,}000$ psi

$\sigma_{allowable} = .6\,\sigma_u = 21{,}600$ psi

$\sigma < \sigma_a$ ∴ adequate strength

** However, Note that minimum edge distance is not met by AISC code.

3868.13 psi < 25% (21,600 psi) ∴ ⅛" may be subtracted from edge distance.

A ¾" hole requires 1⅛" edge distance to a sheared edge. (1¼" − ⅛")

Actual distance now is ⅞". Suggest "UNISTRUT" material Not be used.
Design Appropriate plate from scratch.

TABLE J3.4
Values of Spacing Increment C_1, in.

Nominal Dia. of Fastener	Oversize Holes	Slotted Holes		
		Perpendicular to Line of Force	Parallel to Line of Force	
			Short-slots	Long-slots[a]
≤ 7/8	1/8	0	3/16	1 1/2d − 1/16
1	3/16	0	1/4	1 7/16
≥1 1/8	1/4	0	5/16	1 1/2d − 1/16

[a]When length of slot is less than maximum allowed in Table J3.1, C_1 may be reduced by the difference between the maximum and actual slot lengths.

TABLE J3.5
Minimum Edge Distance, in.
(Center of Standard Hole[a] to Edge of Connected Part)

Nominal Bolt or Rivet Dia. (in.)	At Sheared Edges	At Rolled Edges of Plates, Shapes or Bars, Gas Cut or Saw-cut Edges[b]
1/2	7/8	3/4
5/8	1 1/8	7/8
3/4	1 1/4	1
7/8	1 1/2[c]	1 1/8
1	1 3/4[c]	1 1/4
1 1/8	2	1 1/2
1 1/4	2 1/4	1 5/8
Over 1 1/4	1 3/4 × Dia.	1 1/4 × Dia.

[a]For oversized or slotted holes, see Table J3.6.
[b]All edge distances in this column may be reduced 1/8-in. when the hole is at a point where stress does not exceed 25% of the maximum design strength in the element.
[c]These may be 1 1/4 in. at the ends of beam connection angles.

TABLE J3.6
Values of Edge Distance Increment C_2, in.

Nominal Dia. of Fastener (in.)	Oversized Holes	Slotted Holes		
		Perpendicular to Edge		Parallel to Edge
		Short Slots	Long Slots[a]	
≤ 7/8	1/16	1/8	3/4d	0
1	1/8	1/8		
≤1 1/8	1/8	3/16		

[a]When length of slot is less than maximum allowable (see Table J3.1), C_2 may be reduced by one-half the difference between the maximum and actual slot lengths.

Maximum Moment = 180.98 in-lb

Section modulus = 1.10 in^3

$$\sigma_{max_x} = \frac{M_x}{S_y} = \frac{180.98 \text{ in-lb}}{1.10 \text{ in}^3} = 164.5 \text{ psi}$$

$$\sigma_{max_y} = \frac{M}{S_y} = \frac{180.98 \text{ in-lb}}{.202 \text{ in}^3} = 895.94 \text{ psi}$$

$$\sigma_{axial} = \frac{F}{A} = \frac{(500^{\#})(1.25)}{1.59 \text{ in}^2} = 393.08 \text{ psi}$$

Conclusion:

Stresses are very low. Design is adequate.

Even though washers are not necessary, they may be beneficial.

3/4" Threaded Rod Stress analysis

Since the frame load is transmitted straight up into the support plates, No moment is generated on the rod.

Therefore, only shear stress is considered.

$$\tau = \frac{F}{A} = \frac{312.5^{\#}}{\pi(.375)^2} = 707.36 \text{ psi}$$

allowable stress = 21,600 psi
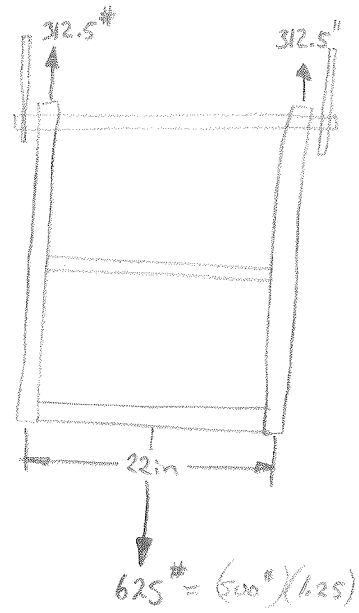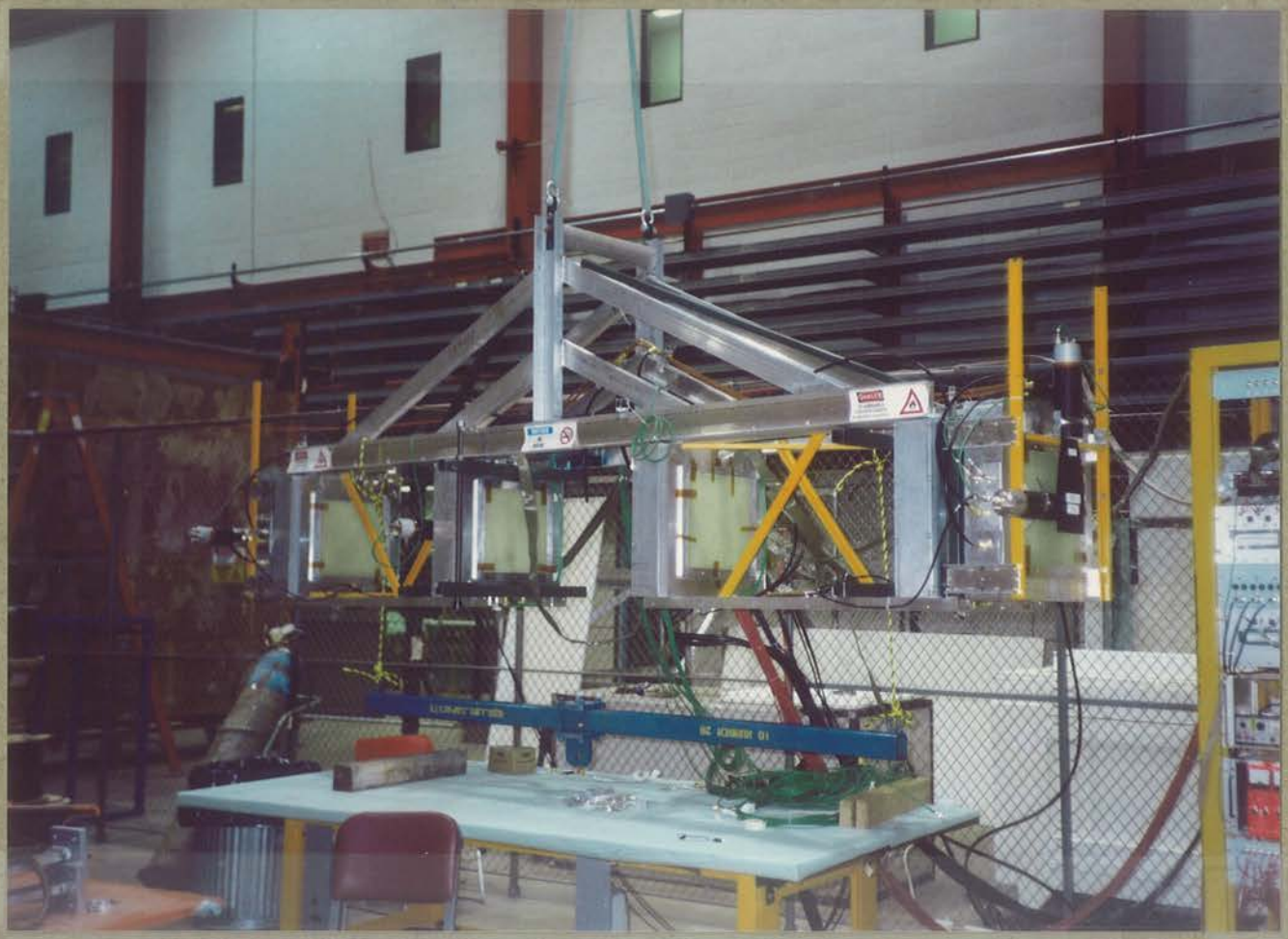
∴ adequate design.