SPREADER BAR

I.D. Nº 34 COLOR OF BAR: NONE

LOAD CAPACITY PAINTED ON BAR 4900 ~~TONS~~ LBS.

DATE CAP. & I.D. Nº PAINTED ON BAR 3-22-90

DATE OF LAST LOAD TEST. 3-22-90 BLUE/SIDE

TEST LOAD WEIGHT 6100 ~~TONS~~ LBS

TEST LOAD % 124.5%

STRESS CALCULATIONS:

DONE BY N. BOSEK

DATE 3-14-90

REMARKS:

SPREADER BAR Nº 34 PAINT COLOR NONE

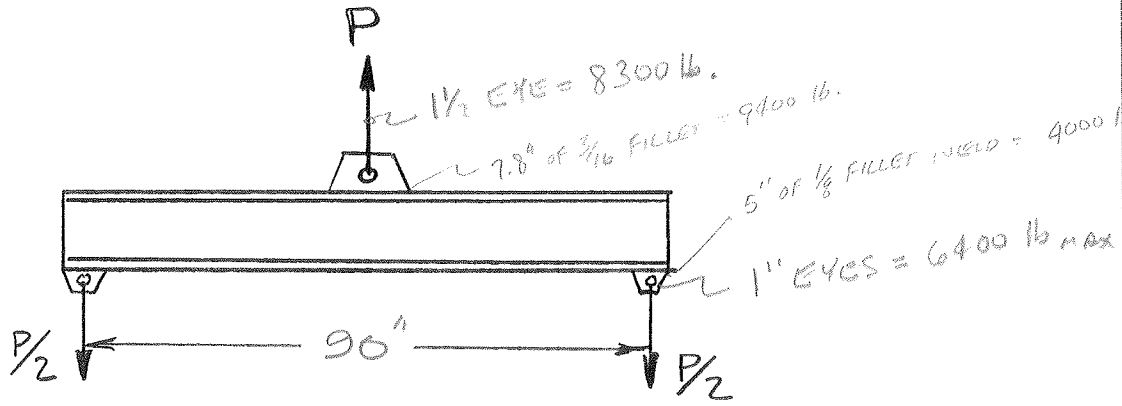

BEAM SIZE Box 8"x3"x¼ WALL

$d =$ 8 $\qquad A_w = d \cdot t_w =$ 4.0

$L =$ 90

$d/A_f =$ 8/.75 = 10.67 $\qquad M = \frac{PL}{4} =$ 22.5 P

$S_x =$ 9.18

$t_w =$ .250 x 2 = .5 $\qquad V = \frac{P}{2}$

BENDING STRESS:

$F_{b\ ALLOW} = 12{,}000$ psi

OR $F_{b\ ALLOW} = \frac{12 \times 10^6}{L \cdot d/A_f} = \frac{12 \times 10^6}{90 \times 10.67} =$ 12496 psi

USE THE LEAST

$\therefore f_{b\ MAX} = \frac{M}{S_x} = 12496 = \frac{22.5P}{9.18}$ $\quad P = 5098$ lb.

SHEAR STRESS:

$F_{V\ ALLOW} = \frac{.4\ F_y}{3} = 4800$ psi

$\therefore f_{V\ MAX} = \frac{V}{A_w} = 4800 = \frac{P}{2 \times 4}$ $\quad P = 38400$ lb

SUMMARY: $\therefore P =$ 5098 LBS. ~~TONS~~

BAR № 34

WITH
6100 LBS.
LOADING