SPREADER BAR

I.D. Nº 33 COLOR OF BAR: YELLOW

LOAD CAPACITY PAINTED ON BAR 25000 ~~TONS~~. LBS.

DATE CAP. & I.D. Nº PAINTED ON BAR 2-25-90

DATE OF LAST LOAD TEST. 2-23-90

2 "H" BLOCKS
1 "E" "
1 "A" "

TEST LOAD WEIGHT 31400 ~~TONS~~ LBS.

TEST LOAD % 125.6 %

STRESS CALCULATIONS:

DONE BY N. Bosek

DATE 2-23-90

REMARKS:

SPREADER BAR Nº 33 PAINT COLOR YELLOW

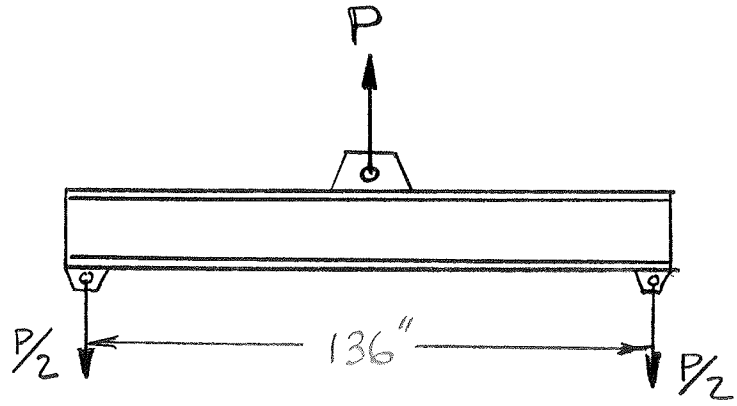

BEAM SIZE WF 16 x 45

$d = 16.12$

$L = 136$

$d/A_f = 4.07$

$S_x = 72.5$

$t_w = .346$

$A_w = d \cdot t_w = 5.58$

$M = \frac{PL}{4} = 34\,P$

$V = \frac{P}{2}$

BENDING STRESS:

$F_{b\ ALLOW} = 12{,}000$ psi

OR $F_{b\ ALLOW} = \frac{12 \times 10^6}{L \cdot d/A_f} = \frac{12 \times 10^6}{136 \times 4.07} = 21673$ psi

USE THE LEAST

$\therefore f_{b\ MAX} = \frac{M}{S_x} = 12{,}000 = \frac{34P}{72.5}$ $P = 25588$ LBS $= 12.79$ TONS

SHEAR STRESS:

$F_{V\ ALLOW} = \frac{.4\,F_y}{3} = 4800$ psi

$\therefore f_{V\ MAX} = \frac{V}{A_w} = 4800 = \frac{P}{2 \times 5.58}$ $P = 53568$ LBS.

SUMMARY: $\therefore P = 12.79$ TONS

NORM BOSEK

SPREADER BAR Nº 33 PAINT COLOR

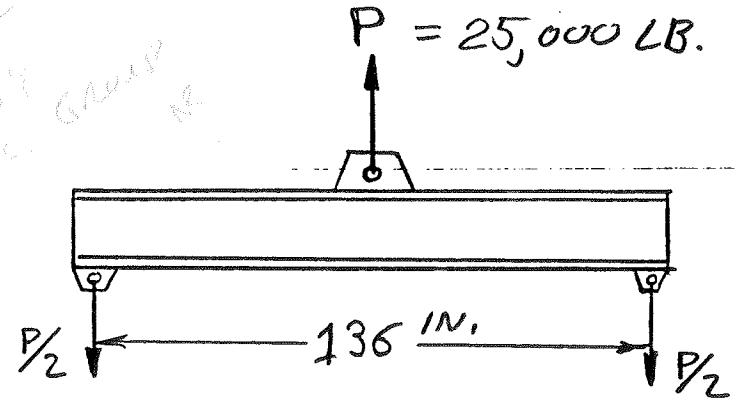

12.8 ton load
16 ton test ⇒ 4 "C" blocks

16 ton load
20 ton test ⇒ 4 "B" blocks

BEAM SIZE W16 x 45

$d = 16.13$ IN.

$L = 136$ IN

$d/A_f = 4.06$

$S_x = 72.7$ in^3

$t_w = 0.345$ in

$A_w = d \cdot t_w = 5.56$ in^2

$M = \frac{PL}{4} = 850{,}000$ in-lb.

$V = \frac{P}{2} = 12{,}500$ lb.

BENDING STRESS:

$F_{b\ ALLOW} = 12{,}000$ psi

OR $F_{b\ ALLOW} = \frac{12 \times 10^6}{L \cdot d/A_f} = \frac{12 \times 10^6}{136 \cdot 4.06} = 21{,}733$ psi

USE THE LEAST

$\therefore f_{b\ MAX} = \frac{M}{S_x} = 11{,}692$ psi

SHEAR STRESS:

$F_{v\ ALLOW} = \frac{.4\ F_y}{3} = 4800$ psi

$\therefore f_{v\ MAX} = \frac{V}{A_w} = \frac{12{,}500}{5.56} = 2{,}248$ psi

SUMMARY: $\therefore P = 12.5$ TONS

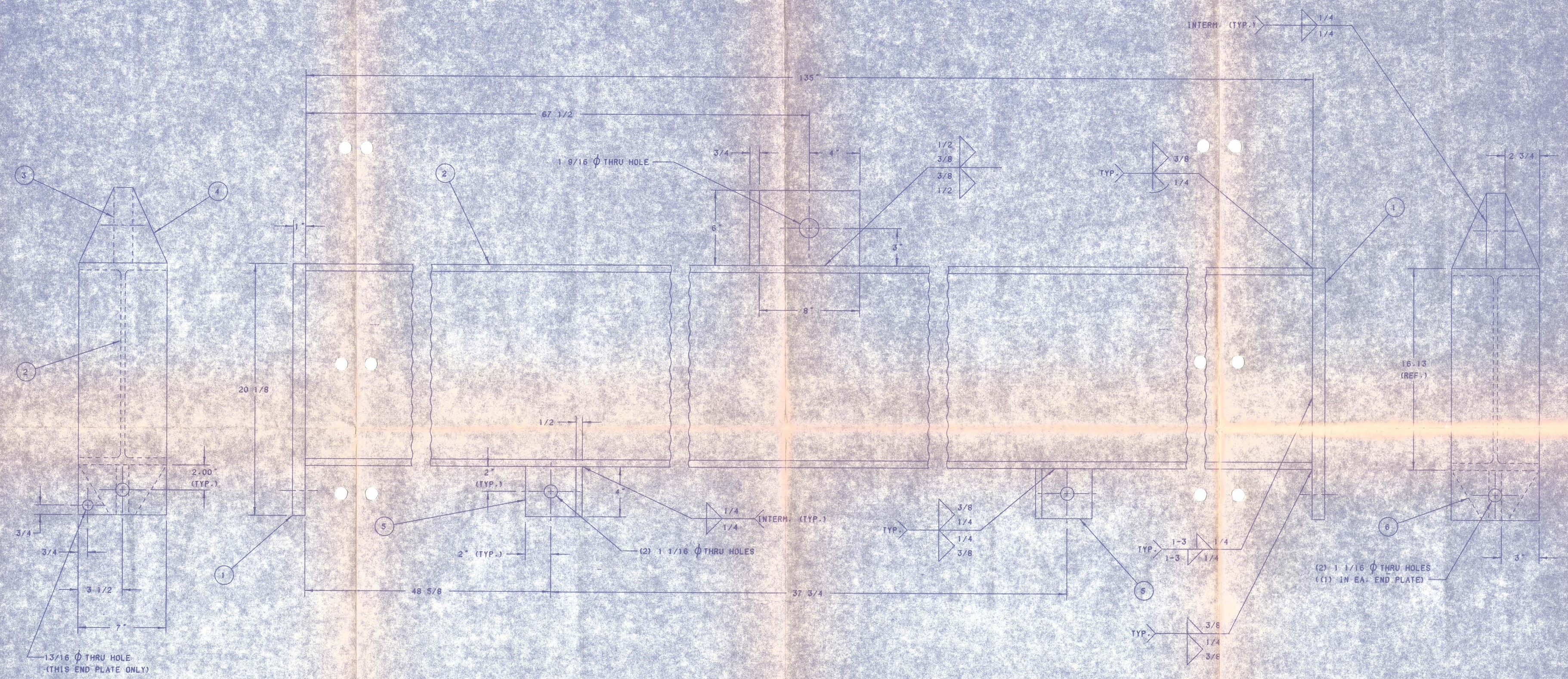

KEY	Q'TY	PART NO.	DESCRIPTION
6	2	STL.	4" x 7" x 1/2 PLATE
5	2	STL.	4" x 4" x 1" LUG
4	1	STL.	6" x 7" x 5/4 PLATE
3	1	STL.	6" x 8" x 1 1/2 LUG
2	1	STL.	W16 x 45 x 135" BEAM
1	2	STL.	1" x 7" x 20 1/8 END PLATE

UNITS ARE INCHES UNLESS OTHERWISE SPECIFIED.
ANSI STANDARD Y14.5 APPLIES.

CHANGE LETTER	CHGD. BY	CHKD. BY	DATE	CHANGE

3568D209

SURFACE FINISH EXCEPT AS NOTED:

DR. AMR
CHK'D
APPR'D
NO. REQ. 1

TOLERANCES UNLESS OTHERWISE SPECIFIED:
3 PLACE DECIMAL ±.005
2 PLACE DECIMAL ±.01
1 PLACE DEC. FRAC. ±1/32

MAT'L NOTED

ZEUS - B-CAL TOOLING
LIFTING AND ROTATING BEAM ASSEMBLY
LIFTING BEAM WELDMENT ASSEMBLY

PHYSICAL SCIENCES LABORATORY
UNIVERSITY OF WISCONSIN (608)873-6651

SCALE 1/4
DATE 12-28-89
USED ON: 3568E
DWG. NO. 3568D209

DRAWN BY PAPER DOGS CAD V3.2068

PRODUCED BY AMR
ON 01/03/90 AT 11:40
DRAWING FILENAME A209
PLOTTED AT SCALE 1/1

SPREADER BAR #33