SPREADER BAR

I.D. Nº 32 COLOR OF BAR: YELLOW

LOAD CAPACITY PAINTED ON BAR 5 (2) TONS.

DATE CAP. & I.D. Nº PAINTED ON BAR 2-16-90

DATE OF LAST LOAD TEST. 2-14-90 (2-16-90)

EM LIFTING FIXTURE
GRID LIFTING FIXTURE

TEST LOAD WEIGHT 6 (2) TONS

TEST LOAD % 120% +

STRESS CALCULATIONS:

DONE BY J. L. WESTERN + OTHERS

DATE -

REMARKS: THIS FIXTURE IS USED FOR BOTH EM LIFTING FIXTURE AND GRID LIFTING FIXTURE

LIFTING FIXTURE STRESSES (TS 12×12×1/4)

$M = PL = 10{,}000\,(30 + 13 + 1\tfrac{1}{4} - 4)$

$= 402{,}500$ PSI

$S = 44.1$

$F_{BR} = M/S = 402{,}500/44.1$

$= 9{,}127$ PSI $\leq 12{,}000$ PSI

BOTTOM PLATE

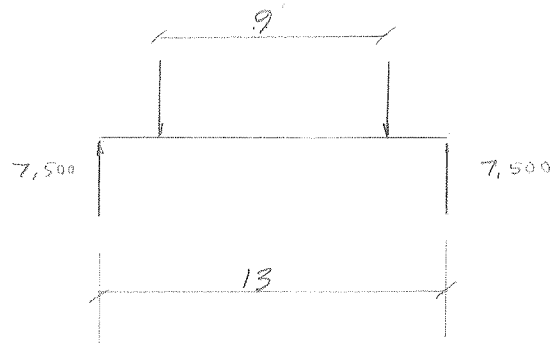

$M = 7{,}500\ (2) = 15{,}000$ IN-LB

$S = bd^2/6 = 8(1)^2/6 = 1.33\ IN^3$

$f_{bt} = M/S = 15{,}000/1.33 = 11{,}278$ PSI $< 12{,}000$ PSI

TOP PLATE

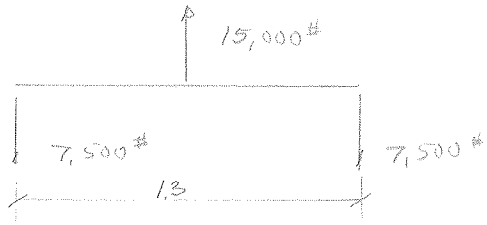

$M = \left(\frac{13}{2} - 1.5/2\right) 7500 = 43{,}125$

$S_{REQ} = M/f_{bt} = 43{,}125/12{,}000 = 3.60$

TRY PLATES 2 SIDE PLATES 1 × 3

$S_{ACTUAL} = 8.60/2.07 = 4.15$ SEE COMPUTER OUTPUT

$f_{bt} = 43125/4.15$

$= 10{,}380$ PSI $\leq 12{,}000$ PSI

Module A-1: Properties of Plane Sections

DIMENSION a = 10
DIMENSION b = 3
THICKNESS t = 1
THICKNESS t1 = 1

Area= 1.3999E+01
y = 5.0000E+00
x = 2.0714E+00
Iaa = 1.6466E+02
Ibb = 8.5952E+00
ra = 3.4295E+00
rb = 7.8354E-01
Cw = 1.1206E+02
J = 5.2266E+00
Ka = 5.9500E-01
Kb = 3.5699E-01
ex = 7.8125E-01
ey = 0.0000E+00

24. Channel

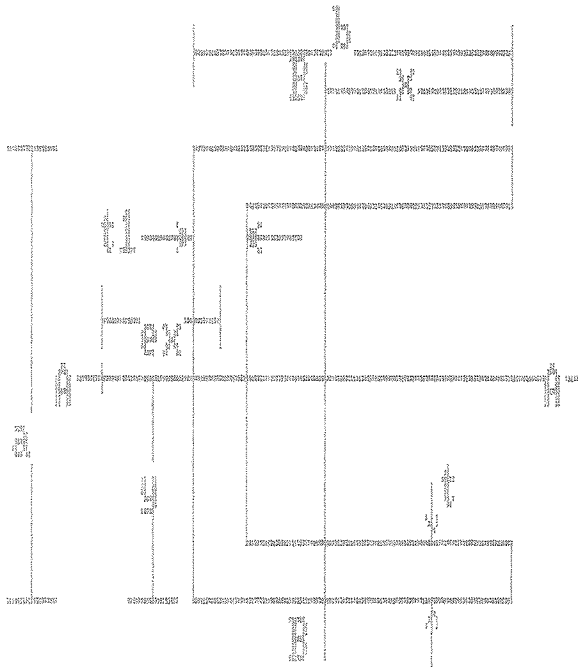

ENTER F7 FOR SECTION MENU

F2PRINT F3DISP F7MENU F8REDO F9SAVE

E740 DØ TEST
EM LIFTING FIXTURE

LIFTING BRACKET
DESIGN

J. L. WESTERN
FEB. 9, 1990

BRACKET STRESSES

$M = (5.5 + 1 + 1 + .5)\ 5{,}000 = 40{,}000$ IN-LB

$S = 29.341/3 = 3.26$ SEE COMPUTER OUTPUT

$\sigma_{OK} = 40{,}000/3.26 = 12{,}270$ PSI $\approx 12{,}000$ PSI

$\therefore$ ADEQUATE

E740 DØ TEST GRID LIFTING FIXTURE	LOAD TEST	J. L. WESTERN FEB. 16, 1990

E740 DØ TEST
GRID LIFTING FIXTURE
M&B 2-16-90

E740 DØ TEST
GRID LIFTING FIXTURE
M&B 2-16-90

DESIGN WEIGHT = 4000#

1 - A BLOCK = 4700#
4 - LEAD BRICKS = 100#

TOTAL WEIGHT 4800#

TEST LOAD = 4800/4000 = 120%

E740 Dϕ TEST EM LIFTING FIXTURE	LOAD TEST	J. L. WESTERN FEBRUARY 16, 1990

E740 Dϕ TEST
EM LIFTING FIXTURE
MAB 2-14-90

E740 Dϕ TEST
EM LIFTING FIXTURE
MAB 2-14-90

DESIGN WEIGHT = 10,000#

2 - D BLOCK	4050 × 2	=	8100
4 - F BLOCKS	1000 × 4	=	4000

TEST WEIGHT 12,100#

TEST LOAD = 12,100/10,000 = 120%

Module A-1: Properties of Plane Sections

DIMENSION a = 6
DIMENSION b = 3.44
DIMENSION b1 = .3125
THICKNESS t = .5

Area	=	5.0025E+00
y	=	3.0000E+00
x	=	1.7200E+00
Iaa	=	2.9341E+01
Ibb	=	3.4050E+00
ra	=	2.4218E+00
rb	=	8.2502E-01
Cw	=	2.5654E+01
J	=	3.3752E-01
Ka	=	3.1221E-01
Kb	=	5.7281E-01

23. Symmetrical I-Section

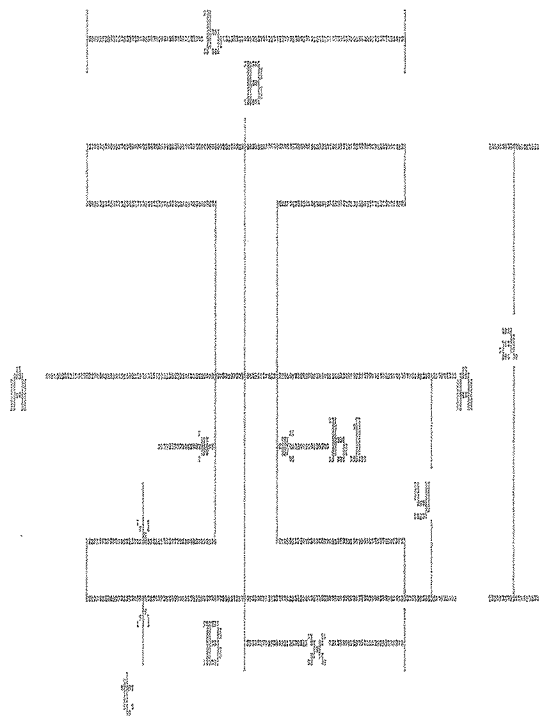

ENTER F7 FOR SECTION MENU

F2PRINT F3DISP F7MENU F8REDO F9SAVE

Rec'd. 11-20-89
9 1 Western

LBL-DØC-531

ECEM Handling Frame Stress and Deflection Analysis

D. Shuman

November 15, 1989

ECEM Handling Frame Stress and Deflection Analysis

1. FE Model

The ECEM handling and stacking fixture (also known as the "yellow frame", LBL dwg# 22F3634) is a welded beam assembly. It was modeled by Bill Edwards, using the ANSYS finite element program. The elements shown in fig. 1 are 3-D STIF4 elastic beam elements defined by a cross sectional area, two transverse (to the element direction) bending moments of inertia and two transverse thicknesses, used for calculating maximum bending stresses. The actual beams are 5"x3"x.25" thk. box, with the following properties:

Cross-sectional area:	A = 3.54"
Moment of inertia around transverse horizontal axis:	Iyy = 11.0 in^4
Moment of inertia around transverse vertical axis:	Izz = 4.93 in^4
Beam thickness, transverse horizontal:	tyy = 3.0"
Beam thickness, transverse horizontal:	tzz = 5.0"

Only half the frame is modeled, the other half being simulated by a plane of symmetry along the midline, where node rotations and translations are limited to the symmetry plane, as shown in figure 2. Displacement was fixed in the vertical direction at two nodes, simulating the support points of the frame. There are two possible support schemes; one scheme is when the frame is used as a lift fixture and the support points are at the lifting eye pads, as shown in figure 2. The other method of support is when the frame is used as a stacking or assembly fixture and is resting on a square table (not shown). These points of support are shown in figure 5. Loading on the central support pad in either case is estimated below to be 35% of the detector weight (10,000 lbs) with the remainder on the outer support pads, as shown in fig. 3. Only half the loads are used for locations on the symmetry plane.

2. Results

Maximum stress in the handling fixture is found to be ≈7300 psi (bending stress) during the lifting mode, at elements 73 and 79. The elements with the (20) highest stresses are listed on page 5. Maximum deflection is 0.090" in this same mode at a location shown on figure 4. For assembly and stacking, deflections are less than .029" (fig. 6) and maximum stress is ≈4500 psi. The (20) highest element stresses for this mode are listed on page 7.

3. Load proportioning analysis

The ECEM is assembled by placing the (unloaded) strongback (LBL dwg# 22F2656E), onto the handling fixture in a horizontal position, supported by the four outer support pads. The center support pad is then adjusted just to reach the central support tube and is locked in place. The detector is then assembled from there. Assuming the handling fixture is much stiffer than the ECEM strongback we can easily determine the resulting force on the central support pad.

Simply supported circular plate

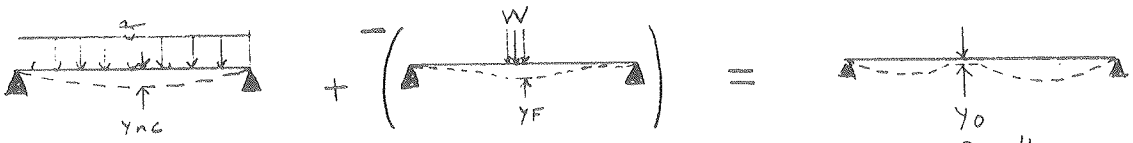

From Roark + Young Formulas for Stress & Strain table 27.

$$Y_{nc} = .064\frac{Qa^4}{D}; \quad \text{(case 10a)}$$

$$Y_F = \frac{Wa^2}{16\pi D}\left(\frac{3+\nu}{1+\nu}\right); \quad \text{(case 16)}$$

$$Y_o = .064\frac{Q_o a^4}{D} \quad \text{(case 10a)}$$

radius, $a = 44''$

$Q = \frac{10000\#}{\pi\, 44^2} = 1.644$ psi

$Q_o = \rho t = .3\,\#/in^3\,(.8'') = .24$ p

$$Y_F = Y_{nc} - Y_o = .064\frac{(Q-Q_o)a^4}{D} = \frac{Wa^2}{16\pi D}\left(\frac{3+\nu}{1+\nu}\right)$$

$$\therefore W = 16\pi(.061)(Q-Q_o)a^2\left(\frac{1+\nu}{3+\nu}\right) = 16\pi(.064)(1.644-.24\text{ psi})(44'')^2\left(\frac{1.326}{3.326}\right) = 3485\ \#$$

Fig 1, Element Plot, ECEM Handling Fixture (half)

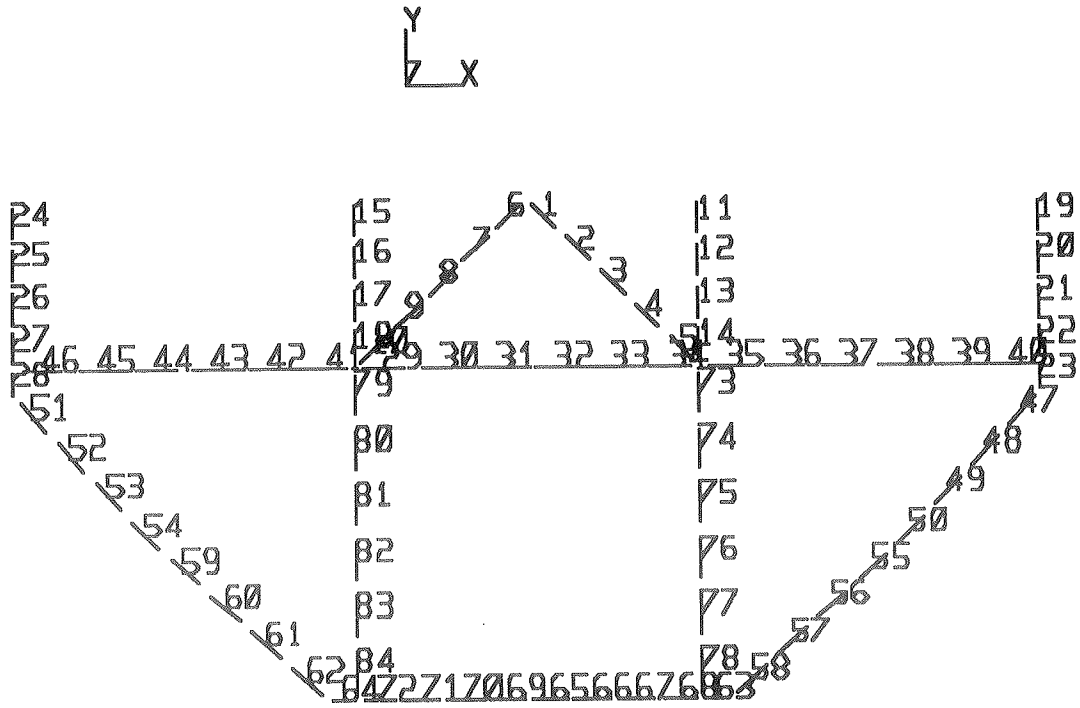

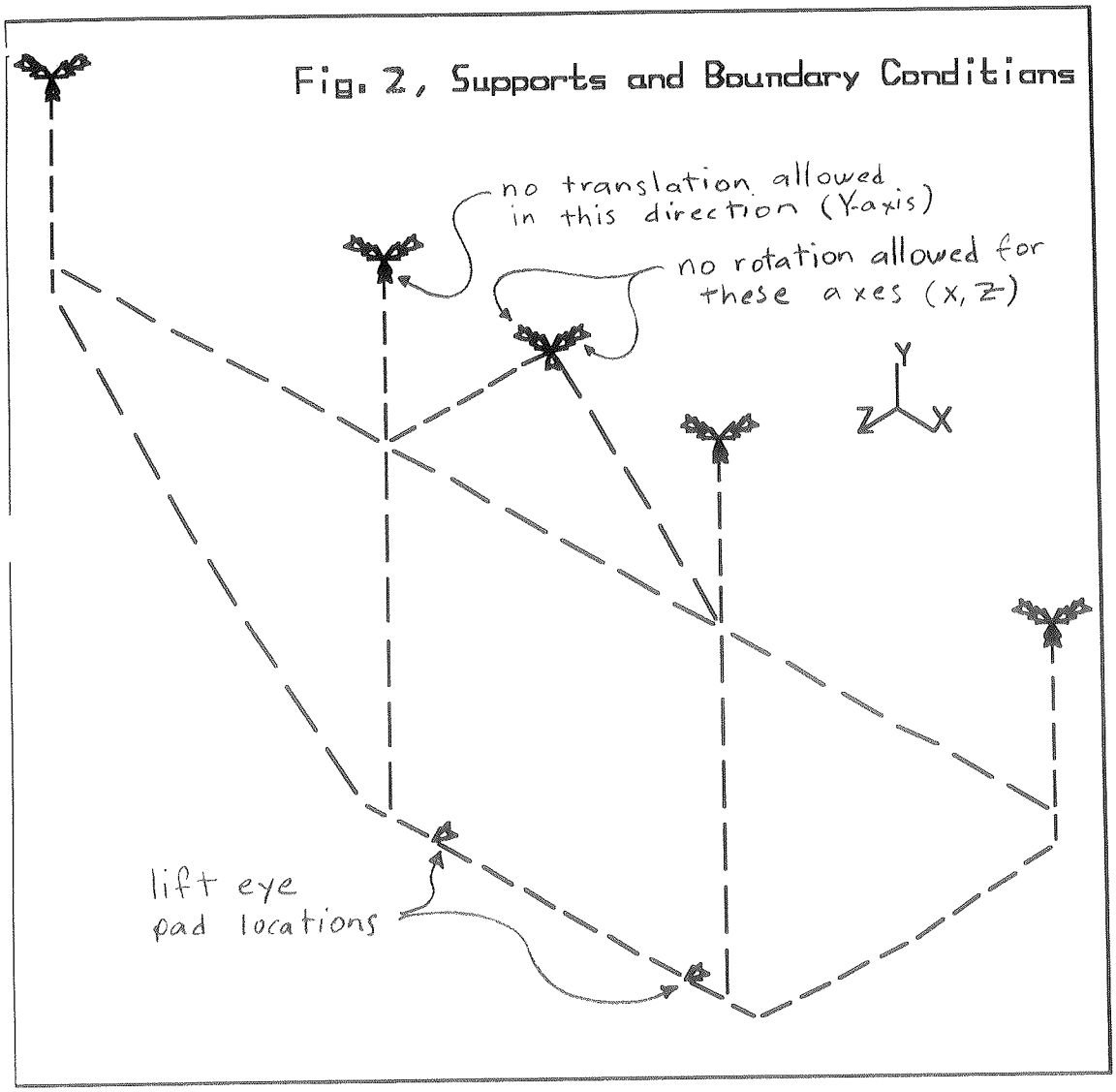
Fig. 2, Supports and Boundary Conditions
no translation allowed in this direction (Y-axis)
no rotation allowed for these axes (X, Z)
Y
Z
X
lift eye pad locations

Fig. 3, Applied Loads from ECEM

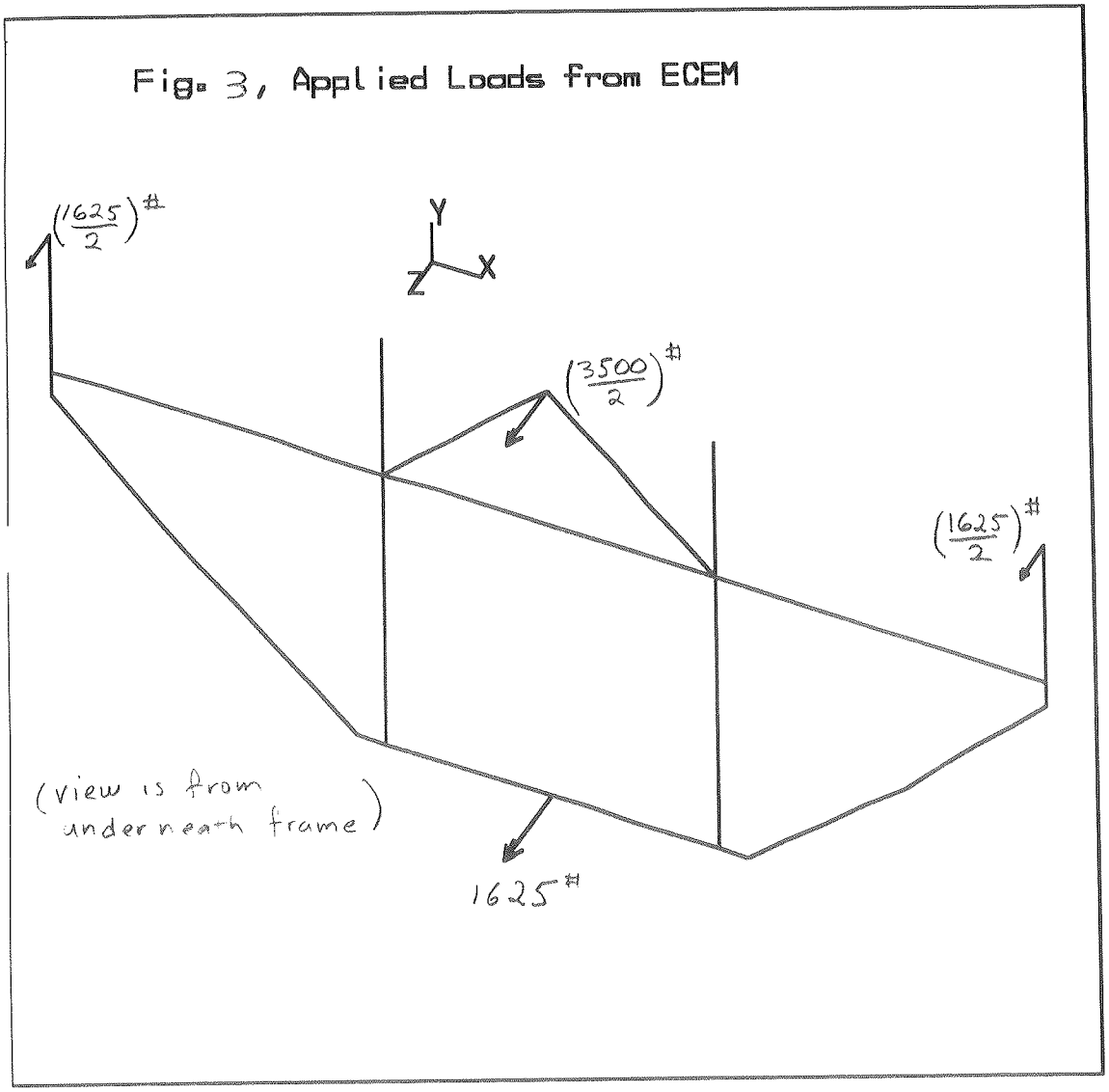

Fig. 4, Frame Displacements (Crane suspend)

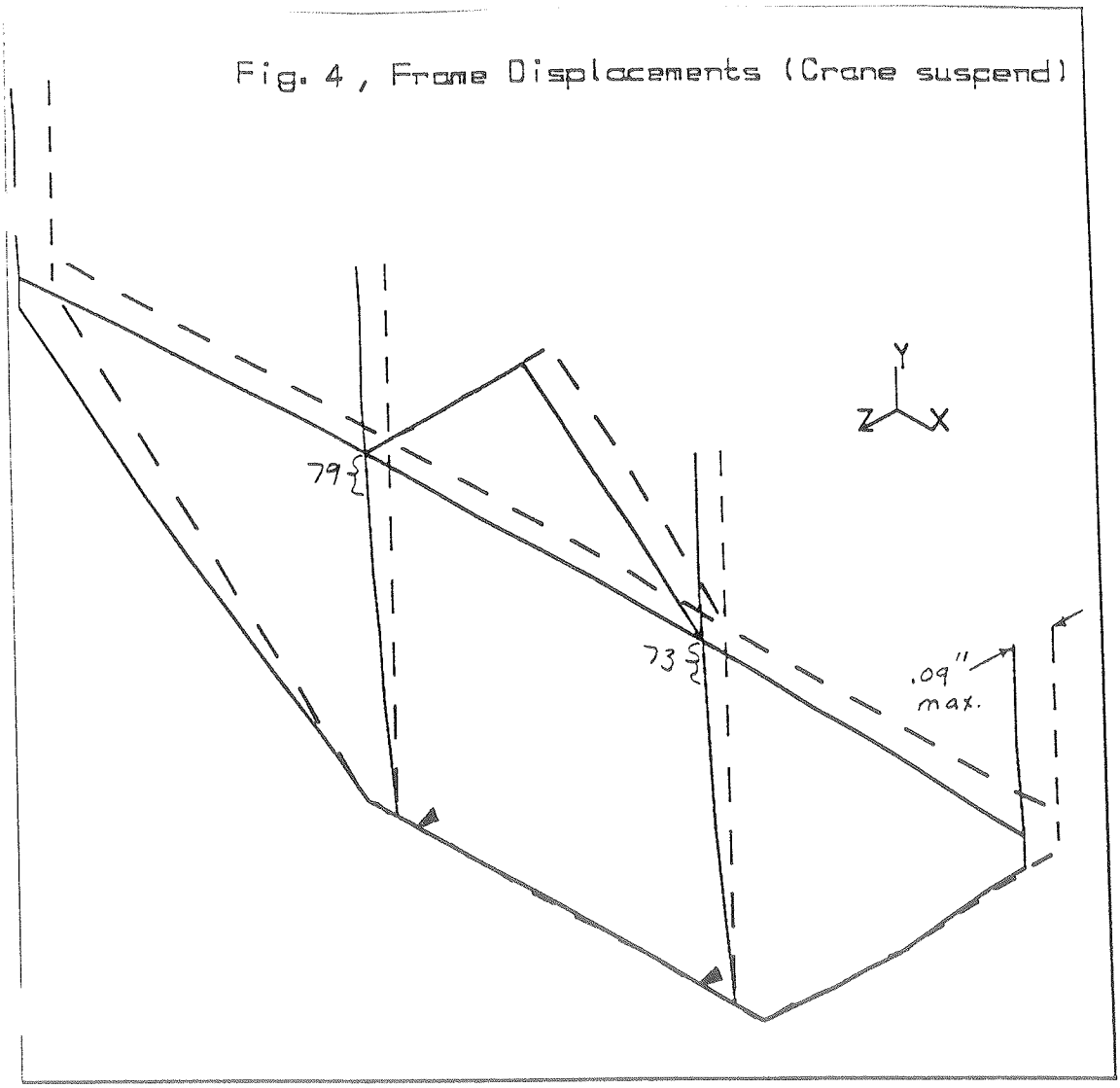

ANSYS 4.3
NOV 14 1989
18:12:35
POST1 DISPL.
STEP=1
ITER=1
DSYS=12

XV=1
YV=1
ZV=1
DIST=33.6
XF=-28
YF=-23
ZF=2.03
DMAX=.09
DSCA=37.4

Stresses during lifting

ELEM	SMAX
73	7267.2
79	7267.2
19	6569.5
24	6569.5
74	6021.8
80	6021.8
20	5900.1
25	5900.1
14	5703.5
13	5703.5
18	5703.5
12	5703.5
17	5703.5
11	5703.5
16	5703.5
15	5703.5
21	5230.7
26	5230.7
75	4776.4
81	4776.4

Fig. 5, Supports and Boundary Conds. (stacking)

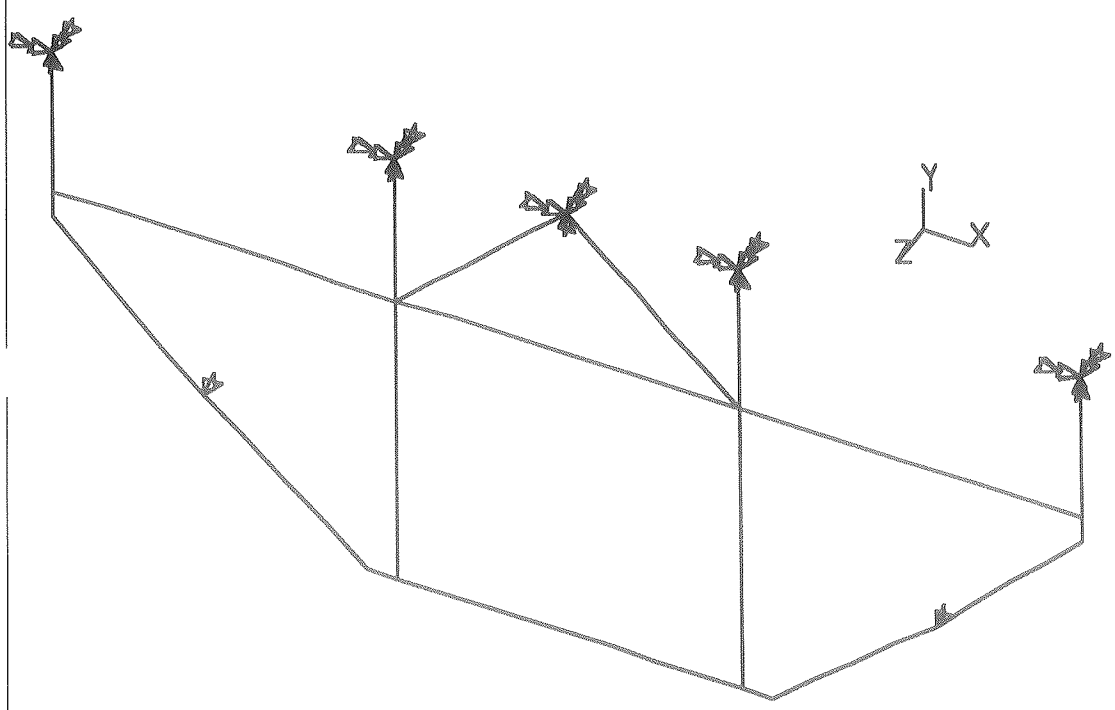

Fig. 6, Displacements (frame on stacking table)

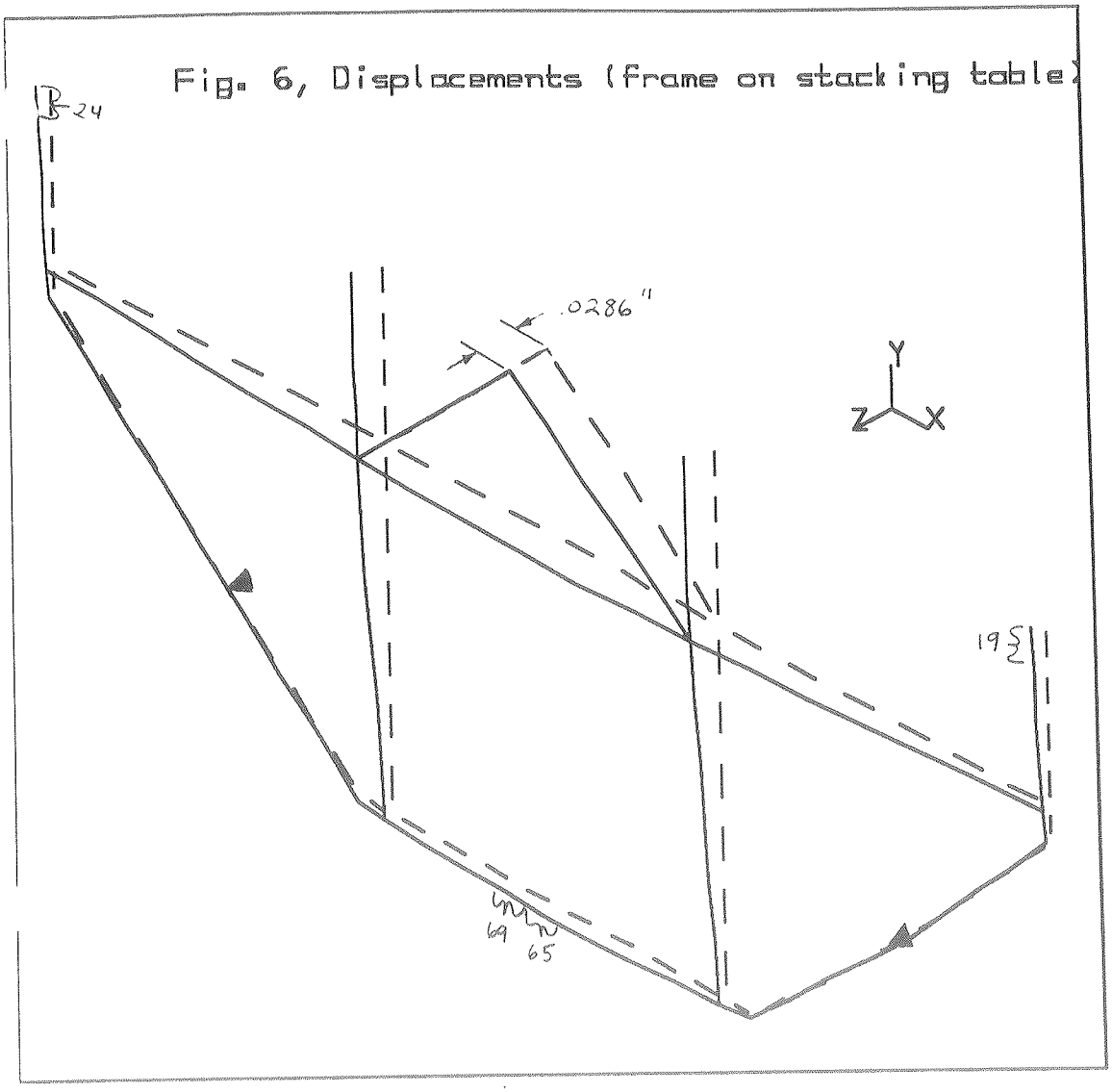

ANSYS 4.3
NOV 15 1989
17:16:23
POST1 DISPL.
STEP=1
ITER=1
DSYS=12

XV=1
YV=1
ZV=1
DIST=33.6
XF=-28
YF=-23
ZF=2.03
DMAX=.0286
DSCA=118

STRESSES DURING ASSEMBLY

ELEM	SMAX
19	4521.5
69	4521.5
65	4521.5
24	4521.5
6	4052.1
1	4052.1
70	3852.1
20	3852.1
66	3852.1
25	3852.1
55	-3393.8
59	-3393.8
2	3236.5
7	3236.5
71	3182.7
21	3182.7
26	3182.7
67	3182.7
72	2513.3
22	2513.3

SUPERCONDUCTING SUPER COLLIDER
Magnet Systems & Conventional Facilities Divisions
Universities Research Association
c/o Lawrence Berkeley Laboratory – MS 90/4040
Berkeley, California 94720
~~(415) 486-6568 FTS 451-6568~~

TELEFAX COVER SHEET

To: Jeff Western *Telefax No.:*

From: Derek Shuman
SSC Central Design Group

This transmission consists of 5 page(s), excluding this cover sheet.

Date: 11/8/89

Time: 6:15 PST

TRANSMITTED FROM:

Telefax No.
FTS 451-6119
Commercial (415) 486-6119
Verification No.
FTS 451-6568
Commercial (415) 486-6568

EC-EM LIFTING FRAME STIFFNESS -VS- STRONGBACK STIFFNESS

L.R.E. 9/2/89

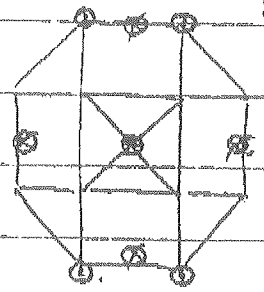

⊙ SUPPORTS (HOIST RINGS)

⊗ LOAD POINTS (EC-EM WT.)

Jeff - we are sending more info later - Derek

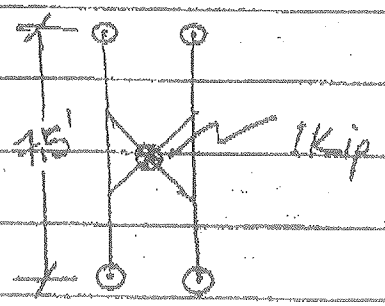

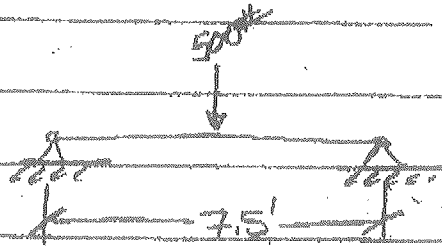

$$\delta = \frac{Wl^3}{48EI} = \frac{500(90)^3}{48(30E6)19.3} = .0131''$$

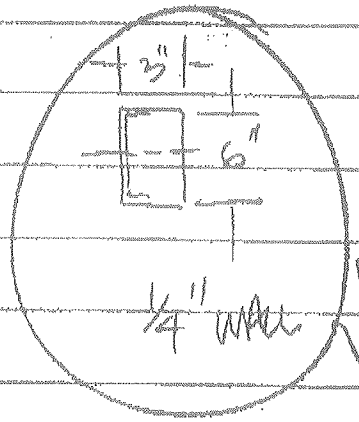

$$I \simeq \frac{3(6)^3 - 2.5(5.5)^3}{12} = 19.3 \text{ in}^4$$

NOTE! Final design is 3"x6"x1/4 WALL

MANY TIMES STIFFER!

$$\frac{k_{FIN.}}{k_{STRONG}} \cong 38$$

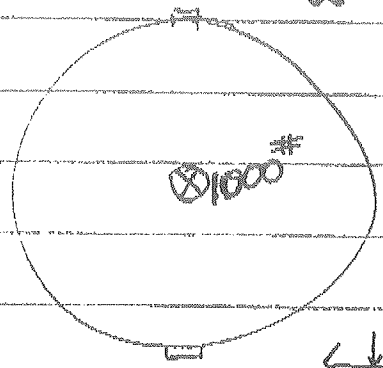

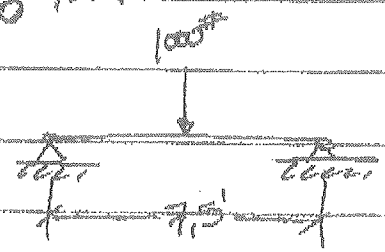

$$\delta = \frac{Wl^3}{48EI} = \frac{1000(90)^3}{48(30E6)1.02} = 0.494''$$

$$I = \frac{2d(.5)^3}{12} = 1.02 \text{ in}^4$$

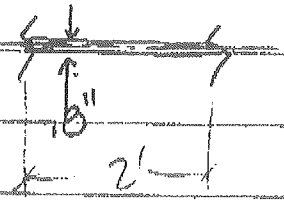

LIRF 9/2

— HOW SMALL CAN FRAME MEMBERS BE? :

⊙ SUPP'T PTS, ⊗ LOAD PTS.

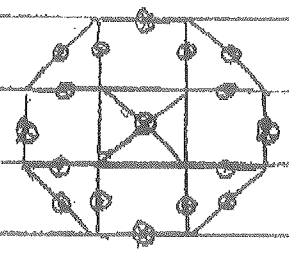

STACKING (ON TABLE)

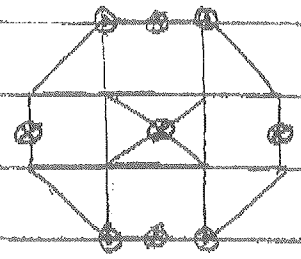

LIFTING (HOIST RINGS)

CENTER SECTION:

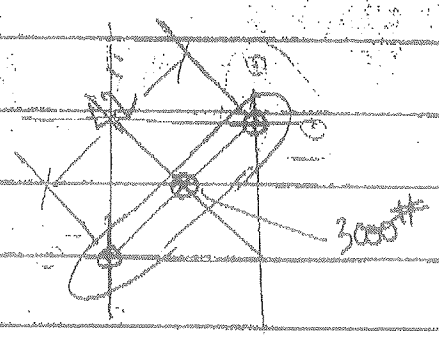

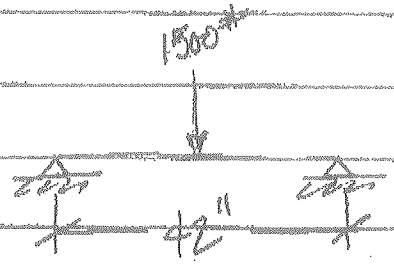

$$\delta = \frac{Wl^3}{40EI} = \frac{1500(42)^3}{40(3000)\,7.1} = \boxed{0.011''}$$

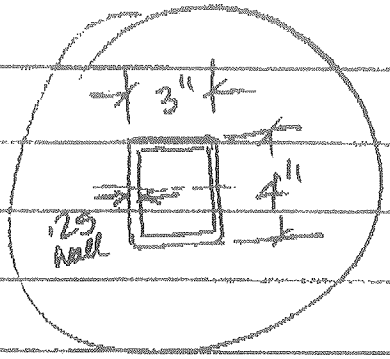

$$I_{3\times4} = \frac{3(4)^3 - 2.5(3.5)^3}{12} = 7.1\ in^4$$

$$\sigma = \frac{Mc}{I} = \frac{1500(42)\ 2''}{4\ (7.1)} = \boxed{4440\ psi}$$

NOTE: FINAL DESIGN IS 3×5"×1/4 WALL

KRE 9/2/0

2 CENTER BEAMS DURING LIFTING:

R & Y CASE 1 f (TABLE 3)

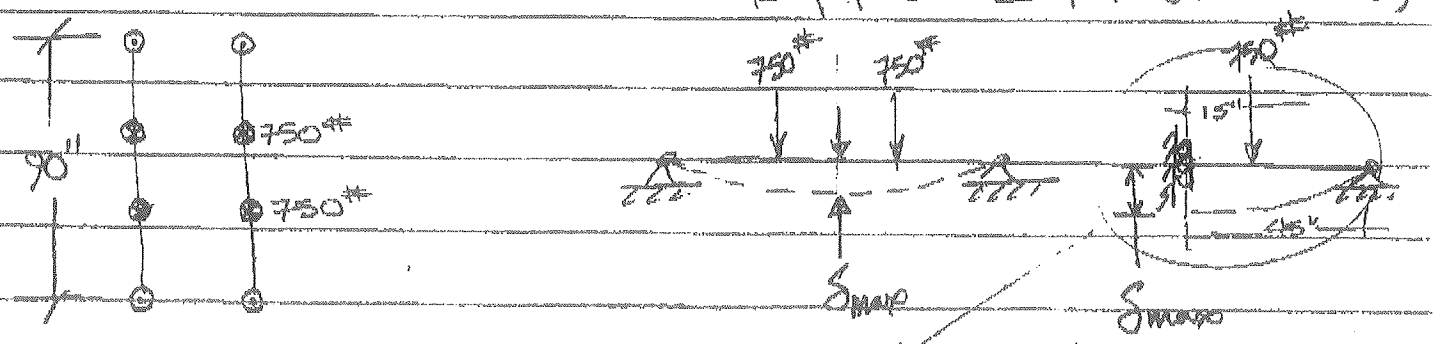

$$\delta_{max} = \frac{W(l-a)}{6EI}\left(2l^2 + 2al - a^2\right)$$

$\boxed{I = 7.1 \text{ in}^4}$ low

$$= \frac{750(45-15)}{6(30E6)\,7.1}\left(2(45)^2 + 2(15)45 - (15)^2\right)$$

$$M = W(l-a) = 22{,}500 \text{ lb-in} = \boxed{0.091''}$$

$$\sigma_{max} = \frac{Mc}{I} = \frac{22{,}500(2)}{7.1} = \boxed{6{,}340 \text{ psi}}$$

∴ SUMMING THE CENTER CROSS MEMBERS & CENTER (FULL LENGTH) BEAMS, WE GET A TOTAL DEFLECTION (WORST LOAD & GEOM. CASE) OF;

$$.091 + .011 = .102 \quad \text{or} \quad \boxed{0.10''}$$

WRE 9/2/98

SIDE BEAMS :

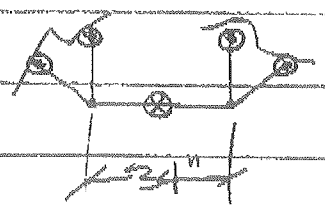

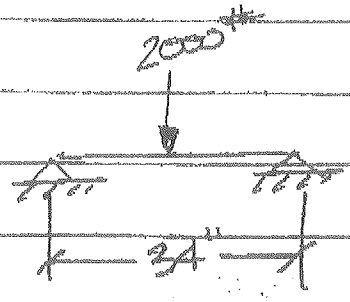

$\boxed{I = 7.1\ (3\times4")}$

low

$$\delta = \frac{wl^3}{48EI}$$

$$= \frac{2000(34)^3}{48(30E6)\,7.1} = \boxed{0.008"}$$

$$M = \frac{wl}{4} = \frac{2000(34)}{4} = 17{,}000\ \#\text{-in}$$

$$\sigma = \frac{Mc}{I} = \frac{17{,}000\,(2)}{7.1} = \boxed{4{,}790\ \text{psi}}$$

WHAT IF WE GO TO 5x3 RECT. TUBING

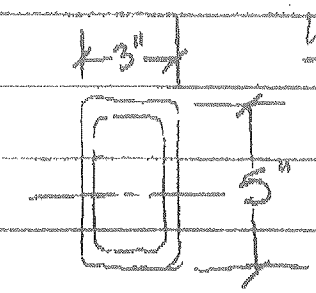

$$I = \frac{3(5)^3 - 2.5(4.5)^3}{12} = \underline{12.26\ \text{in}^4}$$

-VS- $7.1\ \text{in}^4$

1/4" WALL

∴ deflections & stresses would be reduced by :

$$\frac{12.26}{7.1} = \underline{1.73} \qquad \left(\max \delta \simeq \frac{.10}{1.73} = \underline{0.058"}\right.$$

STRENGTH OF WELDED POST (4 PLCS) ON LIFTING FRAME WRE 10/25/8

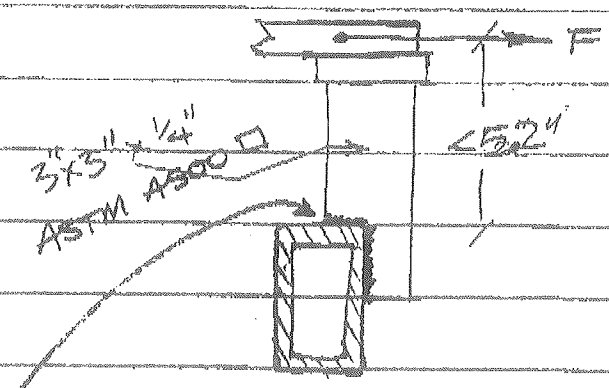

$F \cong 11{,}000$ (NO FACTOR) $\div 4 = 2{,}750$ lbs.

$M = 5.2''(2{,}750\#) = 14{,}300$ lb-in

$I \cong \frac{(3)^4 - (2\frac{1}{2})^4}{12} = 3.5 \text{ in}^4$ ✓

$\sigma_{B\,@\,\text{HORIZ. WELD}} = \frac{14{,}300(1.5)}{3.5} = \underline{6{,}130 \text{ psi}}$

ASTM A500 : $S_{YLD.} = 46{,}000$ psi

$\times 2/3$ (FOR WELD)

$= 30{,}670$ ALLOW.

WHICH GIVES US A F.S. OF :

$F.S. = \frac{30670}{6130} = \boxed{4.77}$ (FINE)

>3

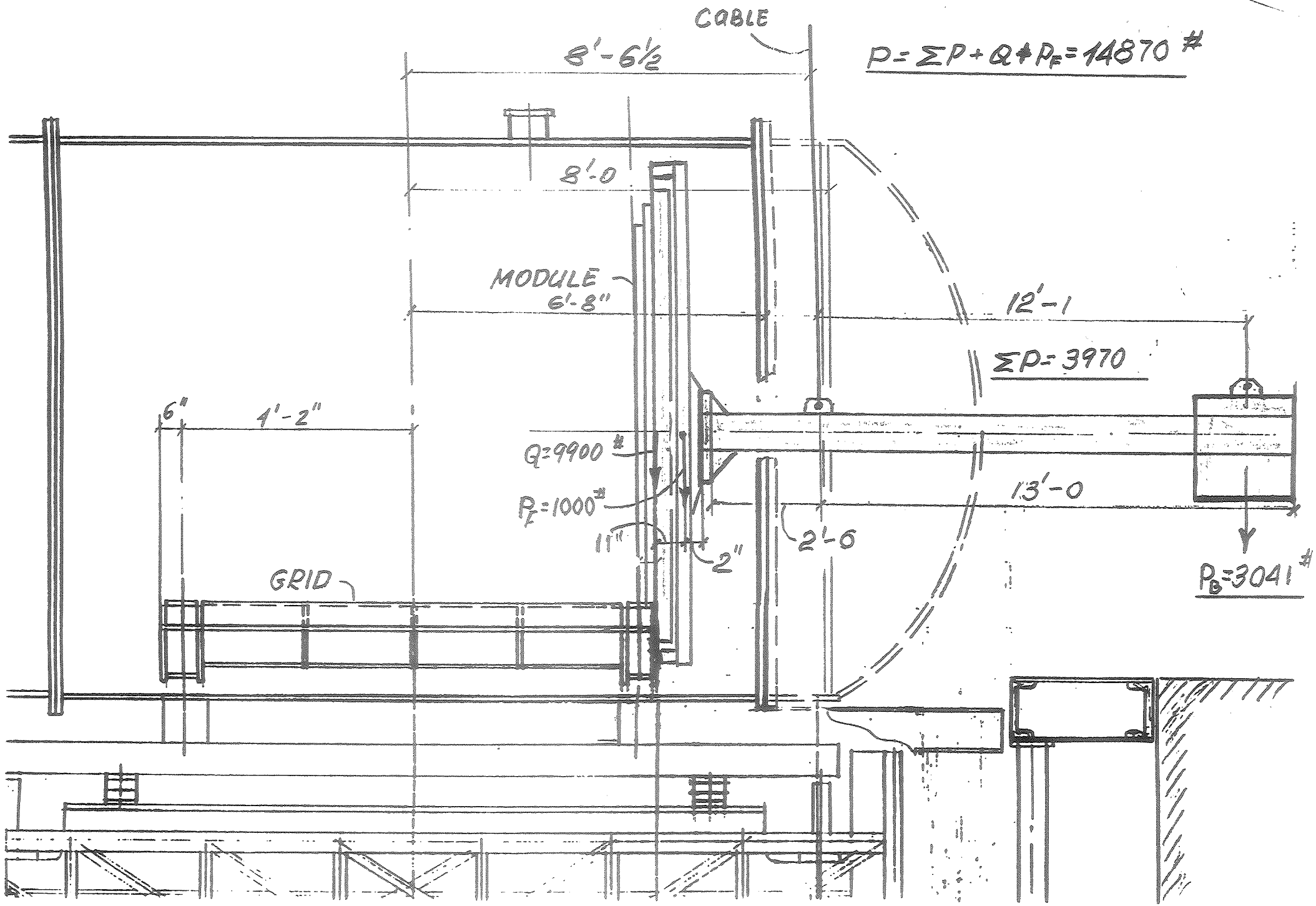
CABLE
P = ΣP + Q + P_F = 14870 #
8'-6½
8'-0
MODULE
6'-8"
12'-1
ΣP = 3970
6"
1'-2"
Q = 9900 #
P_F = 1000 #
13'-0
11"
2"
2'-6
P_B = 3041 #
GRID

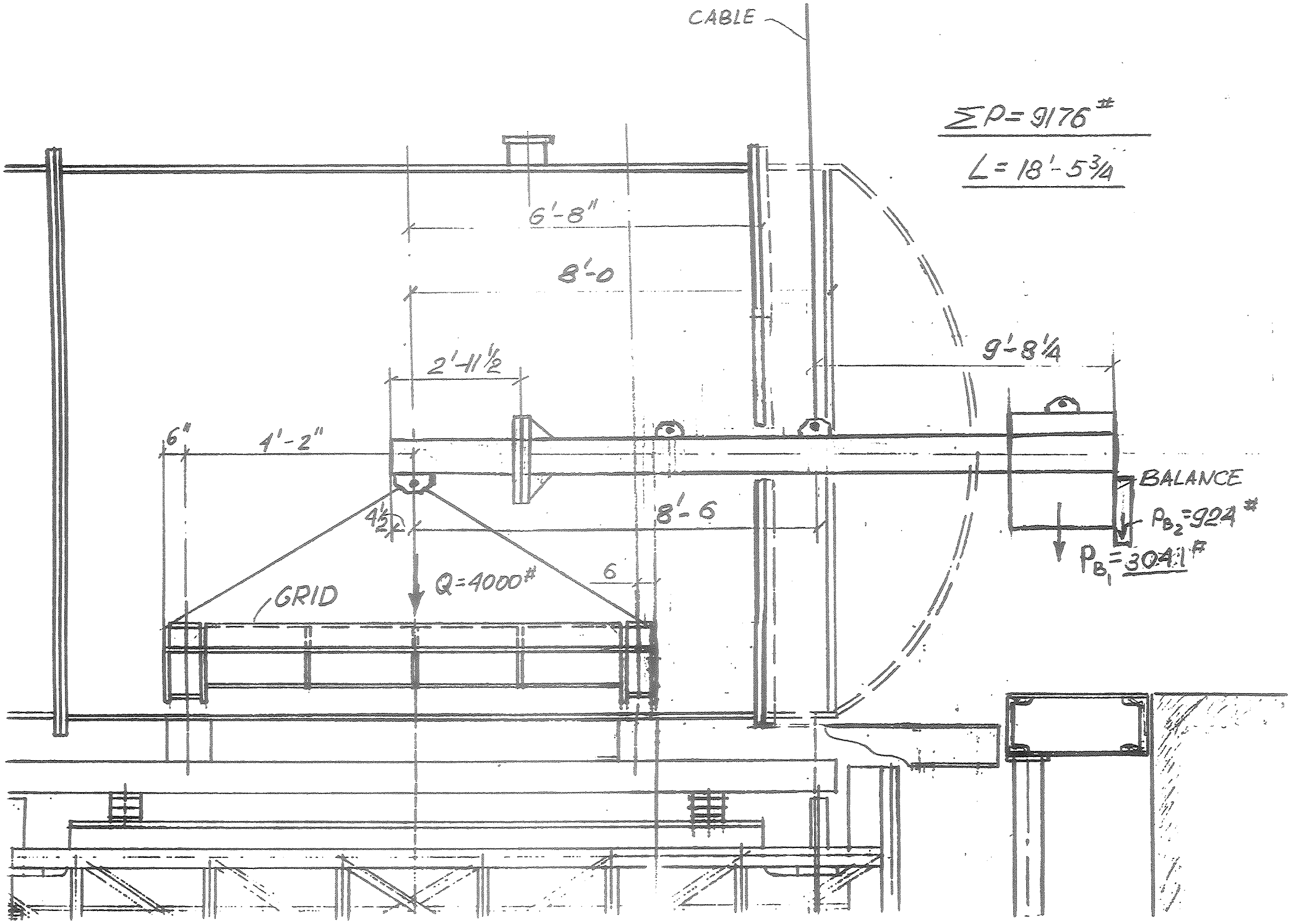
CABLE
$\Sigma P = 9176^{\#}$
$L = 18'-5\frac{3}{4}$
6'-8"
8'-0
2'-11½
9'-8¼
6"
4'-2"
BALANCE
$P_{B_2} = 924^{\#}$
$P_{B_1} = 3041^{\#}$
8'-6
4½
Q=4000#
6
GRID

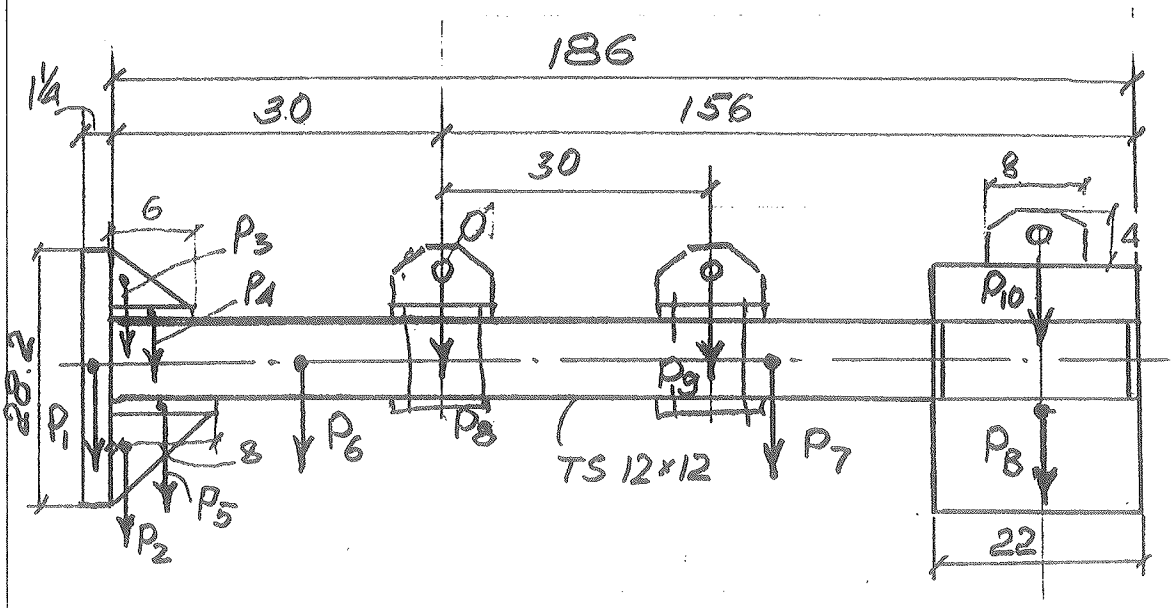

1. Compute weight of structures

$$P_1 = .284 \times \left[(21 \times 28.2) - (19.34 \times 3.35) - (10.5 \times 2)\right] \times 1.5 =$$

$$= .284 \times 506.411 \times 1.25 = 179.8^{\#}$$

$$P_2 = .284 \times 0.5 \times \frac{8 \times 8}{2} = 4.54^{\#}$$

$$P_3 = .284 \times 0.5 \times \frac{6 \times 6}{2} = 2.56^{\#}$$

$$P_4 = .284 \times 0.5 \times 6 \times 12.5 = 10.65^{\#}$$

$$P_5 = .284 \times 0.5 \times 8 \times 12.5 = 14.2^{\#}$$

$$P_6 = 39.43 \times 30 : 12 = 98.6^{\#}$$

$$P_7 = 39.43 \times 155.5 : 12 = 510.9^{\#}$$

$$P_8 = P_9 = .284 \cdot \left[2(.5 \times 8 \times 16) + \left[1.5 \times \left[(8 \times 4) - \left(2.5^2 + \frac{3.14 \cdot 1.32^2}{4}\right)\right]\right]\right] =$$

$$= 47^{\#}$$

$$P_{10} = .284 \cdot 1.5 \cdot 24.4 = 10.39^{\#}$$

Total weight excluding balances

$$\Sigma P' = 925.64^{\#}$$

2. Compute ballance weight

$$M_{P_B} = \Sigma M_L - \Sigma M_R$$

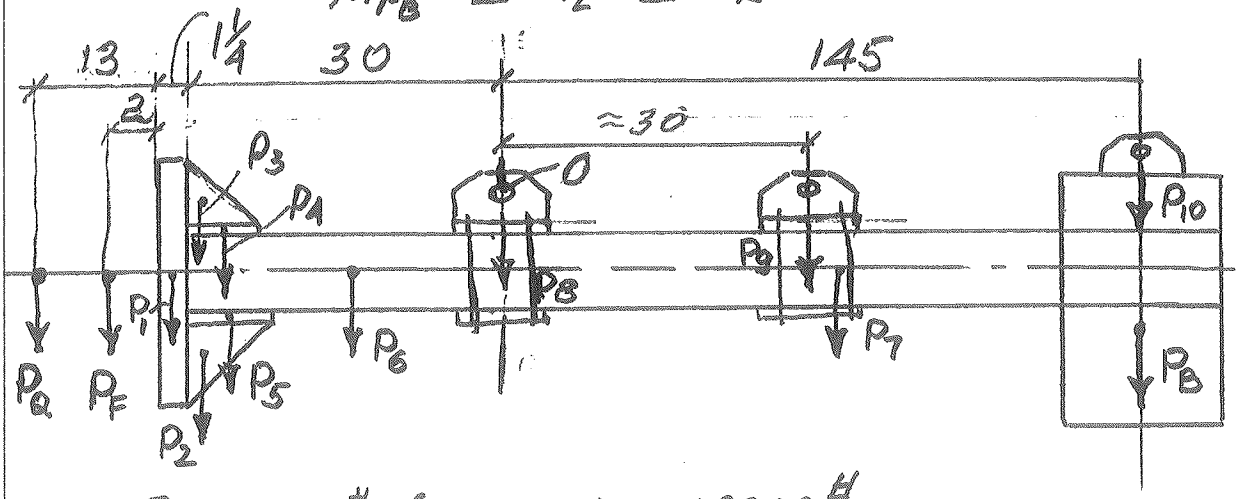

$P_Q = 9900^{\#}$ (MODULE) $\approx 10000^{\#}$

$P_F = 1000^{\#}$ (FIXTURE)

Compute weight moments

a) MOM. LEFT SIDE

$M_Q = 10000 \cdot 44.25 = 442500$ p·in

$M_F = 1000 \cdot 33.25 = 33250$ p·in.

$M_1 = 179.8 \cdot 30.625 = 5506.38$ p·in.

$M_2 = 4.54 \times 27.4 = 124.4$ p.in.

$M_3 = 2.56 \times 28 = 71.68$ p·in

$M_4 = 10.65 \times 27 = 287.55$ p·in

$M_5 = 14.2 \times 26 = 369.2$ p·in

$M_6 = 98.6 \times 15 = 1479.0$ p·in.

$$\Sigma M_L = 483508.21 \text{ p·in.}$$

b) MOM right SIDE

$M_9 = 47 \cdot 30 = 1410$ p·in

$M_7 = 510.9 \cdot 77.75 = 39722.5$ p·in

$$M_{10} = 10.39 \times 145 = 1506.55 \text{ p·in}$$

$$\Sigma M_R = 42639 \text{ p·in.}$$

$$M_B = \Sigma M_L - \Sigma M_R = 483508 - 42639 =$$
$$= 440869 \text{ p·in}$$

$$M_B = P_B \times 141$$

$$P_B = \frac{440869}{145} = 3040.5 \approx 3041 \text{ p·in.}$$

Compute total weight of lifting fixture including module, fixture and balance weight

$$\Sigma P' = \Sigma P_{L.F} + P_B = 3966.64^{\#} \quad \Sigma P_{L.F} = 925.64^{\#}$$

$$\Sigma P = \Sigma P' + P_Q + P_F = 3970 + 9900 + 1000 = 14870^{\#}$$

$$\Sigma P = 14870^{\#} < [P] = 15000^{\#}$$

[P] - max lifting - one crane

O. K.

3. Balance dimensions determination

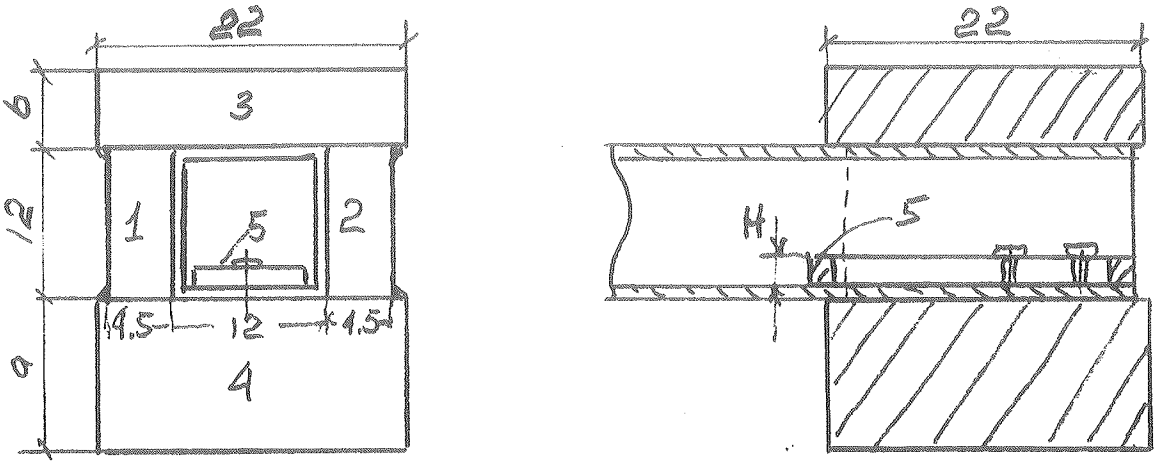

$$P_B = P_1 + P_2 + P_3 + P_4 + P_5 = 3041^{\#}$$

$P_1 = P_2 = .284 \times 21 \times 12 \times 4.5 = 322.06^{\#}$

$P_3 + P_4 = .284 \times 22 \times 22 \times 16.875 = 2319.57^{\#}$

$a = 12''$

$b = 4\frac{7}{8}$

$P_3 = .284 \times 22 \times 22 \times 12 = 1649.47^{\#}$

$P_4 = 670.1^{\#}$

$P_5 = P_B - P_1 - P_2 - P_3 - P_4 = 77.3^{\#}$

$$H = \frac{77.3}{.284\,(11 \times 22 - 20 \times 75)} = 1.19$$

$$\underline{H = 1\tfrac{1}{4}}$$

4. Compute distance to point of equilibrium grid lifting fixture

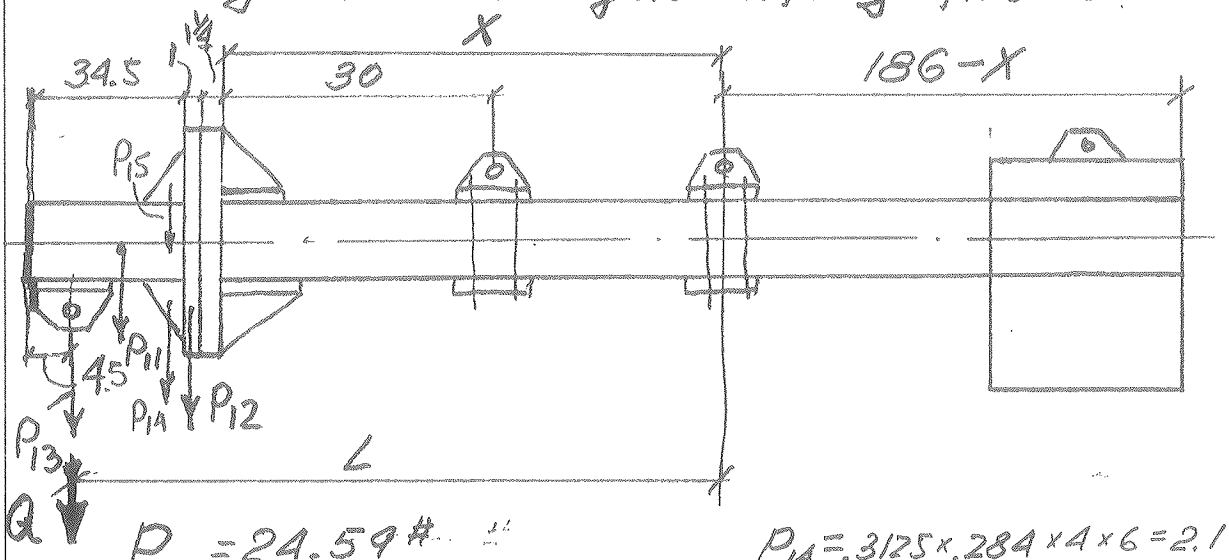

$P_{13} = 24.59^{\#}$

$P_{14} = .3125 \times .284 \times 4 \times 6 = 2.1^{\#}$

$P_{11} = 48.84 \times \frac{24.5}{12} = 99.7^{\#}$

$P_{15} = .3125 \times .284 \times 4 \times 4 = 1.42^{\#}$

$P_{12} = .284 \times 506.4 \times 1 = 143.8^{\#}$

$Q = 4000^{\#}$ (weight grid)

$M_L'' = M_R''$

$$M_1 = P_1 \times (X + 0.75) = 215.73X + 161.8$$

$$M_2 = P_2 \times (X - 2.6) = 4.54X - 11.8$$

$$M_3 = P_3 \times (X - 2) = 2.56X - 5.12$$

$$M_4 = P_4 \times (X - 3) = 10.65X - 31.95$$

$$M_5 = P_5 \times (X - 4) = 14.2X - 56.8$$

$$M_6 = P_6 \times \frac{X}{12} \times \frac{X}{2} = 2.04X^2$$

$$M_8 = P_8 \times (X - 34) = 25.67X - 872.8$$

$$M_{11} = P_{11} \times (X + 14.75) = 99.78 + 1470.6$$

$$M_{15} = 1.42x + 5.44$$

$$M_{12} = P_{12} \times (X + 2) = 143.8X + 287.6$$

$$M_{13} = 25.67\,(X + 22.5) = 25.67X + 577.6$$

$$M_Q = 4000 \times (X + 22.5) = 4000X + 90000$$

$$M_{14} = 2.1 \times (X + 3.83) = 2.1x + 8.16$$

$$\Sigma M_L'' = 2.04X^2 + 4546X + 91532.7$$

$$M_7 = 48.84 \times \frac{185.5 - X}{12} \cdot \frac{185.5 - X}{2} =$$

$$= 2.04X^2 - 756.84X + 70196.9$$

$$M_{10} = 11.47 \times (175 - X) = 2007.25 - 11.47X$$

$$M_B = 3162.56 \times (175 - X) = 553448 - 3162.56X$$

$$\Sigma M_R'' = 2.04X^2 - 3930.87X + 635652.16$$

$$\Sigma M_L'' = \Sigma M_R''$$

$$2.04X^2 + 4546X - 91532.7 = 2.04X^2 - 3930.87X + 635652.16$$

$$8476.87X = 544119.43$$

$$X = 64.188$$

$$L = 22.5 + 64.19 = 86.69'' < [98]$$

a)

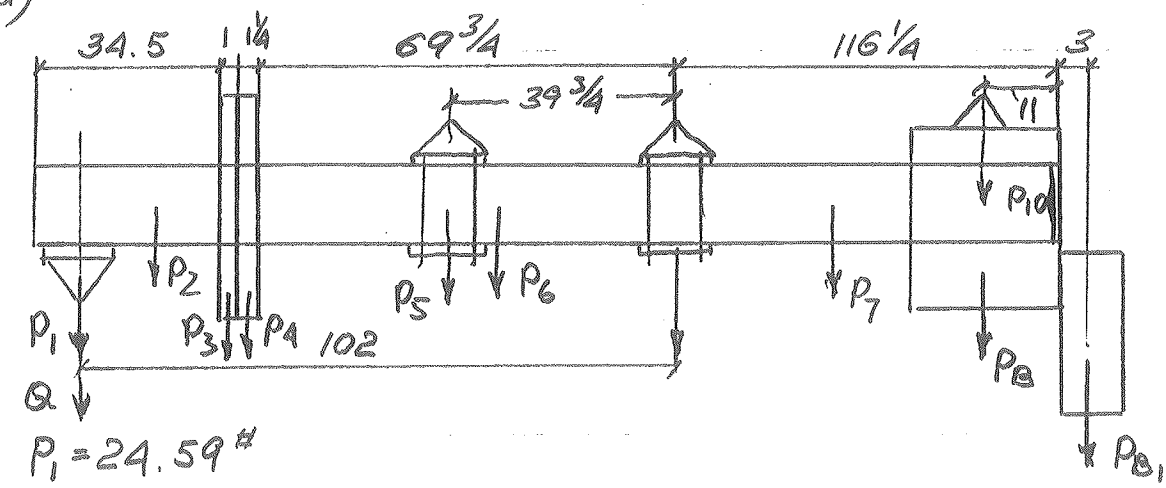

$P_1 = 24.59^{\#}$

$P_2 = 39.43 \cdot 34.5 : 12 = 113.36^{\#}$

$P_3 = 143.84^{\#}$

$P_4 = 179.8^{\#}$

$P_5 = 47^{\#}$

$P_6 = 39.43 \cdot 69.75 : 12 = 229.2^{\#}$

$P_7 = 39.43 \cdot 115.75 : 12 = 380.3^{\#}$

$P_{10} = 10.39^{\#}$

$M_1 = 24.59 \cdot 102 = 2508.2$ p·in

$M_2 = 113.36 \cdot 89.25 = 10117.38$ p·in

$M_3 = 143.84 \cdot 71.5 = 10284.56$ p·in

$M_4 = 179.8 \cdot 70.375 = 12653.43$ p·in

$M_5 = 47 \cdot 39.75 = 1868.25$ p·in

$M_6 = 229.2 \cdot 34.875 = 7993.35$ p·in

$M_7 = 380.3 \cdot 57.875 = 22009.86$ p·in

$M_B = (M_{10} + M_{PB}) = (3041 + 10.39) \cdot 105.25 = 321158.8$ p·in

$M_Q = 4000 \cdot 102 = 408000$ p·in

$M_{PB_1} = P_{B_1} \cdot 119.25.$

$\Sigma M_L'' = 453425.17$ p·in

$\Sigma M_R'' = 343168.7$ p·in

$$M_{P_{B_1}} = \Sigma M_L'' - \Sigma M_R'' = 110256.5$$

$$P_{B_1} = \frac{M_{P_{B_1}}}{119.25} = \frac{110256.5}{119.25} = 924.5^{\#}$$

Compute dimension for P_{B_1}

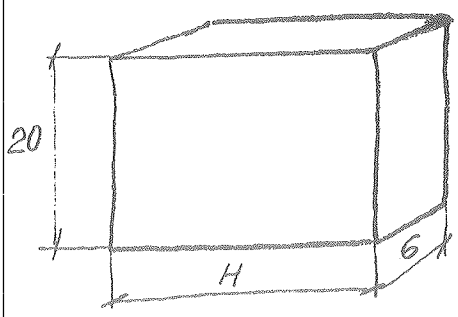

$P_{B_1} = 924.5^{\#}$

$$H = \frac{924.5}{.284 \cdot 6 \cdot 20} = 27.12$$

$H \approx 27'' = 2'-3''$

TOTAL WEGHT LIFTING FIXURE

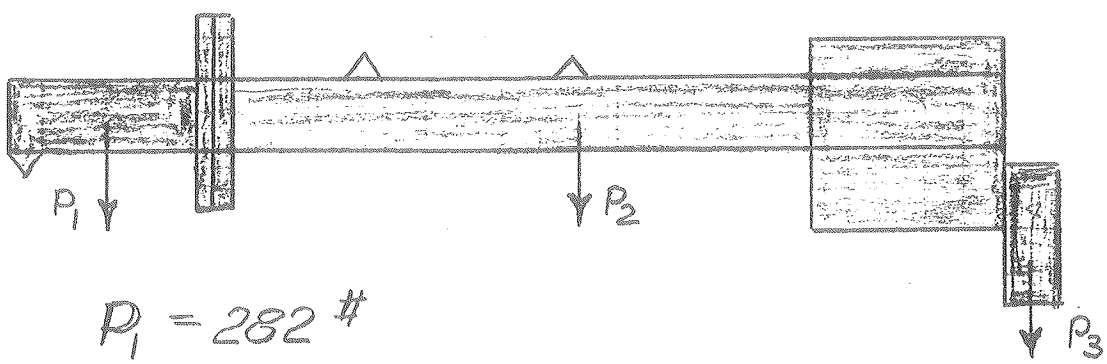

$P_1 = 282^{\#}$

$P_2 = 3970^{\#}$

$P_3 = 924^{\#}$

$P_{MODULE} = 9900^{\#}$

$P_{GRID} = 4000^{\#}$

$P_{FRAME} = 1000^{\#}$

$\Sigma P_1 = P_2 + P_M + P_F =$

$= 14870^{\#}$

$\Sigma P_2 = P_1 + P_2 + P_3 + P_G =$

$= 9176^{\#}$

5. Compute section module & check beam strength

$$M_{max} = \Sigma M_L = 483508.21 \text{ p-in}$$

Select a beam of $F_y = 36$ ksi steel subject to a max. bending moment of M_{max}

Compute required section

$$F_b = 0.6 \cdot F_y = 21.6 \text{ ksi}$$

$$S_x(\text{req'd}) = \frac{M_{max}}{F_b} = \frac{483.508}{21.6} = 22.38 \text{ in}^3$$

USE TS $12 \times 12 \times \frac{1}{4}$ $(S_x = 44.1 \text{ in}^3)$

The allowable stress is determined to be $F_b = \cancel{14.4}$ 12.0 ksi

$$f_b = \frac{483.508}{44.1} = 10.96 \text{ ksi} < \cancel{14.4}\ 12.0 \text{ ksi}$$

$$K = \frac{14.4}{10.96} = 1.3 \qquad \text{O.K.}$$

6. Compute end deflection using unit force method (module)

$$\Delta = \int \frac{M_1 M_{max} \cdot L}{EJ}$$

a)

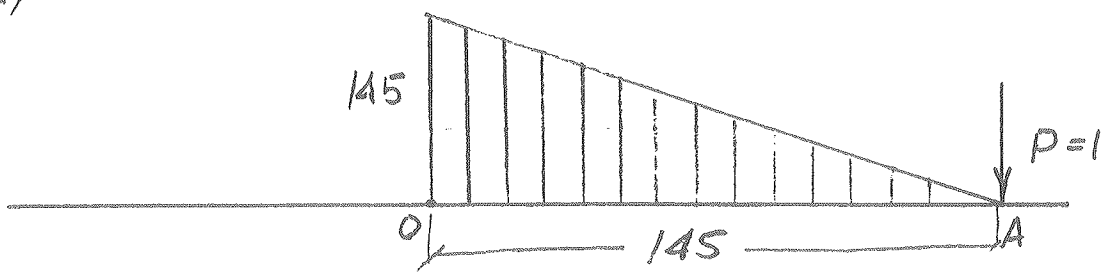

$$\Delta_A = \sum \int \frac{M_1 \cdot M_{P_B} \cdot L}{EJ}$$

$E = 29000 \cdot 10^3$ psi

$J_x = 265 \, in^4$ (TS 12×12)

$M_A = M_{P_B}$

$$\Delta_A = \frac{440869 \cdot 145 \cdot 145}{3 \cdot 29 \cdot 10^6 \cdot 265} = \underline{0.4 \, in}$$

$$\Delta_A = \underline{0.4} < [\Delta] = \frac{145}{240} = \underline{0.6}$$

O.K.

b)

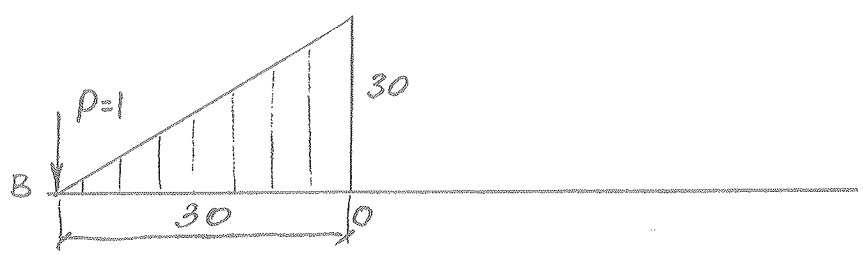

$M_B = M_{(Q+F)} = 11000 \cdot 30 =$

$= 330000$ p.in.

$$\Delta_B = \frac{330000 \cdot 30 \cdot 30}{3 \cdot 29 \cdot 10^6 \cdot 265} = 0.012 \, in$$

$$\Delta_B = 0.012 < [\Delta] = \frac{30}{240} = 0.125$$

O.K.

7. Compute section grid & check beam strength

$$\Sigma M_{max} = Q \cdot L = 4000 \cdot 102 = 408\,000 \text{ p}\cdot\text{in}$$

$$\Sigma M_{max(GRID)} < \Sigma M_{max(module)}$$

so TS 12×12×1/4 O.K. for GRID

8. Compute end deflection using unit force method (GRID)

a)

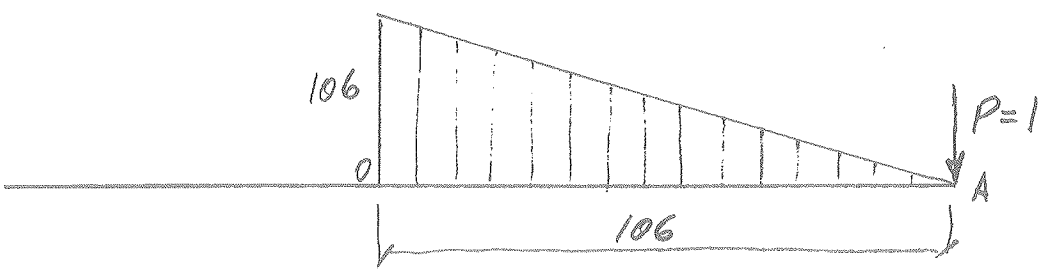

$$M_A = (3041 + 924) \cdot 106 = 420290$$

$$E = 29 \cdot 10^6 \text{ psi}$$

$$I = 265 \text{ in}^4$$

$$\Delta_A = \frac{\Sigma M_A \cdot M_1 \cdot L}{3EI} = \frac{420290 \cdot 106 \cdot 106}{3 \cdot 29 \cdot 10^6 \cdot 265} = 0.2$$

$$\Delta_A = 0.2 < [\Delta] = \frac{106}{240} = 0.44 \qquad \text{O.K.}$$

b)

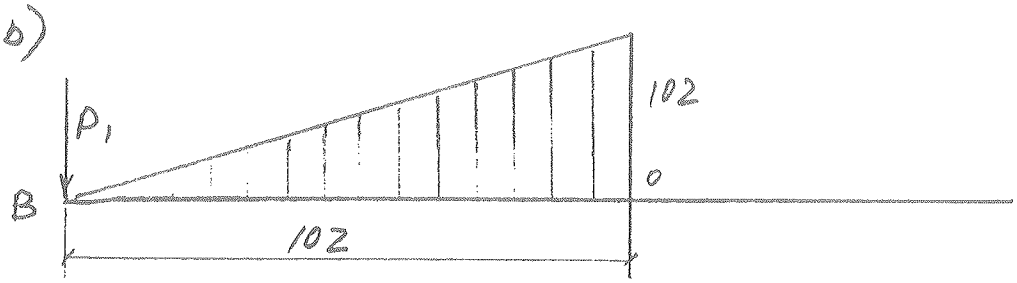

$$\Delta_B = \frac{\Sigma M_{max} \cdot M_1 \cdot L}{3EI} = \frac{408\,000 \cdot 102 \cdot 102}{3 \cdot 29 \cdot 10^6 \cdot 265} = 0.18$$

$$\Delta_B = 0.18 < [\Delta] = \frac{102}{240} = 0.425 \qquad \text{O.K}$$

10.

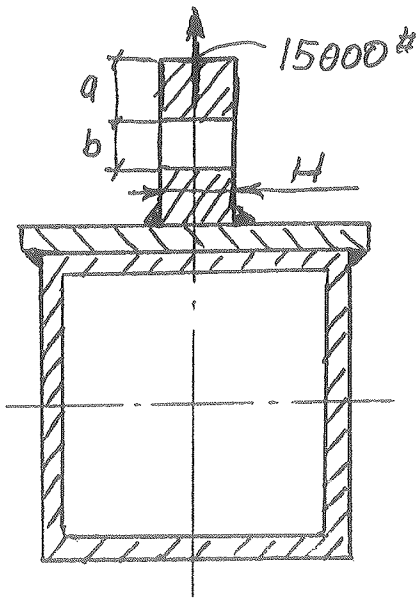

$Q = 15000^{\#}$

$H = 1.5^{\#}$

$a = 1.28^{\#}$

$b = 1.1875^{\#}$ DIA.

$F_y = 36$ KIPS

$$\frac{Q}{H \cdot a} \leq 0.4\, F_y$$

$$\frac{15.0}{1.5 \times 1.28} = \underline{7.81} < 0.4 \cdot 36 = \underline{14.4}$$

O.K.

HOLE $\phi\, 1\frac{3}{16}$ to USE

$1\frac{1}{8}$" BOLT TYPE ANCHOR SHACKLE

<u>G-2130</u>

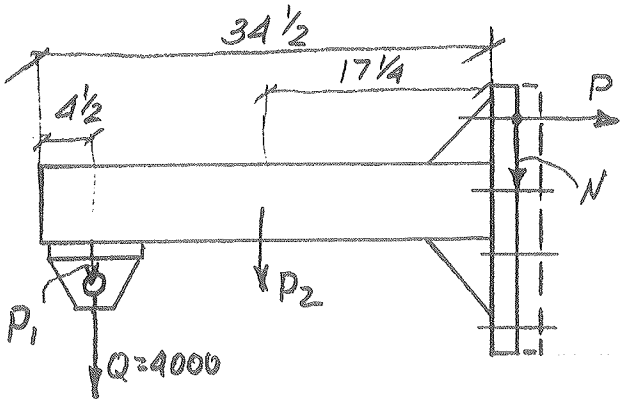

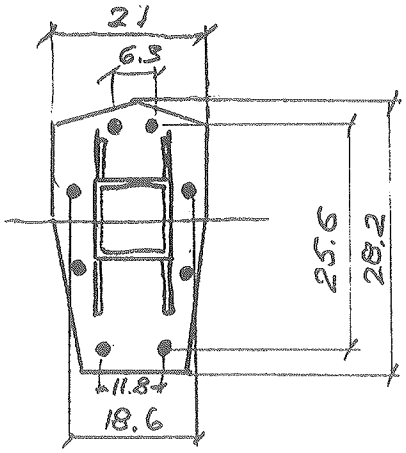

$P_1 = 25.67^{\#}$ $\qquad$ $n = 8$ BOLTS $3/4''\phi$

$P_2 = 113.36^{\#}$

$\Sigma P = 282^{\#} + 4000^{\#} = 4282^{\#}$

$\Sigma M = (4000 + 25.67) \cdot 30 = 120770$ p·in

$$N = \frac{\Sigma P}{n} = \frac{4282}{8} = 535.25 \text{ p.} = 0.535 \text{ kips}$$

$$P = \frac{\Sigma M}{H} = \frac{120770}{25.6} = 4717.6 = 4.718 \text{ kips}$$

$[N] = 7.7$ KIPS (BOLT $3/4''\phi$)

$[P] = 19.4$ KIPS (BOLT $3/4''\phi$)

$$\frac{N}{[N]} + \frac{P}{[P]} = \frac{0.535}{7.7} + \frac{4.718}{19.4} = 0.31 < 1$$

O. K.

Compute bolted connection (Module)

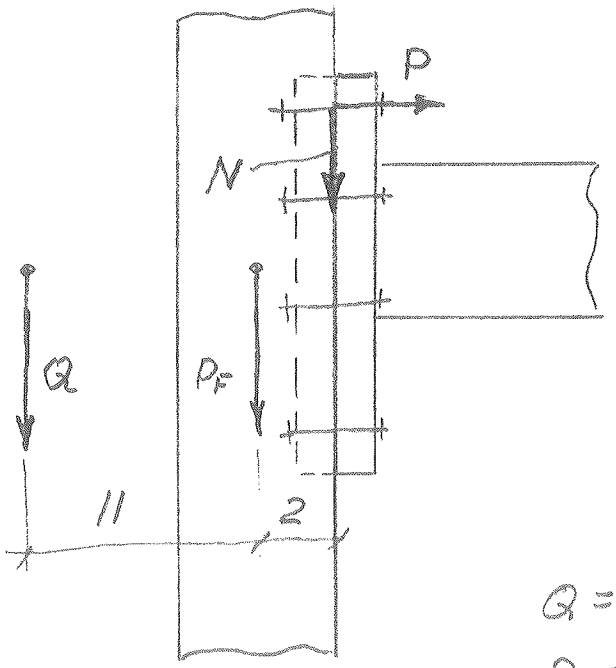

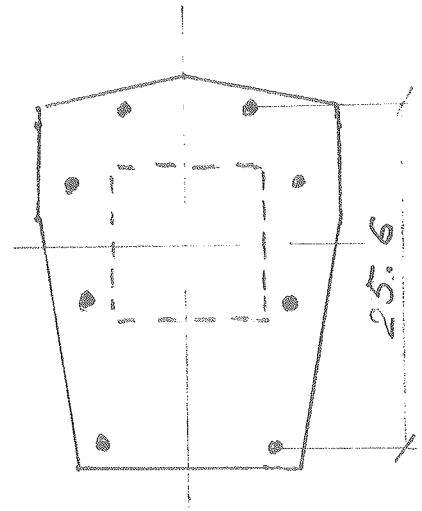

$Q = 10000^{\#}$ (module)

$P_F = 1000^{\#}$ (FRAME)

$n = 8$ bolts $3/4''\phi$

$\Sigma P = 11000\ p$

$\Sigma M = (10000 \cdot 13) + (1000 \cdot 2) = 132000\ pin$

$$N = \frac{\Sigma P}{n} = \frac{11000}{8} = 1375 = 1.375\ \text{kips}$$

$$P = \frac{\Sigma M}{H} = \frac{132000}{25.6} = 5156.25 = 5.156\ \text{kips}$$

$[N] = 7.7$ kips (bolts $3/4''\phi$)

$[P] = 19.4$ kips (bolts $3/4''\phi$)

$$\frac{N}{[N]} + \frac{P}{[P]} = \frac{1.375}{7.7} + \frac{5.156}{19.4} = 0.44 < 1$$

O. K