SPREADER BAR

I.D. Nº 31 COLOR OF BAR: YELLOW

LOAD CAPACITY PAINTED ON BAR 35000 ~~TONS~~. LBS

DATE CAP. & I.D. Nº PAINTED ON BAR 1-23-90

DATE OF LAST LOAD TEST. 12-6-89

OK R. Schen

TEST LOAD WEIGHT 25 TONS

TEST LOAD % 142.8 %

STRESS CALCULATIONS:

DONE BY JOHN GRIMSUN

DATE 1-8-90

REMARKS:

LIFTING DEVICE

DEVICE NAME: CDF 17.5 Ton Spreader Bar

ENGINEERING NOTE NUMBER: 31

APPLICABLE STANDARD: ANSI/ASME B30.20 - 1985

RATED LOAD: 17.5 Ton

TEST LOAD: 25 Ton

TEST LOAD PERCENT: 143%

LAST LOAD TEST DATE: 12/6/89

COLOR: Yellow

STRESS CALCULATIONS:

Done by: John Grimson

Date: 1/8/90

Reviewed by: Eric Larson

Date: 4/30/92

REMARKS:

The spreader bar was originally tested to be rated at 20 tons. Material tests were done on the steel, and the spreader bar was then rated at 17.5 tons because of the results of these tests.

IDENTIFICATION:

Engineering Note Number & Rated Load Must be Clearly Marked On a Conspicuous Surface.

Exhibit A-1

Below-the-Hook Lifting Device
Engineering Note

1/18/90 REVISED

Prepared By JOHN GRIMSON Date 11/29/89 Div/Sect RD/CDF
Reviewed By [illegible] Date 4/30/92 Div/Sect TS/Engineering
Div/Dept Head By R Kephart Date 5/1/92 Div/Sect RD/CDF

I. Identification and Verification of Compliance

Fill in the Fermilab Engineering Conformance Label Information below;
This below-the-hook lifting device conforms to Engineering Standard ????
Lifting Device Title CDF 17.5 TON SPREADER BAR
Lifting Device Drawing Number 2563.9-MD-262383
Rated Maximium Load 17.5 TONS
Designer/Manufacturer FNAL
Date Manufactured NOV 1989
Proof Test Load 25 TON Date 12/6/89
Director's signature (or designee) if lifting device requires an exception to the provisions of this standard. _____

II. Description of the Lifting Device

Laboratory location code CDF
Laboratory property number NONE
Is a testing procedure necessary for the safe proof testing of this lifting device? No
If yes, supply the written procedure with this Engineering Note.
Is an operating procedure necessary for safe operation of this lifting device? No
If yes, supply the written procedure with this Engineering Note.
Welding Information
Has the lifting device been fabricated in a Fermilab Shop? No (T&M IRONWORKERS)
If yes, append a copy of the welding shop statement of welder qualifications.

Amendment No.:	Reviewed By:	Date:

SUBJECT: 17.5 TON SPREADER BAR

NAME: JOHN GRIMSON

DATE: 1/8/90 | REVISION DATE

FROM REDUCED DWG NO 2563.9-MD-262383 (ATTACHED) SHOWING LOADS AND SECTIONS. ASSUME SECTION A-A & C-C TO BE

TWO(2) - 10"x4"x$\frac{1}{2}$" TUBES + ONE(1) - 10"x2" SOLID + TWO(2) - 9$\frac{1}{4}$"x$\frac{1}{4}$" CAPS

$I_{xx} = 2\, I_{TUBE} + I_{SOLID} + I_{CAPS}$

$I_{xx} = 2(136) + \frac{1}{12}(2)(10)^3 + \frac{1}{12}(9.25)(10.5^3 - 10^3)$

$I_{xx} = 272 + 166.67 + 121.50$

$I_{xx} = 560.17\ IN^4$ (NOTE: DOES NOT INC'L HANGING PLATES ABOVE OR BELOW CAPS)

$A = 2(12.4) + 20 + 2(9.25 \times 0.25) = 49.43\ IN^2$

SECTION B-B DOES NOT INCLUDE SOLIDS

$\therefore\ I_{xx} = 272 + 121.50$

$I_{xx} = 393.5\ IN^4$

$A = 2(12.4) + 2(9.25 \times .25) = 29.43\ IN^2$

MAT'L PROPERTIES

TUBE	SOLID	CAPS
ASTM A500 GR B	ASTM A 284 GRC	ASTM A36
$F_{Y_{TUBE}} = 46$ KSI	$F_{Y_{PL}} = 21$ KSI	$F_{Y_{CAP}} = 36$ KSI

MODULUS OF ELAST. 30×10^6 PSI

REV.	DESCRIPTION	DRAWN / APPD.	DATE / DATE

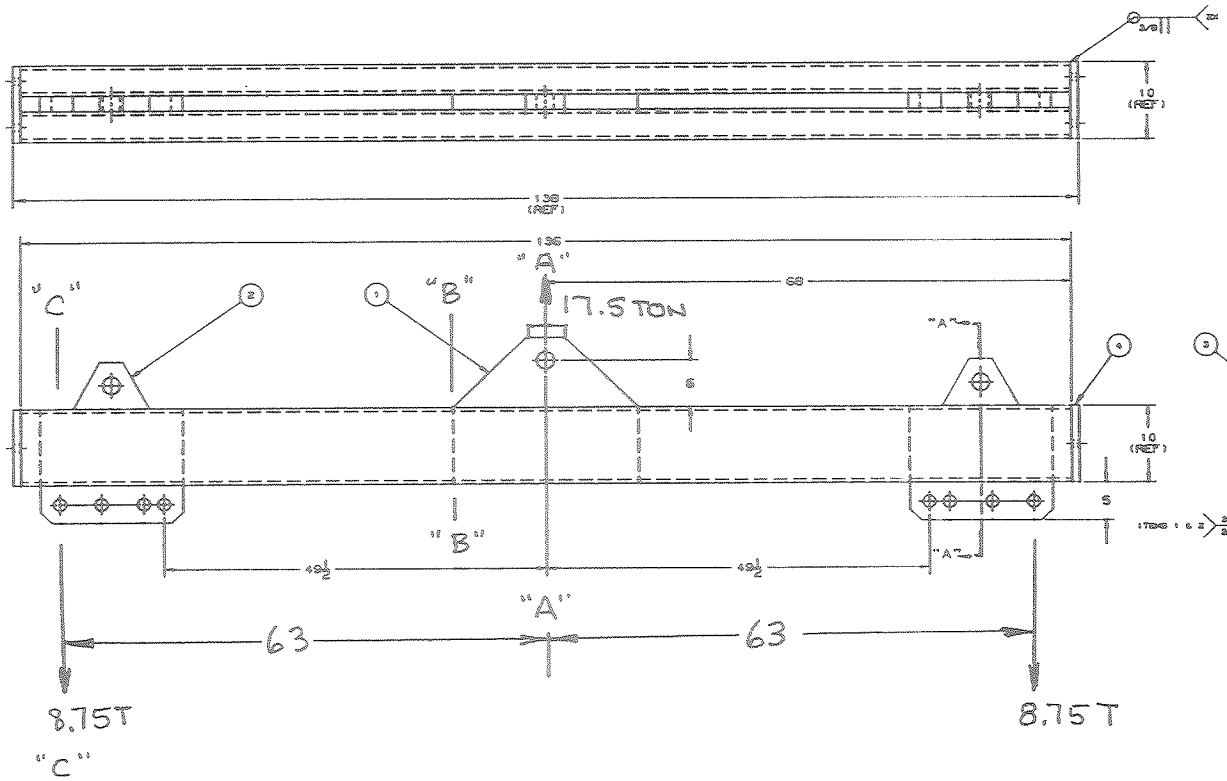

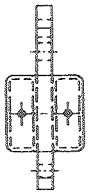

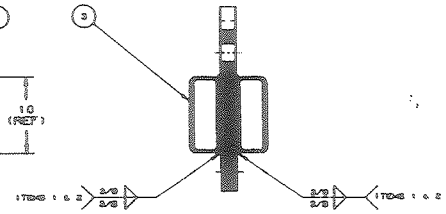

SECTION "A"
SCALE: 1/8"=1"

ITEM	PART NO.	DESCRIPTION OR SIZE	QTY.
4	MD-262384	END PLATE	2
3		10 x 4 x .50 WALL = 42.06 LBS/FT RECTANGULAR STEEL TUBING ASTM A 500	3
2	MD-262382	END HANDING PLATE	2
1	MD-262381	CENTER HANDING PLATE	1

PARTS LIST

UNLESS OTHERWISE SPECIFIED	ORIGINATOR	BOB SHOVAN	10/2/90
FRACTIONS / DECIMALS / ANGLES	DRAWN	CHUCK GRIMM	10/2/90
± 1/8 ± - ± -	CHECKED		
1. BREAK ALL SHARP EDGES 1/64 MAX.	APPROVED		
2. DO NOT SCALE DRAWING.	USED ON		
3. DIMENSIONS ARE VERY AND TO BE MET			
4. MAX. ALL MACH. SURFACES	MATERIAL	AS NOTED ABOVE	

FERMI NATIONAL ACCELERATOR LABORATORY
UNITED STATES DEPARTMENT OF ENERGY

COLLIDER DETECTOR FACILITY
17.5 TON SPREADER BAR
WELDMENT

SCALE	FINISH	DRAWING NUMBER	REV
1/8"=1"		2563.9-MD-262383	

CREATED WITH ICEMDEN VERSION 1.64 | FORM NO. 05741

ω

CHECK BEARING & TEAR OUT OF 3 1/2" DIA. HOLE OF CENTER HANGING PLATE AND THE SAME FOR 2 1/2" & 1 5/8" DIA HOLES OF END HANGING PLATES

CENTER

BEARING STRESS = $\frac{35,000}{2 \times 3.5}$ = 5,000 PSI

TEAR OUT STRESS = $\frac{35,000}{2 \times 2 \times 3}$ = 2,917 PSI

(DOES NOT INCL 1X2X6 BAR ON TOP)

END HANGING PLATES

UPPER HOLES

BEARING STRESS = $\frac{17,500}{2 \times 2.5}$ = 3,500 PSI

TEAR OUT STRESS = $\frac{17,500}{2 \times 2 \times 3}$ = 1,458 PSI

LOWER HOLES

BEARING STRESS = $\frac{17,500}{2 \times 1.625}$ = 5,385 PSI

TEAR OUT STRESS = $\frac{17,500}{2 \times 2 \times 2.5}$ = 1,750 PSI

SUBJECT: 17.5 TON SPREADER BAR

NAME: J. GRIMSON

DATE: 1-8-90 | REVISION DATE:

USING MSC/CASE VERSION 2.1 TWO METHODS WERE USED:

1ST SIMPLE SUPPORT BEAM USING A CONSTANT "I" OF 394 (SECTION B-B)

THIS GIVES THE SHEAR, MOMENT & DEFLECTION DIAGRAMS PLUS MAX. VALUES FOR ALL THREE

2ND GENERAL TWO-DIMENSIONAL FRAMES
THIS ALLOWS A VARIATION IN "I" AND GIVES A BETTER SOLUTION FOR DEFLECTION.

SUMMARY

1- MOMENT MAX 1.10×10^6 IN-lb
VERT SHEAR MAX 1.75×10^4 lb
DEFLECTION YMAX = 0.123 IN

2- DEFLECTION YMAX = 0.106 IN

MOMENT & SHEAR SAME AS 1

ALSO MOMENT AT SECTION B-B (MINIMUM I)
$= 0.892 \times 10^6$ IN-lbs

Module B-1: Single Span Beams Under Transverse and Axial Loads

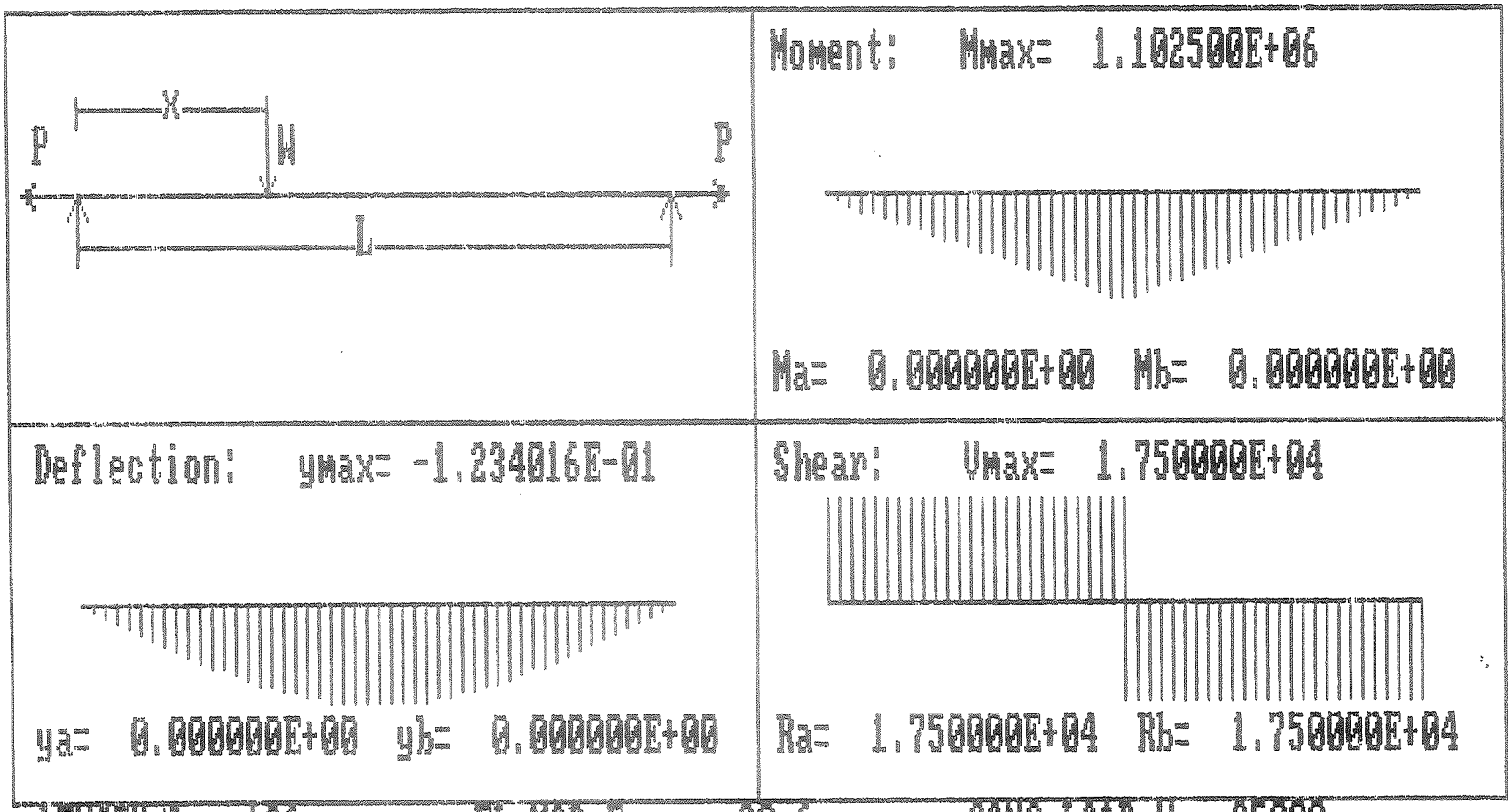

LENGTH L = 126 EL MOD,E = 30e6 CONC LOAD,W = 35000
LENGTH x = 63 M OF INER,I = 394 AXIAL LOAD,P= 0

ENTER F7 FOR BOUNDARY CONDITION MENU

F2PRINT F3DISP F7MENU F8REDO F9SAVE F10TOP

MSC/CASE Version 2.1
Module C-5 v1.8: General Two-Dimensional Frames
Developed by DVSE Inc. in cooperation with MSC
Copyright (C) 1985 (All Rights Reserved)

..... INPUT VARIABLES .....

JOINT	X-COORD	Y-COORD	BOUNDARY TYPE	FORCE-X	FORCE-Y	MOMENT-Z
1	-6.3000E+01	0.0000E+00	3	0.0000E+00	1.7500E+04	0.0000E+00
2	-4.7000E+01	0.0000E+00	0	0.0000E+00	0.0000E+00	0.0000E+00
3	-1.2000E+01	0.0000E+00	0	0.0000E+00	0.0000E+00	0.0000E+00
4	0.0000E+00	0.0000E+00	0	0.0000E+00	-3.5000E+04	0.0000E+00
5	1.2000E+01	0.0000E+00	0	0.0000E+00	0.0000E+00	0.0000E+00
6	4.7000E+01	0.0000E+00	0	0.0000E+00	0.0000E+00	0.0000E+00
7	6.3000E+01	0.0000E+00	1	0.0000E+00	1.7500E+04	0.0000E+00

MEMBER	JOINT-1	JOINT-2	AREA	MOM OF INER.I	MOD OF ELAS.E
1	1	2	4.9430E+01	5.6000E+02	3.0000E+07
2	2	3	2.9430E+01	3.9400E+02	3.0000E+07
3	3	4	4.9430E+01	5.6000E+02	3.0000E+07
4	4	5	4.9430E+01	5.6000E+02	3.0000E+07
5	5	6	2.9430E+01	3.9400E+02	3.0000E+07
6	6	7	4.9430E+01	5.6000E+02	3.0000E+07

..... RESULTS .....

MAXIMUM DEFLECTION Xmax = 0.0000E+00 JOINT = 1
Ymax = -1.0563E-01 JOINT = 4
MAXIMUM BENDING MOMENT = -1.1025E+06 MEMBER = 3 JOINT = 4
MAXIMUM AXIAL FORCE = 0.0000E+00 MEMBER = 1

JOINT	X-DEFLECTION	Y-DEFLECTION	Z-ROTATION
1	0.0000E+00	0.0000E+00	-2.5817E-03
2	0.0000E+00	-4.0596E-02	-2.4484E-03
3	0.0000E+00	-1.0120E-01	-7.1248E-04
4	0.0000E+00	-1.0563E-01	6.4838E-07
5	0.0000E+00	-1.0120E-01	7.1249E-04
6	0.0000E+00	-4.0596E-02	2.4484E-03
7	0.0000E+00	0.0000E+00	2.5817E-03

MEMBER	AXIAL FORCE	MOMENT JOINT-1	MOMENT JOINT-2
1	0.0000E+00	5.0000E-01	-2.8000E+05
2	0.0000E+00	2.7999E+05	-9.9248E+05
3	0.0000E+00	9.9248E+05	-1.1025E+06
4	0.0000E+00	1.1025E+06	-9.9247E+05
5	0.0000E+00	9.9247E+05	-2.7999E+05
6	0.0000E+00	2.7999E+05	0.0000E+00

Module C-5: General Two-Dimensional Frames

** R E S U L T S **

Deflections:
Xmax = 0 Joint = 1
Ymax =-.1056255 Joint = 4

Bending Moment:
Mmax =-1102480
Member= 3 Joint = 4

Axial Force:
Amax = 0
Member= 1

DEFLECTION

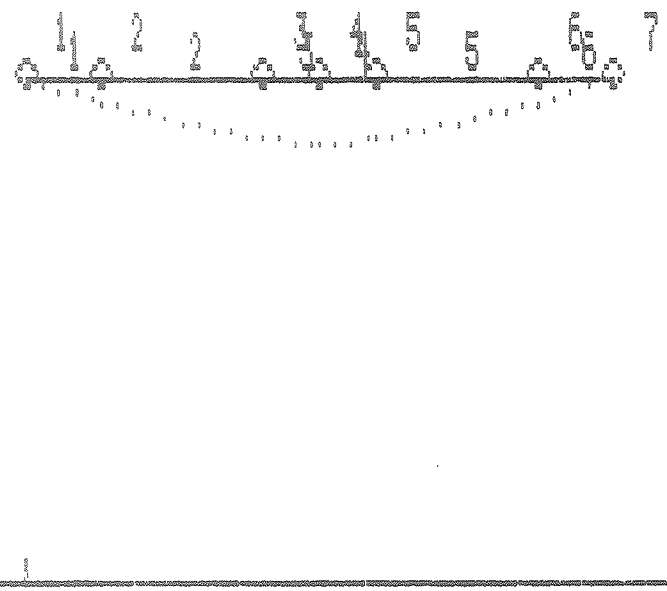

ENTER F6 FOR MOMENT DIAGRAM OR
F7 FOR LOAD SELECTION MENU

F2PRINT F3DISP F6NEXT F7MENU F8REDO F9SAVE F10TOP

** R E S U L T S **

Deflections:
Xmax = 0 Joint = 1
Ymax =-.1056255 Joint = 4

Bending Moment:
Mmax =-1102480
Member= 3 Joint = 4

Axial Force:
Amax = 0
Member= 1

BENDING MOMENT

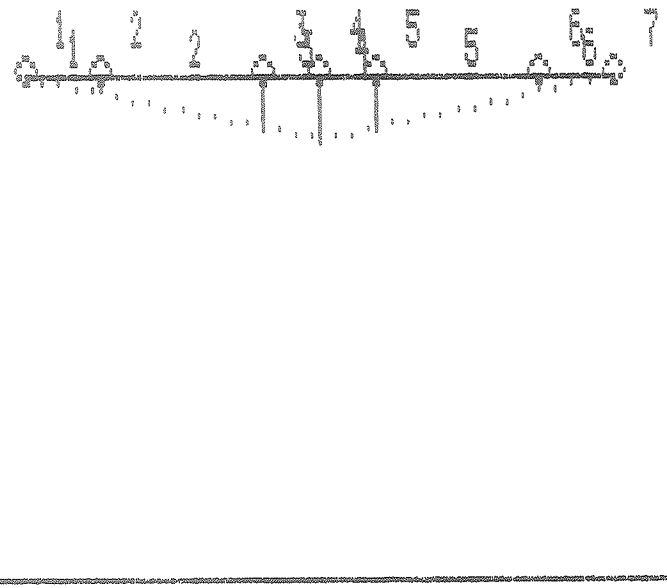

ENTER F5 FOR DEFLECTION DIAGRAM OR
F7 FOR LOAD SELECTION MENU

F2PRINT F3DISP F5PREV F7MENU F8REDO F9SAVE F10TOP

SUBJECT: 17.5 TON SPREADER BAR

NAME: J. GRIMSON

DATE: 1/8/90 | REVISION DATE

CHECK BENDING STRESS AT SECTIONS A-A & B-B

$$\sigma_{AA} = \frac{1.10 \times 10^6 (5.25)}{560} = 10.31 \text{ KSI}$$

$$\sigma_{BB} = \frac{0.892 \times 10^6 (5.25)}{394} = 11.89 \text{ KSI}$$

MAX ALLOWABLE 12 KSI

CHECK WELD STRESS CENTER HANGING PLATE

LENGTH OF WELD = 4 × 24 = 96"

AREA @ THROAT = 96 × 0.707 × 0.375 = 25.45 IN²

$$\therefore \text{STRESS} = \frac{35{,}000}{25.45} = 1{,}375 \text{ PSI}$$

FERMILAB
ENGINEERING NOTE

SUBJECT: 20 TON SPREADER BAR

NAME: J. GRIMSON / M. NURCZYK
DATE: 12/27/89

SERIAL-CATEGORY | PAGE | PROJECT | SECTION | REVISION DATE

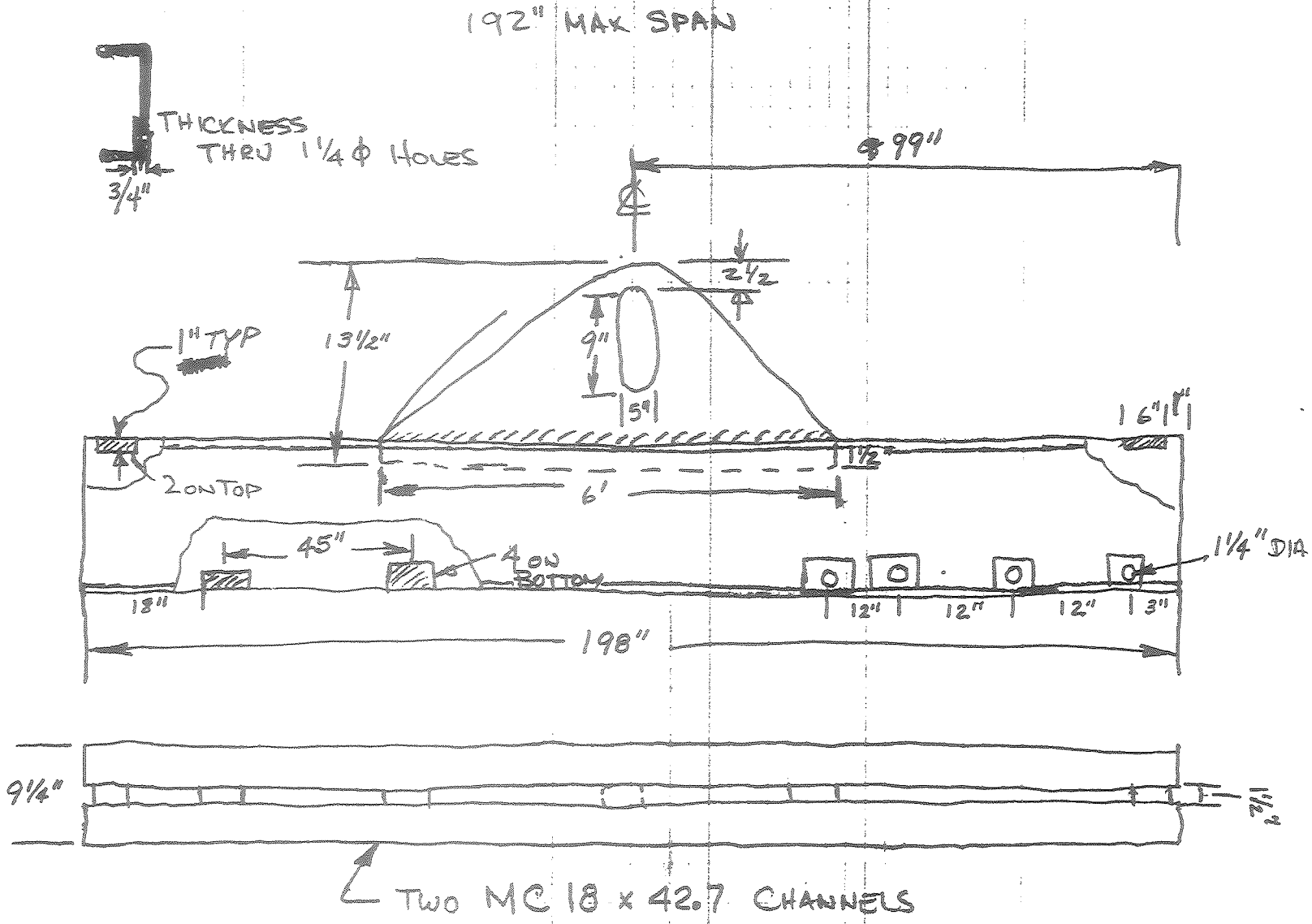

FERMILAB
ENGINEERING NOTE

SECTION	PROJECT	SERIAL-CATEGORY	PAGE

SUBJECT

NAME

DATE

REVISION DATE

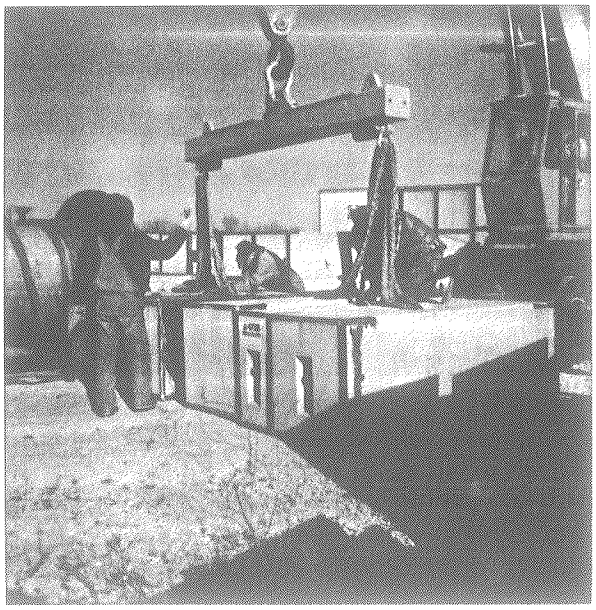

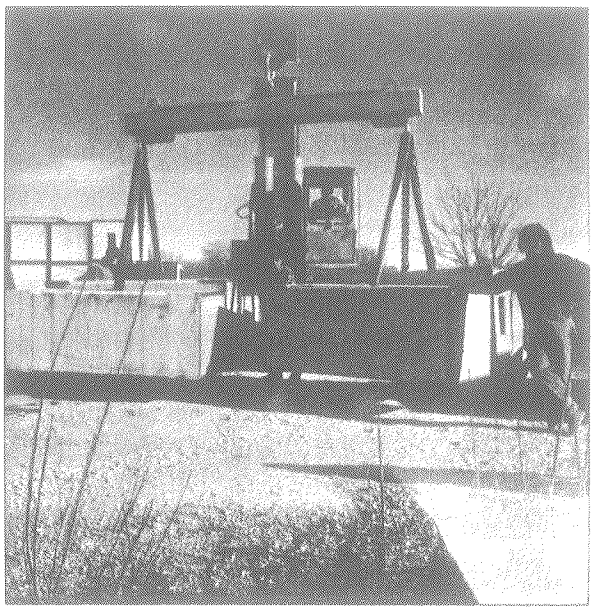

SPREADER BAR Nº 31 PAINT COLOR YELLOW

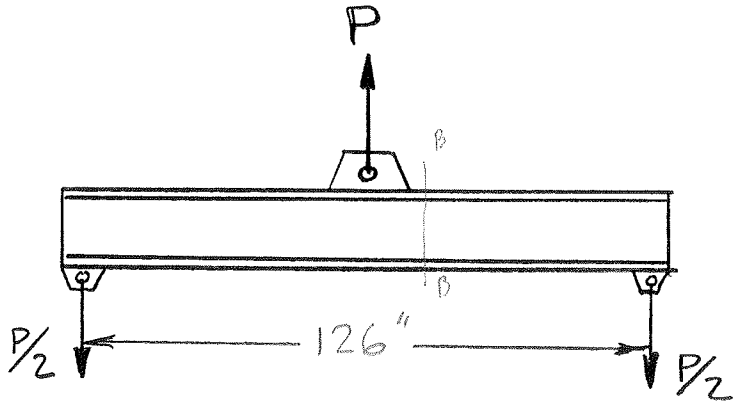

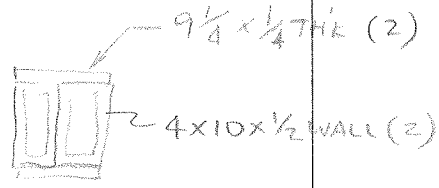

BEAM SIZE _____

$d = 10.5$

$L = 126''$

$d/A_f = 1.663$

$S_x = 74.952$

$t_w = 2.000$

$A_w = d \cdot t_w = 21$

$M_{BB} = \frac{PL}{4} = 31.5\,P \times \frac{(63-12)}{63} = 25.5\,P$

$V = \frac{P}{2}$

BENDING STRESS:

$F_{b\ ALLOW} = 12{,}000$ psi

OR $F_{b\ ALLOW} = \frac{12 \times 10^6}{L \cdot d/A_f} = \frac{12 \times 10^6}{126 \times 1.663} = 57{,}269$ psi

} USE THE LEAST

$\therefore f_{b\ MAX} = \frac{M}{S_x} = 12{,}000 = \frac{25.5P}{74.952}$ $P = 35271$ LBS $= 17.6$ TONS

SHEAR STRESS:

$F_{V\ ALLOW} = \frac{.4\,F_y}{3} = 4800$ psi

$\therefore f_{V\ MAX} = \frac{V}{A_w} = 4800 = \frac{P}{2 \times 21}$ $P = 100.8$ TONS

SUMMARY: $\therefore P = 17.6$ TONS

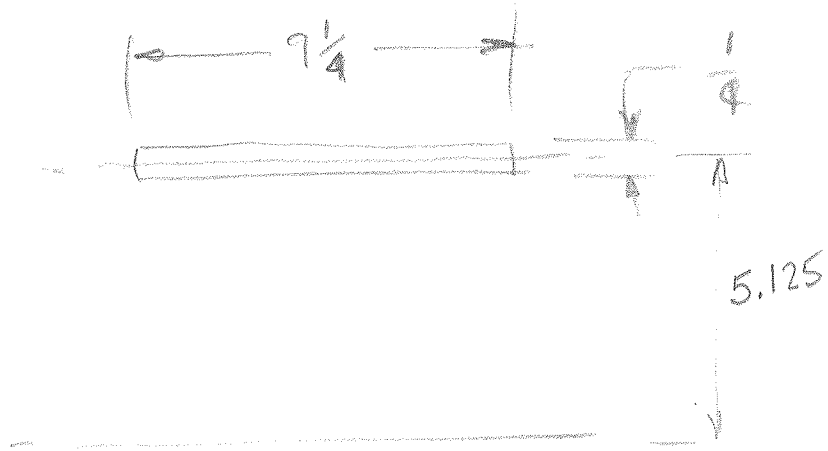

$I = \frac{bh^3}{12} = .012 \text{ IN}^4$

$A = 9.25 \times .25$
$= 2.3125$

$I_{TOTAL} = I + Ad^2 = .012 + 2.3125 \times 5.125^2$
$= 60.751$

2 BARS = 121.5025 IN^4

2 TUBES = ~~125~~ 136 × 2 = ~~250~~ 272 IN^4

TOTAL I = ~~371.5~~ 393.5 IN^4

$S = \frac{I}{c} = \frac{\cancel{371.5}\ 393.5}{5.25} = \cancel{70.762}\ 74.952 = 74.952$

$d/A_s = \frac{10.5}{.25(9.25) + 8 \times .5} = \frac{10.5}{6.3125} = 1.663$

REV.	DESCRIPTION	DRAWN / APPD.	DATE / DATE
A	3 1/2 WAS 2 1/4 MATERIAL WAS H.R.S.	S.L.M.	11-30-89
B	WAS RATED FOR 20 TONS LIFTING	S.L.M.	1-9-90

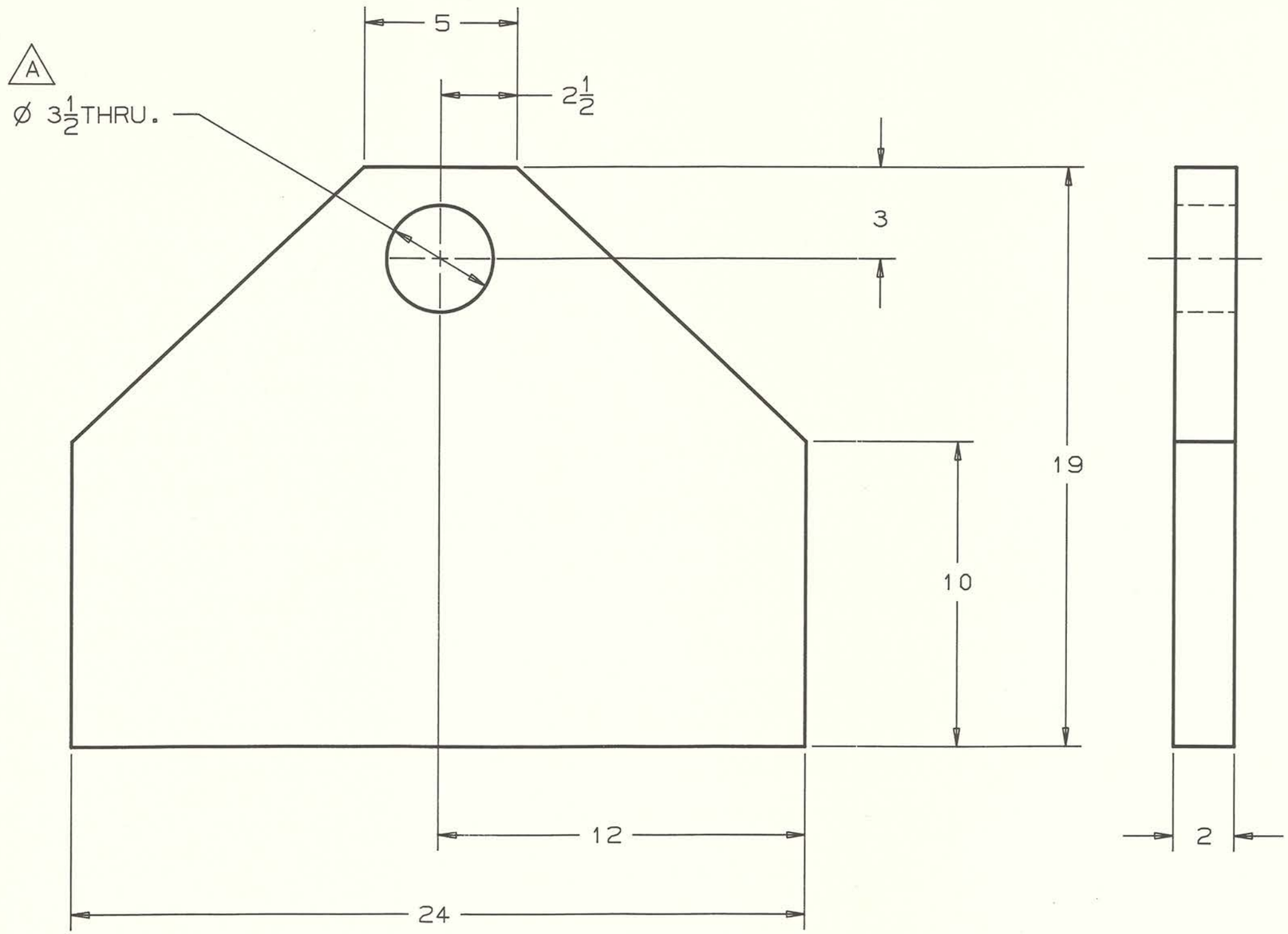

1 REQ'D

ITEM	PART NO.	DESCRIPTION OR SIZE	QTY.

PARTS LIST

UNLESS OTHERWISE SPECIFIED			ORIGINATOR	BOB SHOVAN	10/9/88
FRACTIONS	DECIMALS	ANGLES	DRAWN	CHUCK GRIMM	10/9/88
± 1/32	± –	± –	CHECKED		
			APPROVED		

1. BREAK ALL SHARP EDGES 1/64 MAX.
2. DO NOT SCALE DRAWING.
3. DIMENSIONS BASED UPON ANSI Y14.5M-1982
4. MAX. ALL MACH. SURFACES √

USED ON 2563.9-MD-262383

MATERIAL ASTM A284 GRADE C STEEL PLATE

FERMI NATIONAL ACCELERATOR LABORATORY
UNITED STATES DEPARTMENT OF ENERGY

COLLIDER DETECTOR FACILITY
17.5 TON SPREADER BAR
CENTER HANGING PLATE

SCALE	FILMED	DRAWING NUMBER	REV.
1/4"=1"		2563.9-MB-262381	B

CREATED WITH ICEMDDN VERSION 1.64 | USER NO. 95741

10/01/09 17.50.07 93642 INCHES 0 1 2 3 4 5 6 METRIC 0 10 20 30 40 50 60 70 80 90 100 110 120 130 140 150

REV.	DESCRIPTION	DRAWN / APPD.	DATE / DATE
A	WAS RATED FOR 20 TONS LIFTING	S.L.M.	1-9-90

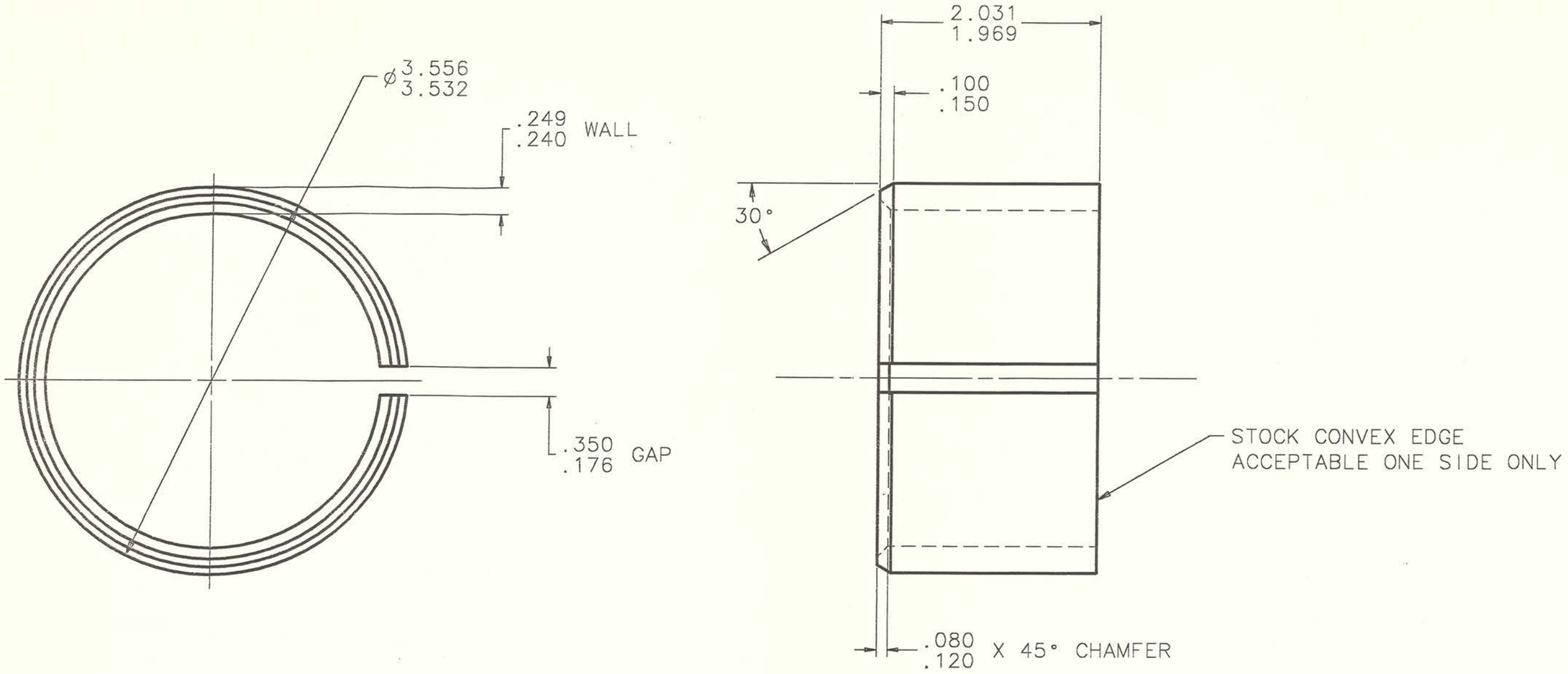

ITEM	PART NO.	DESCRIPTION OR SIZE	QTY.
		PARTS LIST	

UNLESS OTHERWISE SPECIFIED			ORIGINATOR	JOHN GRIMSON	12-5-89
.XX	.XXX	ANGLES	DRAWN	S.L. MEREDITH	12-5-89
±——	±——	± 5°	CHECKED		
			APPROVED		

1. BREAK ALL SHARP EDGES 1/64 MAX.
2. DO NOT SCALE DRAWING.
3. DIMENSIONS BASED UPON ANSI Y14.5M-1982
4. MAX. ALL MACH. SURFACES 250√

USED ON 2563.9-MD-262383

MATERIAL AISI-1074 ROCKWELL "C" 46-52 THRU.

FERMI NATIONAL ACCELERATOR LABORATORY
UNITED STATES DEPARTMENT OF ENERGY

COLLIDER DETECTOR 17.5 TON SPEADER BAR SLIT RING

SCALE	FILMED	DRAWING NUMBER	REV.
1:1		2563.9-MB-262533	A

CREATED WITH I-DEAS 4.1 | USER NAME: SIMMIELEE

INCHES 0 1 2 3 4 5 6 METRIC 0 10 20 30 40 50 60 70 80 90 100 110 120 130 140 150

REV.	DESCRIPTION	DRAWN / APPD.	DATE / DATE
A	2 1/2 WAS 2 1/4 & 1 3/4 WAS 1 5/8 MATERIAL WAS H.R.S.	S.L.M.	11-30-89
B	WAS RATED FOR 20 TONS LIFTING	S.L.M.	1-9-90

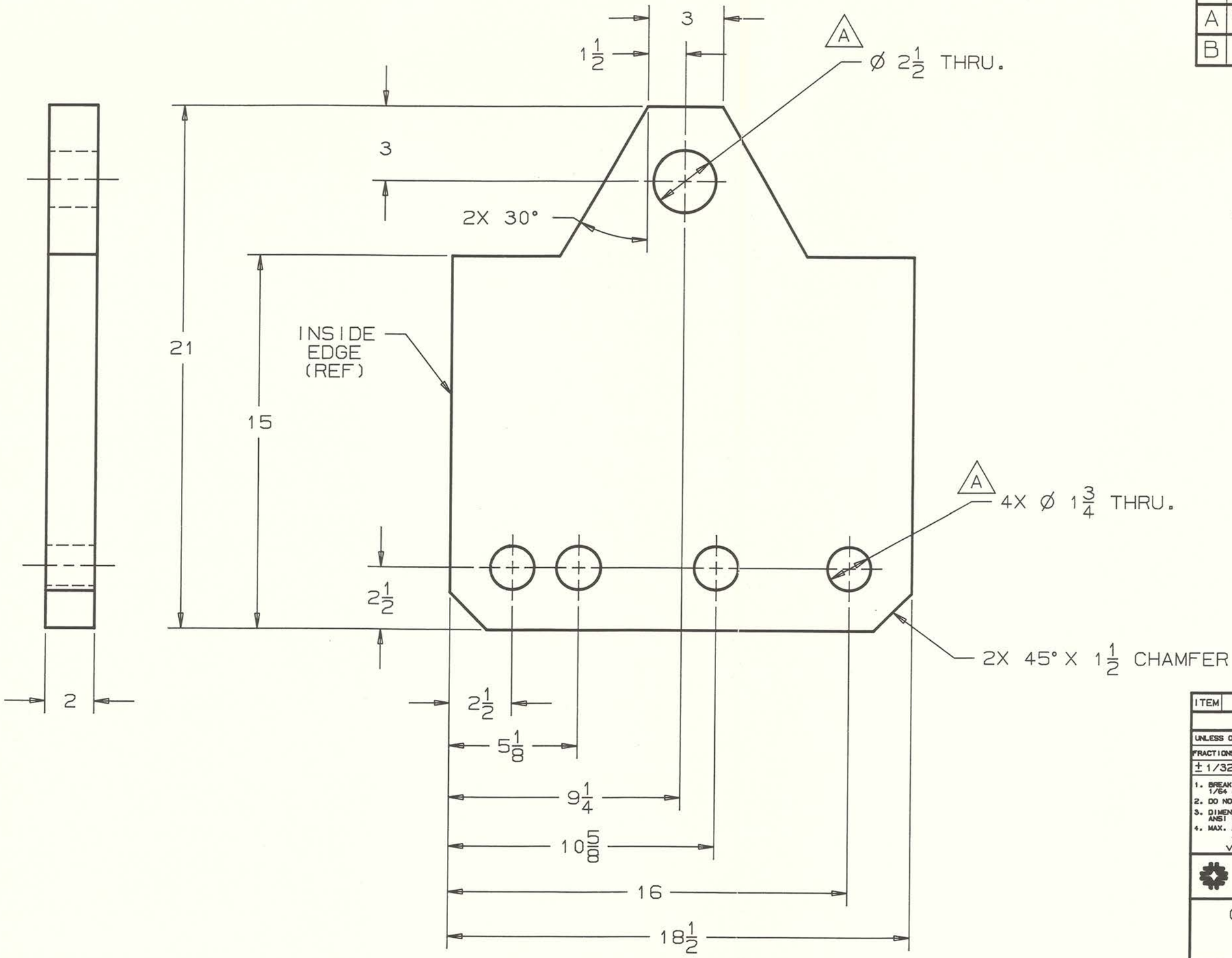

2 REQ'D

ITEM	PART NO.	DESCRIPTION OR SIZE	QTY.
PARTS LIST			

UNLESS OTHERWISE SPECIFIED				
FRACTIONS	DECIMALS	ANGLES	ORIGINATOR	BOB SHOVAN 10/9/88
± 1/32	± -	± 2°	DRAWN	CHUCK GRIMM 10/9/88
			CHECKED	
			APPROVED	
			USED ON	2563.9-MD-262383
			MATERIAL	ASTM A284 GRADE C STEEL PLATE

1. BREAK ALL SHARP EDGES 1/64 MAX.
2. DO NOT SCALE DRAWING.
3. DIMENSIONS BASED UPON ANSI Y14.5M-1982
4. MAX. ALL MACH. SURFACES √

FERMI NATIONAL ACCELERATOR LABORATORY
UNITED STATES DEPARTMENT OF ENERGY

COLLIDER DETECTOR FACILITY
17.5 TON SPREADER BAR
END HANGING PLATE

SCALE	FILMED	DRAWING NUMBER	REV.
1/4"=1"		2563.9-MB-262382	B

CREATED WITH ICEMDDN VERSION 1.64 | USER NO. 95741

10/01/09 18.02.32 93642 INCHES 0 1 2 3 4 5 6 METRIC 0 10 20 30 40 50 60 70 80 90 100 110 120 130 140 150

REV.	DESCRIPTION	DRAWN / APPD.	DATE / DATE
A	WAS RATED FOR 20 TONS LIFTING	S.L.M.	1-12-90

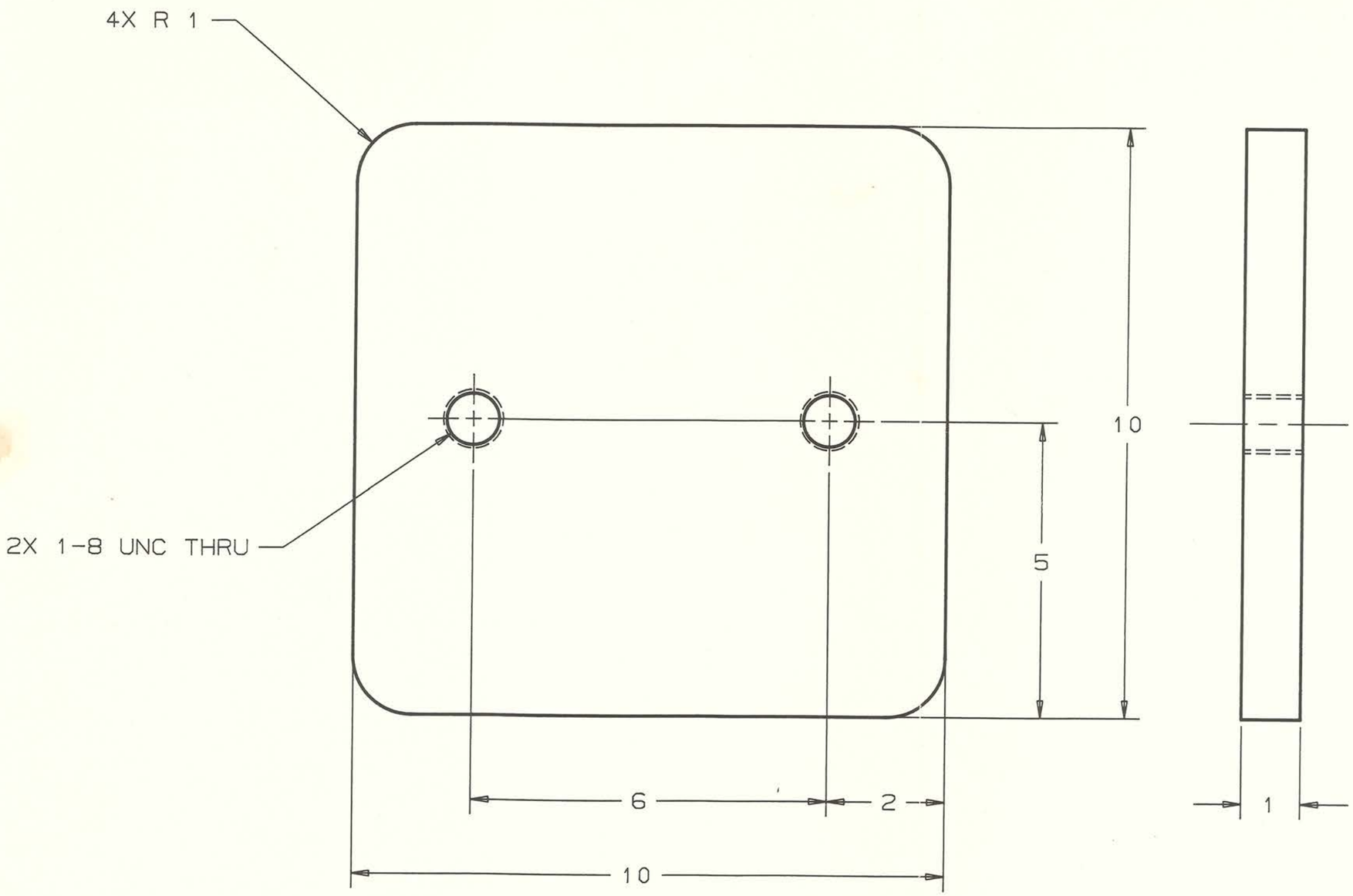

ITEM	PART NO.	DESCRIPTION OR SIZE	QTY.

PARTS LIST

UNLESS OTHERWISE SPECIFIED			ORIGINATOR	BOB SHOVAN	10/9/88
FRACTIONS	DECIMALS	ANGLES	DRAWN	CHUCK GRIMM	10/9/88
± 1/32	± –	± –	CHECKED		
1. BREAK ALL SHARP EDGES 1/64 MAX.			APPROVED		
2. DO NOT SCALE DRAWING.			USED ON	2563.9-MD-262383	
3. DIMENSIONS BASED UPON ANSI Y14.5M-1982					
4. MAX. ALL MACH. SURFACES √			MATERIAL	H.R.S	

FERMI NATIONAL ACCELERATOR LABORATORY
UNITED STATES DEPARTMENT OF ENERGY

COLLIDER DETECTOR FACILITY
17.5 TON SPREADER BAR
END PLATE

SCALE	FILMED	DRAWING NUMBER	REV.
HALF		2563.9-MB-262384	A

CREATED WITH ICEMDDN VERSION 1.64 | USER NO. 95741

0/01/12 10.15.02 93642 INCHES 0 1 2 3 4 5 6 METRIC 0 10 20 30 40 50 60 70 80 90 100 110 120 130 140 150

REV.	DESCRIPTION	DRAWN / APPD.	DATE / DATE
A	ADDED ITEMS NO. 5, 6, 7 & 8	S.L.M.	11-30-89
B	ADDED PART NO. FOR ITEM NO. 8 & REVISIED ITEM NO. 8 DESCRIPTION	S.L.M.	12-5-89
C	WAS RATED 20 TONS LIFTING	S.L.M.	1-9-90

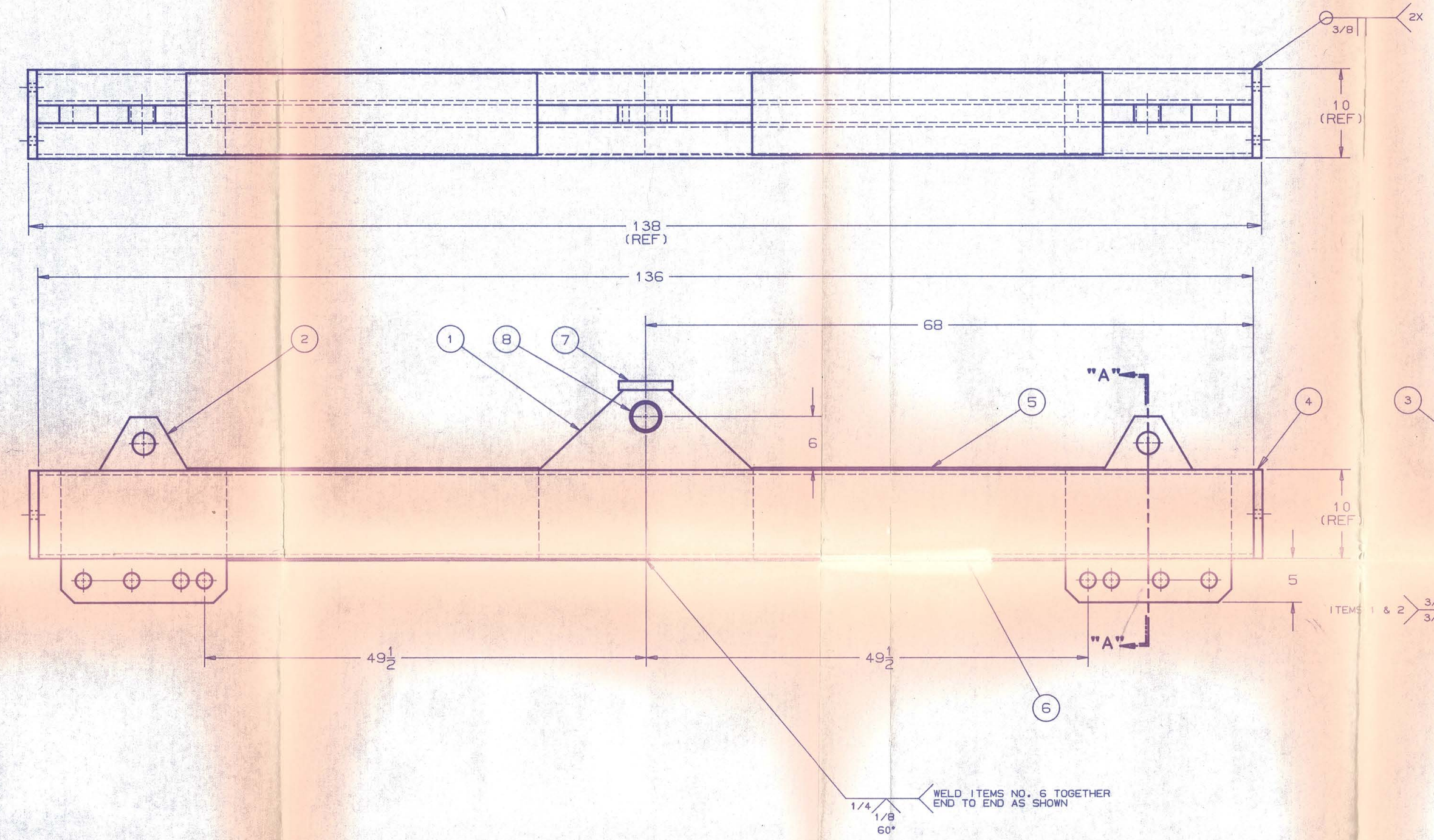

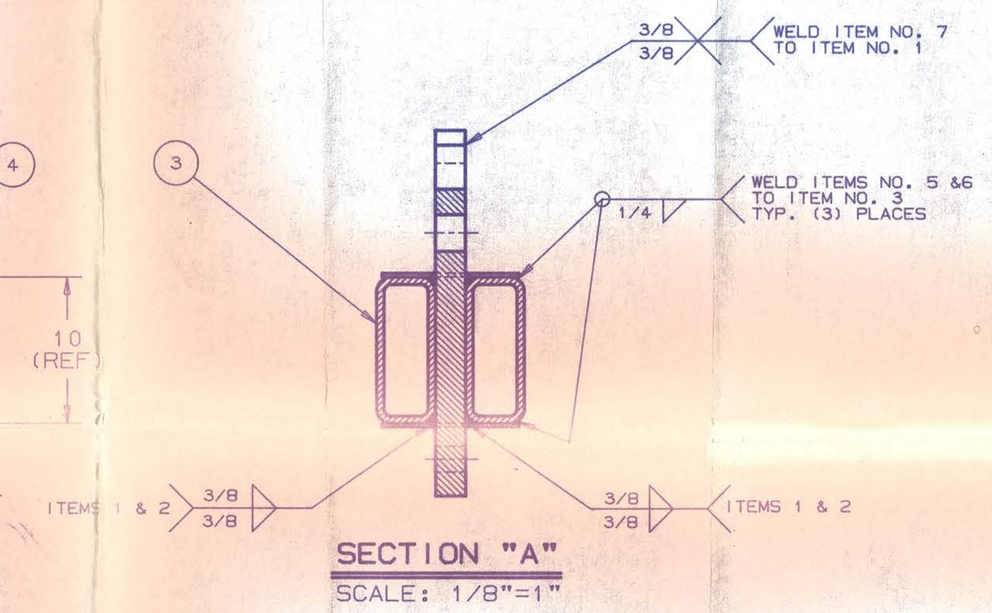

SECTION "A"
SCALE: 1/8"=1"

ITEM	PART NO.	DESCRIPTION OR SIZE	QTY.
8	MB-262533	SLIT RING	1
7		1 THK. X 2 WIDE X 6 LG. ASTM A36 STEEL PLATE	1
6		1/4 THK. X 9 1/4 WIDE X 47 LG. ASTM A36 STEEL PLATE	2
5		1/4 THK. X 9 1/4 WIDE X 39 1/4 LG. ASTM A36 STEEL PLATE	2
4	MB-262384	END PLATE	2
3		10 x 4 x .50 WALL x 42.05 LBS/FT RECTANGULAR STEEL TUBING ASTM A 500 GRADE B	2
2	MB-262382	END HANGING PLATE	2
1	MB-262381	CENTER HANGING PLATE	1

PARTS LIST

UNLESS OTHERWISE SPECIFIED			ORIGINATOR	BOB SHOVAN	10/9/88
FRACTIONS	DECIMALS	ANGLES	DRAWN	CHUCK GRIMM	10/9/88
± 1/8	± –	± –	CHECKED		
1. BREAK ALL SHARP EDGES 1/64 MAX.			APPROVED		
2. DO NOT SCALE DRAWING. 3. DIMENSIONS BASED UPON ANSI Y14.5M-1982 4. MAX. ALL MACH. SURFACES √			USED ON		
			MATERIAL	AS NOTED ABOVE	

FERMI NATIONAL ACCELERATOR LABORATORY
UNITED STATES DEPARTMENT OF ENERGY

COLLIDER DETECTOR FACILITY 17.5 TON SPREADER BAR WELDMENT

SCALE	FILMED	DRAWING NUMBER	REV.
1/8"=1"		2563.9-MD-262383	C

CREATED WITH ICEMDDN VERSION 1.64 | USER NO. 95741

NOTE:

1. USE 7018 WELDING ROD
2. USE LIFTING SCHACKLE WITH AN MIN. OF Ø 2.75 PIN

35000 LBS
ID 31