SPREADER BAR

I.D. Nº 30 COLOR OF BAR: YELLOW

LOAD CAPACITY PAINTED ON BAR 6400 ~~TONS.~~ LBS

DATE CAP. & I.D. Nº PAINTED ON BAR 10-10-89

DATE OF LAST LOAD TEST. 10-9-89

TEST LOAD WEIGHT 8100 ~~TONS~~ LBS (2) "D" BLOCKS

TEST LOAD % 126%

STRESS CALCULATIONS:

DONE BY N. BOSEK

DATE 9-22-89

REMARKS:

— NEW MODIFIED BAR —

SPREADER BAR Nº 30 PAINT COLOR YELLOW

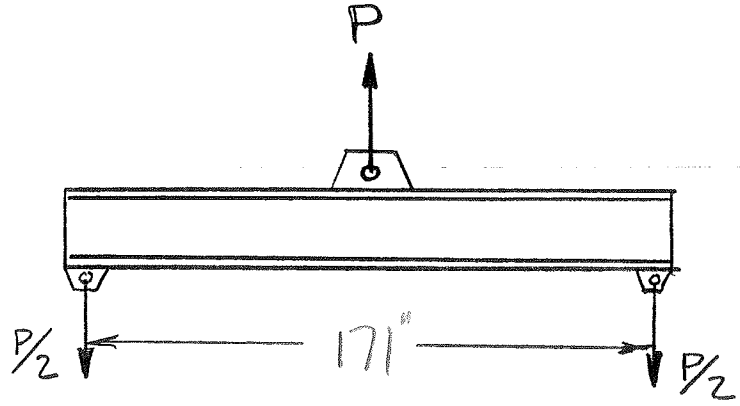

BEAM SIZE 8 x 4 x 3/16 TUBE WITH 1/2 PLATE TOP & BOT.

$d = 9$

$L = 171$

$d/A_f = 3.2727$

$S_x = 25.2078$

$t_w = .187 \times 2$

$A_w = d \cdot t_w = 3.375$

$M = \frac{PL}{4} = 42.75\,P$

$V = \frac{P}{2}$

BENDING STRESS:

$F_{b\ ALLOW} = 12{,}000$ psi

OR $F_{b\ ALLOW} = \frac{12 \times 10^6}{L \cdot d/A_f} = \frac{12 \times 10^6}{171 \times 3.2727} = 21442$ psi

USE THE LEAST

$\therefore f_{b\ MAX} = \frac{M}{S_x} = 12{,}000 = \frac{42.75P}{25.2078}$ $P = 7075$ lb.

SHEAR STRESS:

$F_{V\ ALLOW} = \frac{.4\,F_y}{3} = 4800$ psi

$\therefore f_{V\ MAX} = \frac{V}{A_w} = 4800 = \frac{P}{2} \times \frac{1}{3.375}$ $P = 32400$ lb.

SUMMARY: $\therefore P = 3.5$ TONS

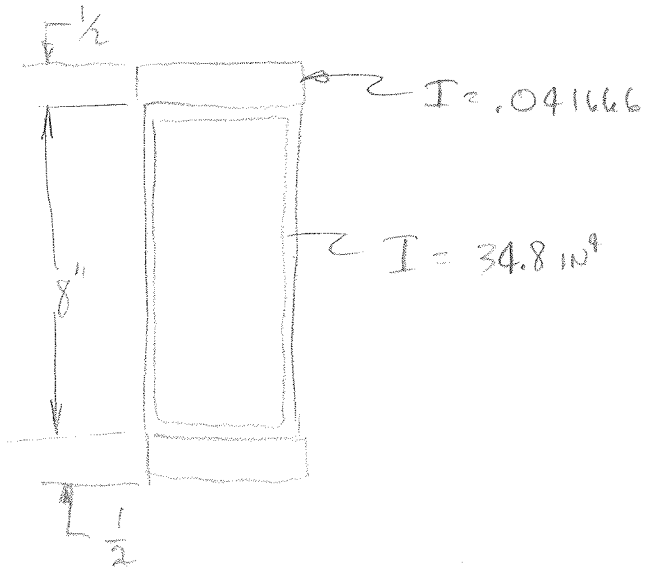

$$I_{TOTAL} = 34.8 + 2(.041666) + (2 \times 4.25^2)2$$

$$I_{TOTAL} = 107.1333 \text{ in}^4$$

$$S = \frac{I}{c} = 25.2078$$

$$\frac{d}{A_f} = \frac{9}{4 \times .687} = 3.2727$$

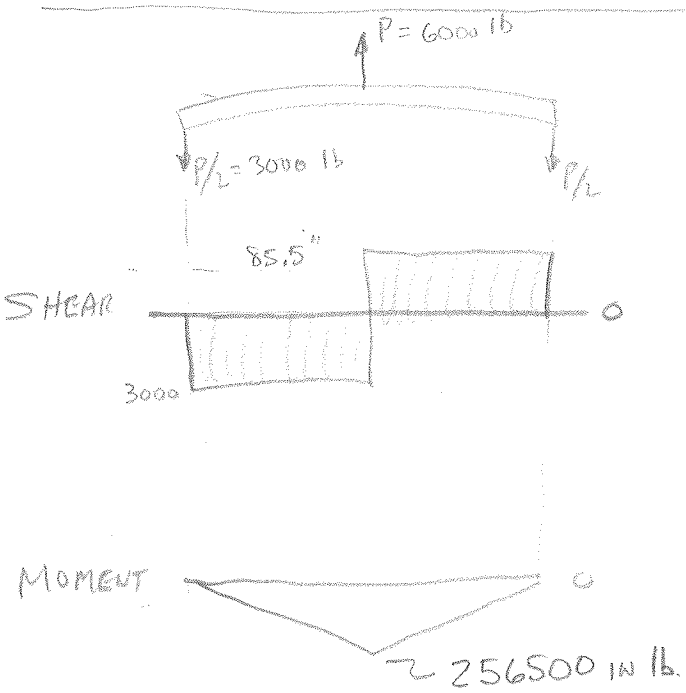

$$F_b = \frac{M}{S} = 10{,}175 \text{ psi}$$

N. Bosek
9-25-84

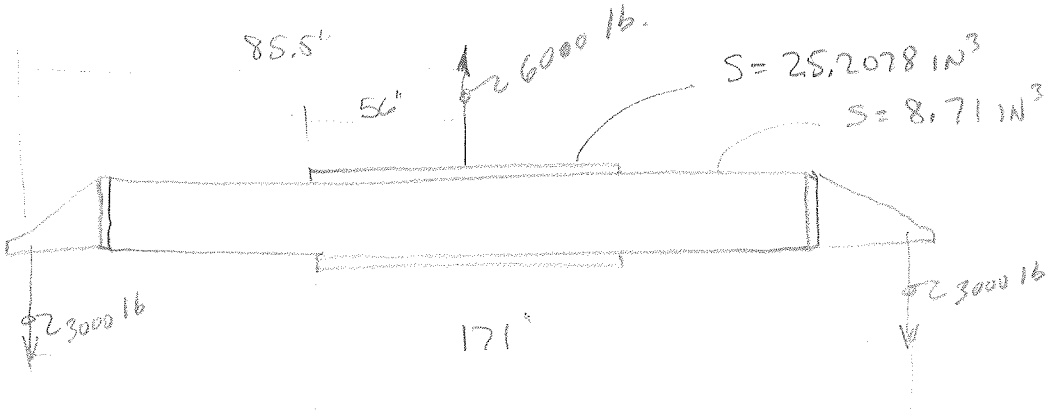

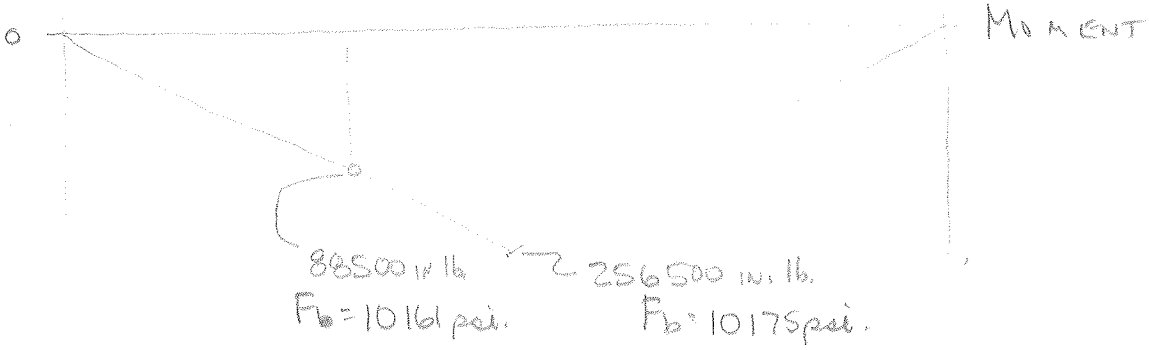

HORIZ. SHEAR :

$f = \frac{VAY}{In}$

$f = 119$ lb/in.

$V = 3000$

$A = 4 \times .5 = 2$

$Y = 4.250$

$I = 107.1337$

$n = 2$

1/8 × 1/8 FILLET = 800 lb/in.

% OF CONT. WELD $\frac{119}{800} = 14.876\%$ use 30%

2" – 6"

use

"OLD BAR"

SPREADER BAR Nº 30 PAINT COLOR YELLOW

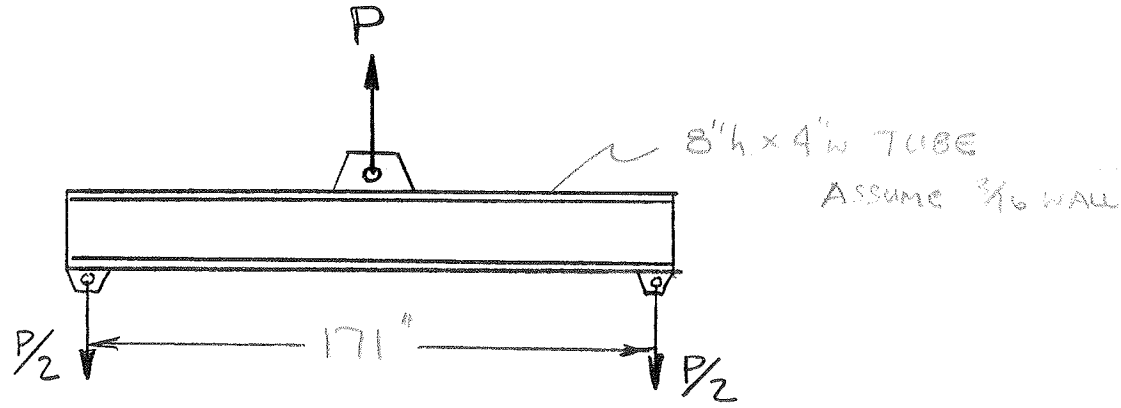

BEAM SIZE 8" x 4" x 3/16 WALL STRUCTURAL TUBE

$d =$ 8"

$L =$ 171

$d/A_f =$ 8/(4x.187) = 10.67

$S_x =$ 8.71

$t_w =$ .187

$A_w = d \cdot t_w =$ 1.5

$M = \frac{PL}{4} =$ 42.75 P

$V = \frac{P}{2}$

ORIGINAL BAR DO NOT USE, SEE NEW BAR CALCULATIONS

BENDING STRESS:

$F_{b\ ALLOW} = 12{,}000$ psi

OR $F_{b\ ALLOW} = \frac{12 \times 10^6}{L \cdot d/A_f} = \frac{12 \times 10^6}{171 \times 10.67} =$ 6578

USE THE LEAST

$\therefore f_{b\ MAX} = \frac{M}{S_x} = 6578 = \frac{42.75\,P}{8.71}$ P = 1340 LBS.

SHEAR STRESS:

$F_{V\ ALLOW} = \frac{.4\,F_y}{3} = 4800$ psi

$\therefore f_{V\ MAX} = \frac{V}{A_w} = \frac{P}{2} \times \frac{1}{1.5} = 4800$ P = 14400 LBS.

SUMMARY: $\therefore$ P = 1300 ~~TONS~~ LBS

BAR #30