LIFTING DEVICE

DEVICE NAME: KTEV HYPERON MAGNET CHANNEL ASSEMBLY FIXTURE

ENGINEERING NOTE NUMBER: 76

DRAWING NUMBER: 3832.223-ME-267848

APPLICABLE STANDARD: ~~AN~~ ASME B30.20-1993

RATED LOAD: 3979 lbs (4000 lbs)

TEST LOAD: 5000 lbs (5150 lbs ACTUAL)

TEST LOAD PERCENT: 1.25

LAST LOAD TEST DATE: 5/4/95

COLOR: YELLOW

STRESS CALCULATIONS:

Done by: JAMES KILMER

Date: MARCH 23, 1995

Reviewed by: Robert Webb

Date: April 11, 1995

REMARKS:

TEST BLOCK WAS STEEL PLATE 5½" X 18" X 116"

IDENTIFICATION:

Engineering Note Number & Rated Load Must be Clearly Marked On a Conspicuous Surface.

THIS NOTE DOCUMENTS THE STRESSES IN THE LIFTING FIXTURE USED TO ASSEMBLE THE CHANNEL FOR THE E-8 HYPERON MAGNET FOR KTEV (DWG 3832.223-ME-267848). THE FIXTURE HAS TWO PURPOSES. DURING THE ASSEMBLY OF THE CHANNEL IT IS USED TO ~~ASSEMB~~ INSTALL THE COPPER WATER COOLING TUBES IN THE COPPER PLATES. THE INSTALLATION IS AS FOLLOWS: THE COPPER PLATES ARE SET ON A TABLE IN THEIR PROPER ORIENTATION AND THE FIXTURE IS BOLTED TO THE CU PLATES USING THE HOLES PROVIDED. USING THE FIXTURE SUPPORTED ON IT'S TRUNIONS THE CU PLATES ARE ROTATED TO THE BOTTOM SIDE UP POSITION TO INSTALL THE BOTTOM COOLING TUBE IN IT'S GROOVE. THE FIXTURE IS THEN ROLLED BACK UPRIGHT AND USED TO SET THE CU PLATES INTO FINAL POSITION ON THE STEEL BOTTOM PLATE OF THE CHANNEL. THE COPPER PLATES ARE TEMPORARILY BOLTED TO THE STEEL PLATE, THE FIXTURE IS REMOVED, AND THE TOP COPPER COOLING TUBE IS INSTALLED. THE PROCESS IS REPEATED FOR THE COPPER PLATES FOR THE OTHER SIDE OF THE CHANNEL.

WHEN THE ENTIRE CHANNEL IS FINISHED THE FIXTURE IS USED AS THE LIFTING FIXTURE FOR THE WHOLE CHANNEL SECTION. THE CENTER 16 CAP SCREWS ARE REMOVED, THE FIXTURE IS SET OVER THE CHANNEL AND LONGER SCREWS ARE USED TO BOLT THE FIXTURE TO THE CHANNEL SECTION INTO THE BOTTOM STEEL PLATE. THE TRUNIONS ARE NEVER USED TO TURN OVER THE ENTIRE CHANNEL SECTION. THE FIXTURE IS DESIGNED TO MEET SAFETY FACTORS GREATER THAN 3 PER ASME B30.20-1993. ALL OF THE WELDING WAS DONE WITH AN E-70 ROD.

1. CALCULATE wt of SECTIONS
EACH IS 3'x 9' LONG

STEEL PLATES (WEIGHTS FROM RYERSON CATALOG)

$$(2\ \text{PLATES})\left(40.84\ \frac{lb}{ft^2}\right)\left(\frac{1.025''}{1''}\right)\left(27\ ft^2\right) = 2414.86\ lbs$$

COPPER INSERTS

$$\left(20\ \frac{lbs}{PLATE}\right)\left(\frac{1.330''}{1.5''}\right)\left(\frac{2 \cdot 16.887''}{36''}\right)\left(\frac{108''}{120''}\right) = 1564.6\ lbs$$

MAXIMUM FIXTURE LOAD TOTAL wt of SECTION = 3979.55 lbs

2. CALCULATE SHEAR STRESS IN I BEAM TO 1" PLATE WELD

WEIGHT SUPPORTED =	3979.55 lbs		CHANNEL SECTION
+	283.3	lbs	1" PLATE
+	100	lbs	MISC
	4362.85	lbs	

AREA OF WELD THROAT:
WELD IS 6-12 SKIP WELD 1/4" BEAD FOR BOTH SIDES

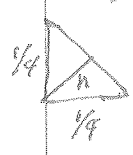

$$h = \frac{.25''}{1.414} = .177\ in$$

$$\text{STRESS AREA} = \left(\frac{108\ in \times 2\ sides}{2}\right) \cdot .177\ in = 19.1\ in^2$$

$$\text{STRESS} \quad \sigma_w = \frac{4362.85\ lbs}{19.1\ in^2} = 228.5\ PSI \Rightarrow OK!$$

3. CALCULATE BOLT STRESS / TORQUE REQUIRED, TO CARRY ENTIRE SECTION

16 BOLTS 3/8-16 NC

CHANNEL SECTION WT 3979.5 lbs

$$\frac{3979.5\ lbs}{16\ BOLTS} = 248.7\ lbs/BOLT$$

FROM MECHANICAL ENGINEERING DESIGN BY SHIGLEY & MITCHELL
Pg 378

TORQUE FOR A BOLT

$$T = .20\ F d$$

F (with SAFETY FACTOR OF 3)
$= (248.7\ lbs) \cdot 3 = 750\ lbs$

$$T = .20(750\ lbs)(.375\ in)$$
$$= 56.25\ in/lbs.$$

STRESSES IN BOLT THREADS 3/8-16 NC

$$\tau = \frac{2F}{\pi d h}$$

F = FORCE = 750 lb (3X SAFETY FACT)
d = .2983 in (MINOR DIAM)
h = 2 X .375 in = .75 in

$$= \frac{2\ (750\ lbs)}{\pi (.2983\ in)(.75\ in)}$$

$$= 2134\ PSI$$

STRESSES IN TAPPED THREADS

$$\tau = \frac{2F}{\pi d h}$$

F = 750 lbs
d = MAJOR DIAM = .375 in
h = 2 X .375 in = .75 in

$$= \frac{2\ (750\ lbs)}{\pi (.375\ in)(.75\ in)}$$

$$= 1697.65\ PSI$$

FOR THE BOLTS (18-8 STAINLESS STEEL) FROM ASME B31.1, 1992 EDITION POWER PIPING THE ALLOWABLE TENSILE STRESS IS AT MINIMUM 18800 PSI. BOLTS HAVING THIS TENSILE WOULD HAVE A SHEAR STRESS 18800 PSI/2 = 9400 PSI ALLOWABLE SHEAR STRESS. OUR BOLT SHEAR STRESS HAS A SAFETY FACTOR OF 9400/2100 = 4.47 > 3 REQUIRED FOR LIFTING FIXTURES.

FOR THE PLATE MADE OF 1020 HOT ROLLED SHEET RYERSON'S CATALOG LISTS YIELD STRENGTH AS 32 KSI, SO MAXIMUM ALLOWABLE SHEAR STRESS WOULD BE 32 KSI X .3 = 9.6 KSI. SHEAR STRESS SAFETY FACTOR IN THE PLATES IS THEN 9600/1697 = 5.6 WHICH IS GREATER THAN 3 TIMES

STRAIGHT TENSILE STRESS ON BOLTS

16 BOLTS W/ 250 lb TENSION PER BOLT

BASIC MINOR DIAMETER OF 3/8-16 BOLT = .2983 in

$$\sigma = \frac{F}{A} = \frac{250\,lb}{\frac{\pi}{4} d^2} = \frac{(250\,lbs)\,4}{\pi\,(.2983\,in)^2}$$

$$= 3577\ PSI$$

FROM ASME B31.1 FOR 18-8 BOLTS MAXIMUM ALLOWABLE TENSILE STRESS IS 18,800 PSI.

$$\text{SAFETY FACTOR} = \frac{18{,}800\,PSI}{3{,}500\,PSI} = 5.25 > 3 \text{ REQUIRED}$$

INSTEAD OF THREAD STRESSES LOOK AT LENGTH OF THREAD ENGAGEMENT
FORMULAS FROM MACHINERY'S HANDBOOK, pg 1278-9, 23RD EDITION.

FOR STEELS < 100KSI ULTIMATE TENSILE STRENGTH (BOTH 18-8 BOLTS AND 1020 PLATE)

$$A_t = .7854\left(D - \frac{.09743}{n}\right)^2 \quad \text{where } D = .375\,in,\ n = 16 \text{ threads/in}$$

$$= .7854\left(.375 - \frac{.09743}{16}\right)^2$$

$$= .106\,in^2$$

for 3/8-16NC screws
$A_t = .106\,in^2$
$K_{n\,max} = .321\,in$
$E_{s\,min} = .3287\,in$

LENGTH OF ENGAGEMENT REQUIRED

$$L_e = \frac{2 \times A_t}{(3.1416)(K_{n\,max})\left[\frac{1}{2} + 0.57735\,n\,(E_{s\,min} - K_{n\,max})\right]}$$

$$= \frac{2\,(.106\,in^2)}{(3.1416)(.321\,in)\left[\frac{1}{2} + (0.57735)(16)(.3287\,in - .321\,in)\right]}$$

$$= .368\,in$$

NOW CHECK TO SEE IF L_e NEEDS TO BE MODIFIED FOR STRIPPING OF INTERNAL THREADS — BOLTS ARE HIGHER TENSILE STRENGTH THAN PLATE

$$A_s = 3.1416\,n\,L_e\,K_{n\,max}\left[\frac{1}{2n} + .57735\,(E_{s\,min} - K_{n\,max})\right]$$

$$= (3.1416)(16)(.368)(.321)\left[\frac{1}{32} + .57735\,(.3287 - .321)\right]$$

$$= .212$$

$$A_n = 3.1416\,n\,L_e\,D_{s\,min}\left[\frac{1}{2n} + .57735\,(D_{s\,min} - E_{n\,max})\right]$$

$D_{s\,min} = .3643$
$E_{n\,max} = .3401$

$$= (3.1416)(16)(.368)(.3643)\left[\frac{1}{32} + .57735\,(.3643 - .3401)\right]$$

$$= .304$$

$$J = \frac{A_s \times \text{ULTIMATE TENSILE OF EXTERNAL THREADS}}{A_n \times \text{ULTIMATE TENSILE OF INTERNAL THREADS}}$$

$$= \frac{.212 \times 125\,KSI}{.304 \times 58\,KSI}$$

$$= 1.5$$

18-8 ULTIMATE = 125 KSI
(FROM B31.1 PIPING CODE)

FOR 1020 ULTIMATE = 58 KSI
FROM RYERSON CATALOG

$G = J L_e$ = Required thread engagement

$= (1.5)(.368\,in)$

$= .553\,in$

AS A CHECK USE MACHINERY'S HANDBOOK FORMULA FOR MAXIMUM ALLOWABLE LOAD ON A BOLT (Pg 1278)

$$W = S_t\,(.55d^2 - .25d)$$

EMPIRICAL FORMULA

S_t OF BOLTS = 18,800 PSI
MAX ALLOWABLE TENSILE STRESS

d = .375 = NOMINAL BOLT ϕ

$$= 18{,}800\,PSI\,[.55(.375\,in)^2 - .25(.375\,in)]$$

$$= -308\,lbs\ FORCE$$

(OUR BOLTS SEE A MAXIMUM TENSILE LOAD OF ~250 lbs each.

LUG WELDS

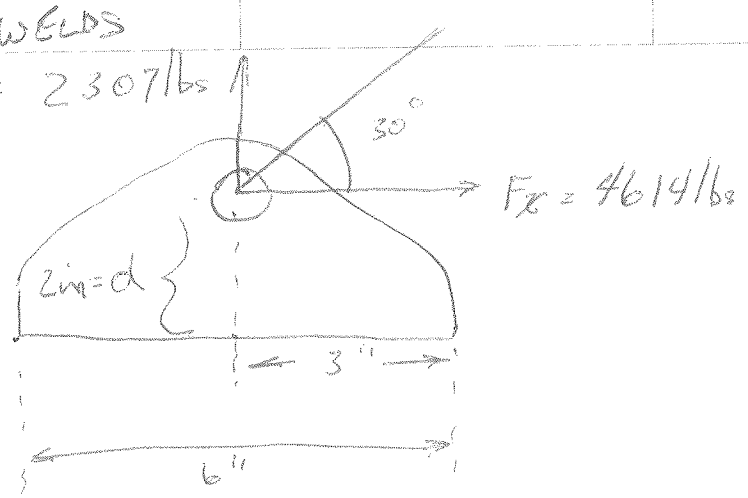

USING FORMULAS FROM DESIGN OF WELDMENTS BY BLODGETT, 1972 page 6.3-3,4 "WELDS AS LINES"

LIMIT ANGLE TO GREATER THAN 30° TO LIMIT $F_x \leq 4614$ lbs.

$$f_v \text{ Tension} = \frac{F_y}{A_w} = \frac{2307 \text{ lbs}}{14 \text{ in}}$$

$$= 164.78 \text{ lb/in}$$

$$f_h \text{ SHEAR} = \frac{F_x}{A_w} = \frac{4614 \text{ lbs}}{14 \text{ in}}$$

$$= 329.6 \text{ lb/in}$$

$$\text{MOMENT} = (4614 \text{ lbs})(2 \text{ in})$$

$$= 9228 \text{ in lbs}$$

$$S_w = bd + \frac{d^2}{3} = (1 \text{ in} \times 6 \text{ in}) + \frac{36 \text{ in}}{3}$$

$$= 18 \text{ in}^2$$

$$f = \frac{M}{S_w} = \frac{9228 \text{ in lbs}}{18 \text{ in}^2}$$

$$= 512.6 \text{ lbs/in}$$

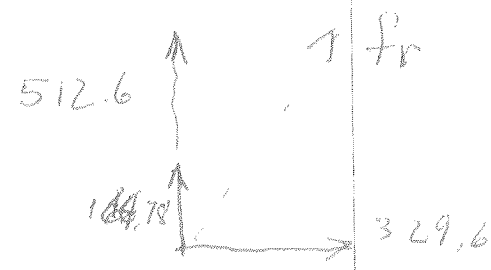

$$f_r = \sqrt{(512.6 + 164.78)^2 + (329.6)^2}$$

$$= 753.4 \text{ lbs/in}$$

Required weld in $h = \dfrac{753.4 \text{ lb/in}}{11{,}200 \text{ lb/in}^2/\text{in}}$: .067 in at throat.

INSTALLED WELDS ARE 1/4"

CALCULATE WEB TEAR-OUT OF LUG

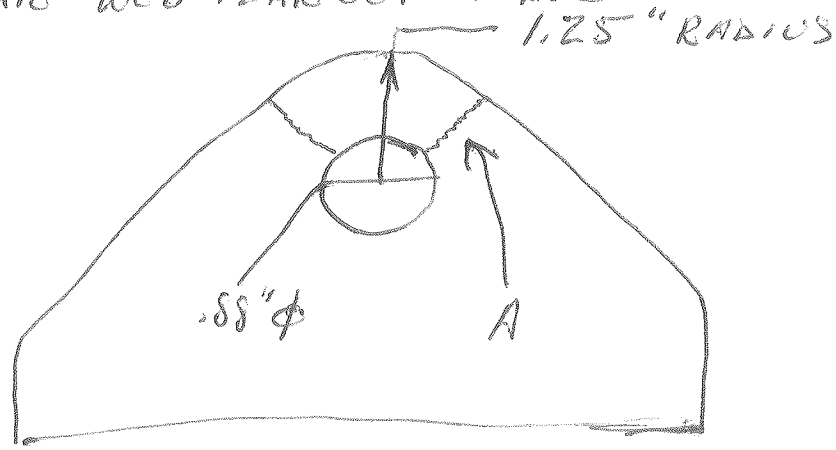

MINIMUM TEAROUT AREA

$$1.25'' - \left(\frac{.88''}{2}\right) = .81 \text{ in}$$

$$A = (1 \text{ in thick})(.81 \text{ in})$$
$$= .81 \text{ in}^2$$

FORCE IS $\frac{4614 \text{ lbs}}{2} = 2307 \text{ lbs / LUG}$

$$\sigma = \frac{F}{A} = \frac{2307 \text{ lbs}}{2 \cdot (.81 \text{ in}^2)} = 1424 \text{ PSI}$$

THIS IS GREATER THAN A SAFETY FACTOR OF 3 ON THE TENSILE STRENGTH OF CARBON STEEL.

THE HOLE IS DESIGNED FOR A SHACKLE WITH A 7/8" PIN. TYPICAL 7/8" SHACKLES ARE RATED AT 13,000 lbs EACH. THE HOLE IS DESIGNED PER AISC WITH A HOLE TO EDGE SPACING OF 1.5 X THE HOLE DIAMETER

BENDING IN THE BEAM AT FULL LOAD

USE CASE 2e pg 104 FROM ROARK AND YOUNG FORMULAS FOR

$$w_a = \frac{4614 \text{ lbs}}{108 \text{ in}} = 42.7 \frac{\text{lbs}}{\text{in}}$$

$$\text{MAX } M = \frac{w_a \ell^2}{8} = \frac{(42.7 \text{ lb/in})(55 \text{ in})^2}{8}$$

$$= 16146 \text{ lb in}$$

$$\text{Max } \sigma = \frac{M}{S}$$

FOR A W8x28 I BEAM
$S = 24.3 \text{ in}^3$

$$\sigma = \frac{16146 \text{ lb in}}{24.3 \text{ in}^3}$$

$$\sigma = 664 \text{ PSI}$$

FOR A STRUCTURAL I BEAM THIS IS A SAFETY FACTOR GREATER THAN 3.

THE TRUNIONS ARE USED TO ASSEMBLE TWO COPPER PLATES INTO A UNIT BY EPOXYING IN THE COOLING TUBES BEFORE FINAL ASSEMBLY INTO THE CHANNEL.

WEIGHT SUPPORTED BY THE TRUNIONS IS I BEAM + 1/2 OF TOTAL OF COPPER INSERTS = 256 lb + 1564 lbs = 1816 lbs

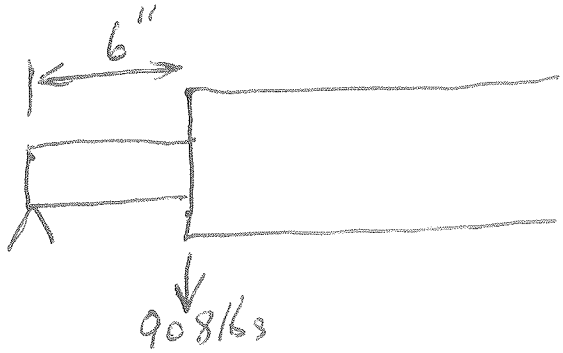

FROM ROARK & YOUNG "FORMULAS FOR STRESS AND STRAIN" USE CASE 1A TABLE 3 pg 100

$a = 0$ so $\text{MAX } M = -wl = (908\text{ lbs})(6\text{ in})$

$= 5448 \text{ lb in}$

$\text{Max } \sigma = \frac{Mc}{I}$

$= \frac{(5448 \text{ lb in})(1.5 \text{ in})}{3.97 \text{ in}^4}$

$= 2054 \text{ PSI}$

TRUNION IS 3" ϕ X 6" LONG

$I = \frac{\pi}{4} R^4 = \frac{\pi}{4}(1.5 \text{ in})^4$

$= 3.97 \text{ in}^4$

$c = R = 1.5 \text{ in}$

⟹ BENDING IS >THAN SAFETY FACTOR OF 3 REQUIRED

NOW LOOK AT WELD

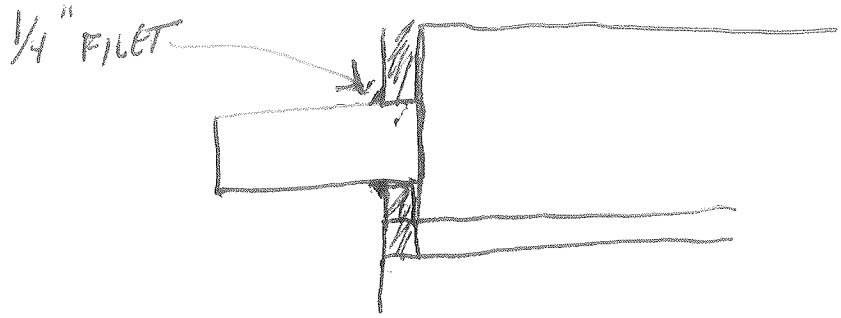

TRUNION WELD USING BLODGETTS LINE METHOD

$$M = (908\,lbs)(6\,in)$$
$$= 5448\ in\ lbs$$

$$S_w = \frac{\pi}{4} d^2$$

$$= \frac{\pi}{4}(3\,in)^2$$

$$= 7.06\ in^2$$

$$f = \frac{M}{S_w} = \frac{5448\ in\ lbs}{7.06\ in^2}$$

$$= 770\ \frac{lbs}{in}$$

weld needed.

$$= \frac{770\ lbs/in}{11{,}200\ lb/in/in}$$

$$= .068\ in$$

∴ 1/4" fillet weld is OK!

REV.	DESCRIPTION	DRAWN	DATE
		APPROVED	DATE

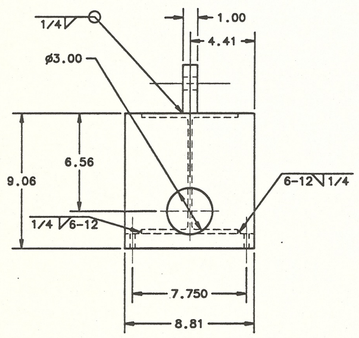

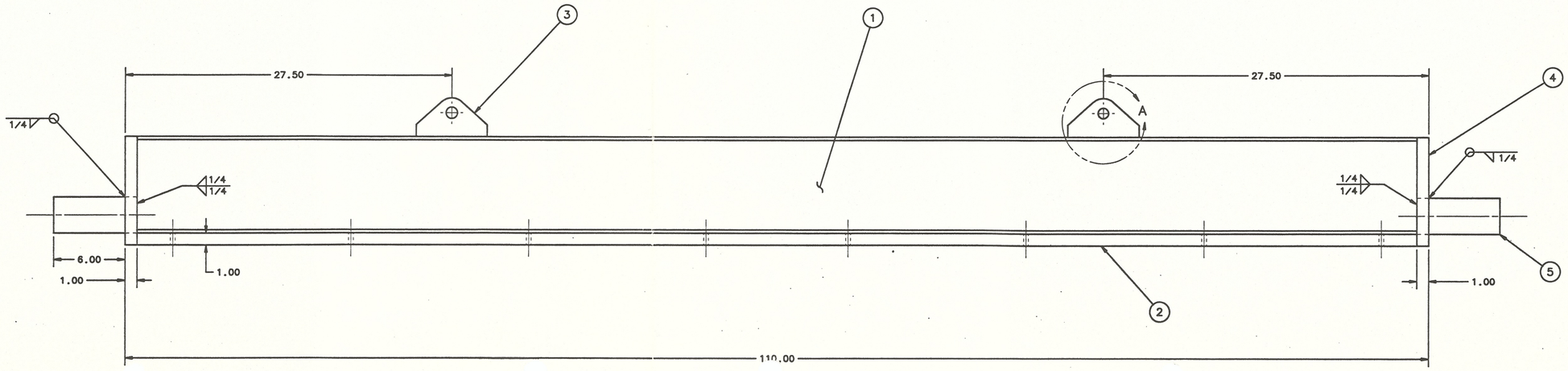

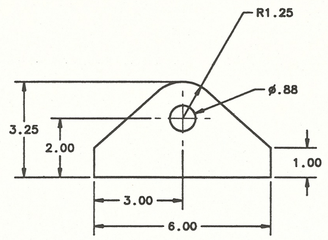

DETAIL A
SCALE: 1/2"=1"

1 1/8
1 1/8
7 3/4

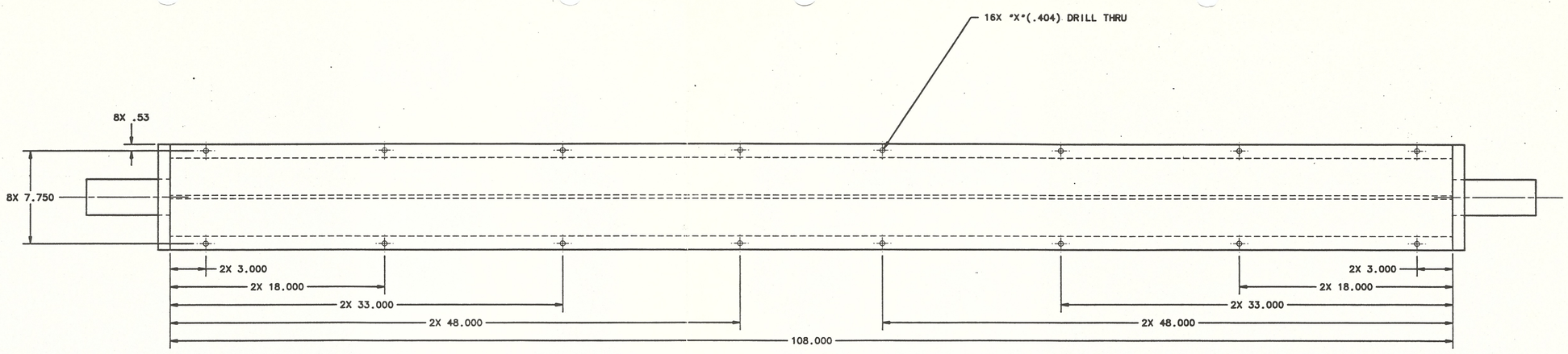

ITEM NO.	PART NO.	DESCRIPTION OR SIZE	QTY. REQ.
5	1530-5230	ROUND, ø3" x 7" LG.	2
4	1530-2120	STEEL, 1"x8.81"x9.06" LG.	2
3	1530-2170	STEEL, 1"x4"x6" LG.	2
2	1530-2120	STEEL, 1"x8.81"x108.00" LG.	1
1	EXISTING	I-BEAM W8x28 x 108.00" LG.	1

PARTS LIST

UNLESS OTHERWISE SPECIFIED			ORIGINATOR	JIM KILMER	AUG 94
.XX	.XXX	ANGLES	DRAWN	VIC MAJDANSKI	12 SEP 94
± .01	± .005	± .50°	CHECKED		9-20-94
			APPROVED		9/20/94
			USED ON	ME-267847	
			MATERIAL		

1. BREAK ALL SHARP EDGES .015 MAX.
2. DO NOT SCALE DRWG.
3. DIMENSIONING IN ACCORD WITH ANSI Y14.5M-1982 STD'S.
4. ALL DIMENSIONS ARE IN INCHES.

125 √ MAX. ALL MACHINED SURFACES

APR 1995
REFERENCE ONLY
Not For Fabrication

FERMI NATIONAL ACCELERATOR LABORATORY
UNITED STATES DEPARTMENT OF ENERGY

RD/MECHANICAL SUPPORT DEPT.
KTEV/HYPERON MAGNET SUPPORT SYSTEM
HYPERON MAGNET CHANNEL, I-BEAM LIFTING FIXTURE

SCALE	DRAWING NUMBER	SHEET NO.	REV.
1/4	3832.223-ME-267848	1 OF 1	

REV.	DESCRIPTION	DRAWN / APPROVED	DATE / DATE
A	CORRECTED TO SHOW PROPER ORIENTATION OF COPPER TUBE CUTOUT	VIC M / JRK	02 NOV 94 / Nov 2 94

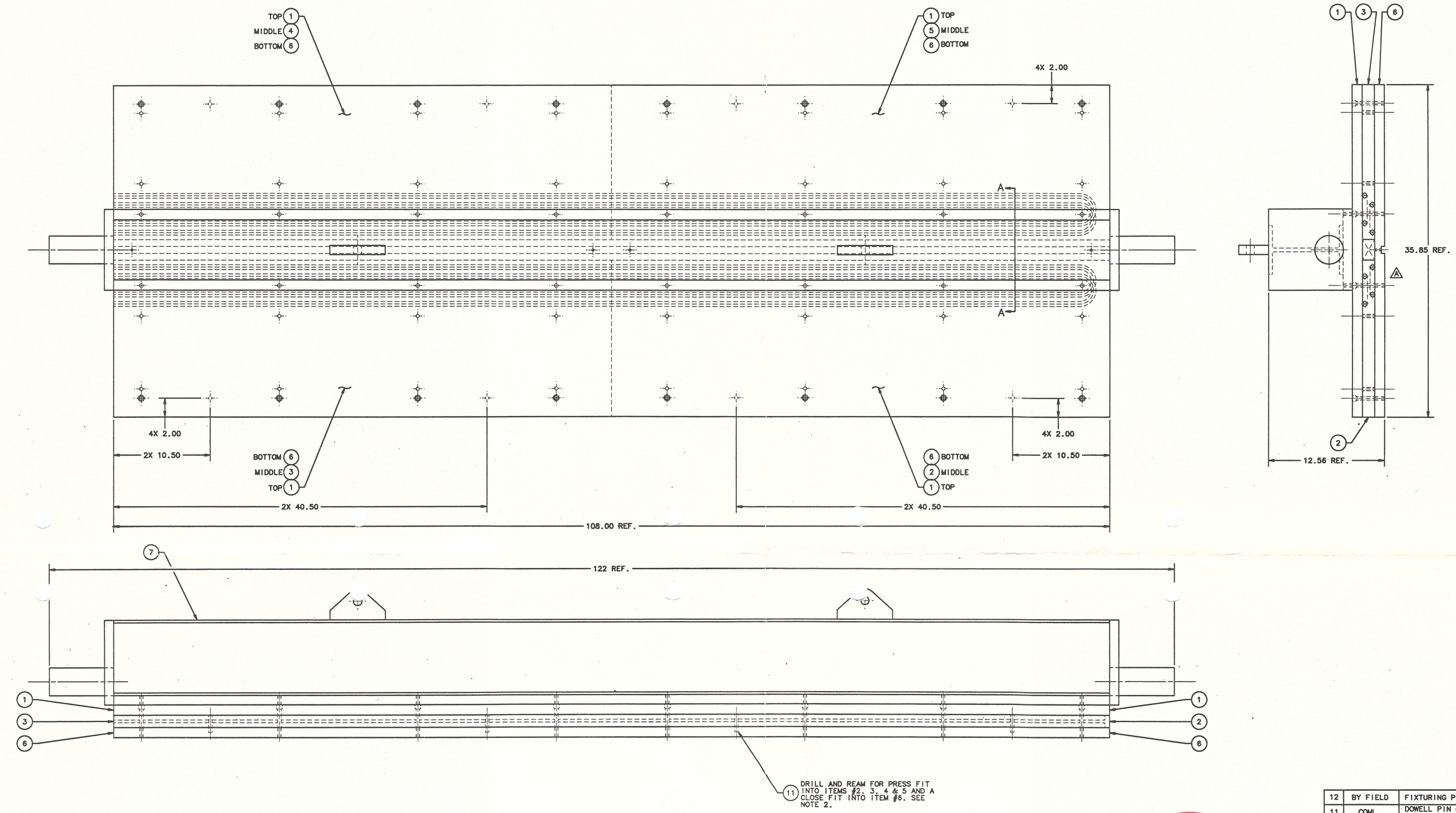

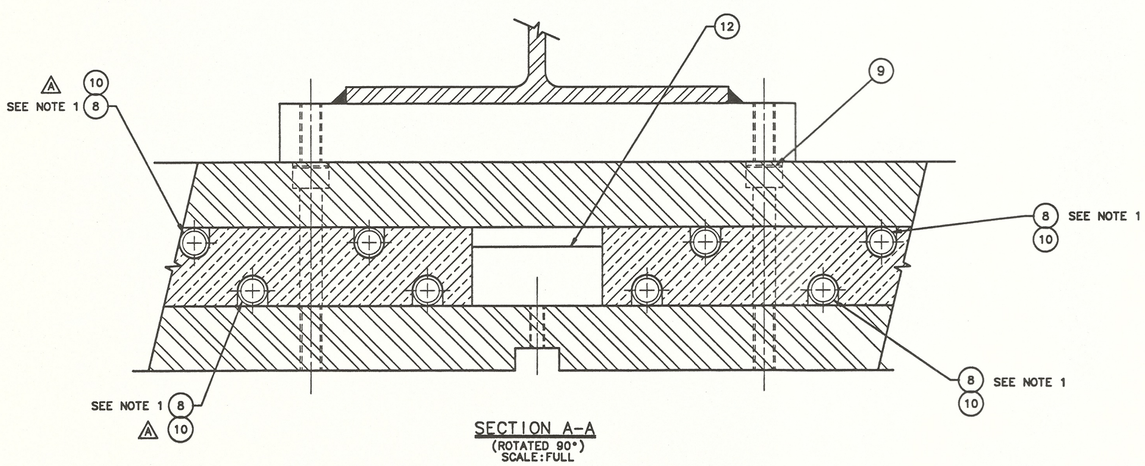

SECTION A-A
(ROTATED 90°)
SCALE:FULL

NOTES:

1. ANNEAL COPPER PIPE PRIOR TO BENDING. THERE WILL BE NO JOINTS IN THE CHANNEL COPPER.
2. DOWELL PINS' (ITEM #11) LOCATION SHALL BE DETERMINED BY THE FIELD.

APR 1995
REFERENCE ONLY
Not For Fabrication

ITEM NO.	PART NO.	DESCRIPTION OR SIZE	QTY. REQ.
12	BY FIELD	FIXTURING PIN	4
11	COML	DOWELL PIN ø.250 NOM. x 2'' LG., 416 S.S.	8
10	COML	EPOXY HEAT CONDUCTIVE	AS REQ'D
9	1226-1180	3/8-16UNC-2B SOCKET HD. BOLT x 3" LG. 304 STN. STL.	32
8	COML	PIPE, COPPER, ø3/8 x .049 WALL 1/2" O.D.	AS REQ'D
7	ME-267848	I-BEAM LIFTING ASSEMBLY	1
6	ME-267846	STEEL BOTTOM PLATE	1
5	MD-267844	COPPER PLATE-4	1
4	MD-267843	COPPER PLATE-3	1
3	MD-267842	COPPER PLATE-2	1
2	MD-267841	COPPER PLATE-1	1
1	ME-267845	STEEL TOP PLATE	1

PARTS LIST

UNLESS OTHERWISE SPECIFIED					
.XX	.XXX	ANGLES	ORIGINATOR	JIM KILMER	AUG 94
± .06	±.030	± 1°	DRAWN	VIC MAJDANSKI	12 SEP 94
			CHECKED	DON FRIEND	9-20-94
			APPROVED	JIM KILMER	9-20-94

1. BREAK ALL SHARP EDGES .015 MAX.
2. DO NOT SCALE DRWG.
3. DIMENSIONING IN ACCORD WITH ANSI Y14.5M-1982 STD'S.
4. ALL DIMENSIONS ARE IN INCHES.

125 MAX. ALL MACHINED SURFACES

USED ON

MATERIAL SEE PARTS LIST

FERMI NATIONAL ACCELERATOR LABORATORY
UNITED STATES DEPARTMENT OF ENERGY

RD/MECHANICAL SUPPORT DEPT.
KTEV/HYPERON MAGNET SUPPORT SYSTEM
HYPERON MAGNET CHAMBER-ASSEMBLY

SCALE	DRAWING NUMBER	SHEET NO.	REV.
1/4	3832.223-ME-267847	1 OF 1	A