LIFTING DEVICE

DEVICE NAME: 20 TON, LOW HEIGHT LIFTING FIXTURE

ENGINEERING NOTE NUMBER: 75

DRAWING NUMBER: 3832.

APPLICABLE STANDARD: ASME B30.20 - 1993

AISC 9th EDITION ASD

RATED LOAD: 20 TONS (40,000 POUNDS)

TEST LOAD: 25 TONS.

TEST LOAD PERCENT: 25%

LAST LOAD TEST DATE:

COLOR: YELLOW

STRESS CALCULATIONS:

Done by: DAVE PUSHKA

Date: 21 MARCH 1995

Reviewed by: ANG LEE

Date: 31 MARCH 1995

REMARKS:

IDENTIFICATION:

Engineering Note Number & Rated Load Must be Clearly Marked On a Conspicuous Surface.

MECHANICAL SUPPORT DEPARTMENT
ENGINEERING NOTE

NUMBER: MSD EN-2.3.3 - KTeV
(WBS number items 2.3.3)

DATE: 21 March 1995

TITLE: Design Note for the 20 ton capacity, low height, Lifting Fixture used to for the KTeV target pile steel installation

AUTHOR(s): Dave Pushka

REVIEWER: March 1995

KEY WORDS: Lifting Fixture

ABSTRACT/SUMMARY:

This design note contains the calculations required to size member used for the lifting fixture. Allowable stresses are based on those calculated from AISC 9th edition and from ASME B30.20 'Under-the-Hook Lifting Fixtures'. The most conservative of the two values calculated from each Code was used.

This fixture was designed to allow a single point pick of the top layers of the target pile steel in NM2 for KTeV. The target pile is so high that use of existing fixtures is not possible because of hook height limitations.

This fixture uses A325 bolting for attachment to the steel. Although the stress is very low on the bolts (below AISC allowables due to 1/3 yield limitation from ASME B30.20) the bolts should be replaced approximately every ten picks to avoid potential fatigue problems with the high strength bolting.

Note that this fixture must be centered over the C.G. (center of gravity) of the load as it is not designed for moments which would result from non-centered loads.

Table of Contents:

	Description	PAGE
1.	Bolt Sizing Calculations	1
2.	Pin Sizing Calculations	2
3.	Bottom and Side Plate Sizing Calculations	3
4.	Weld Sizing	4
5.	Fixture Testing Set Up	5

FERMILAB ENGINEERING NOTE	SECTION	PROJECT	SERIAL-CATEGORY	PAGE
	RD/MSD	KTEV	2.3.4 KUH	1

SUBJECT	NAME	DATE	REVISION DATE
TARGET PILE LIFT FIXTURE.	DAVE POSHKA	15 MAR '95	

NOMINAL DESIGN CAPACITY = 20 TONS = 40 KIPS

ASME LIMITS ALLOWABLE TENSION TO 1/3 F_Y →

IF A325 BOLTING IS USED, THIS IMPLIES F_A GOES FROM 44 KSI TO 27 KSI BASED ON THE NOMINAL AREA.

$$A_{REQ'D} = \frac{40 \text{ KIPS}}{27 \text{ K/IN}^2} = 1.48 \text{ IN}^2$$

∴ NEED (2) 1"Ø BOLTS.

DESIGN USING MILD STEEL, F_Y = 30 KSI ∴ F_A = 10 KSI

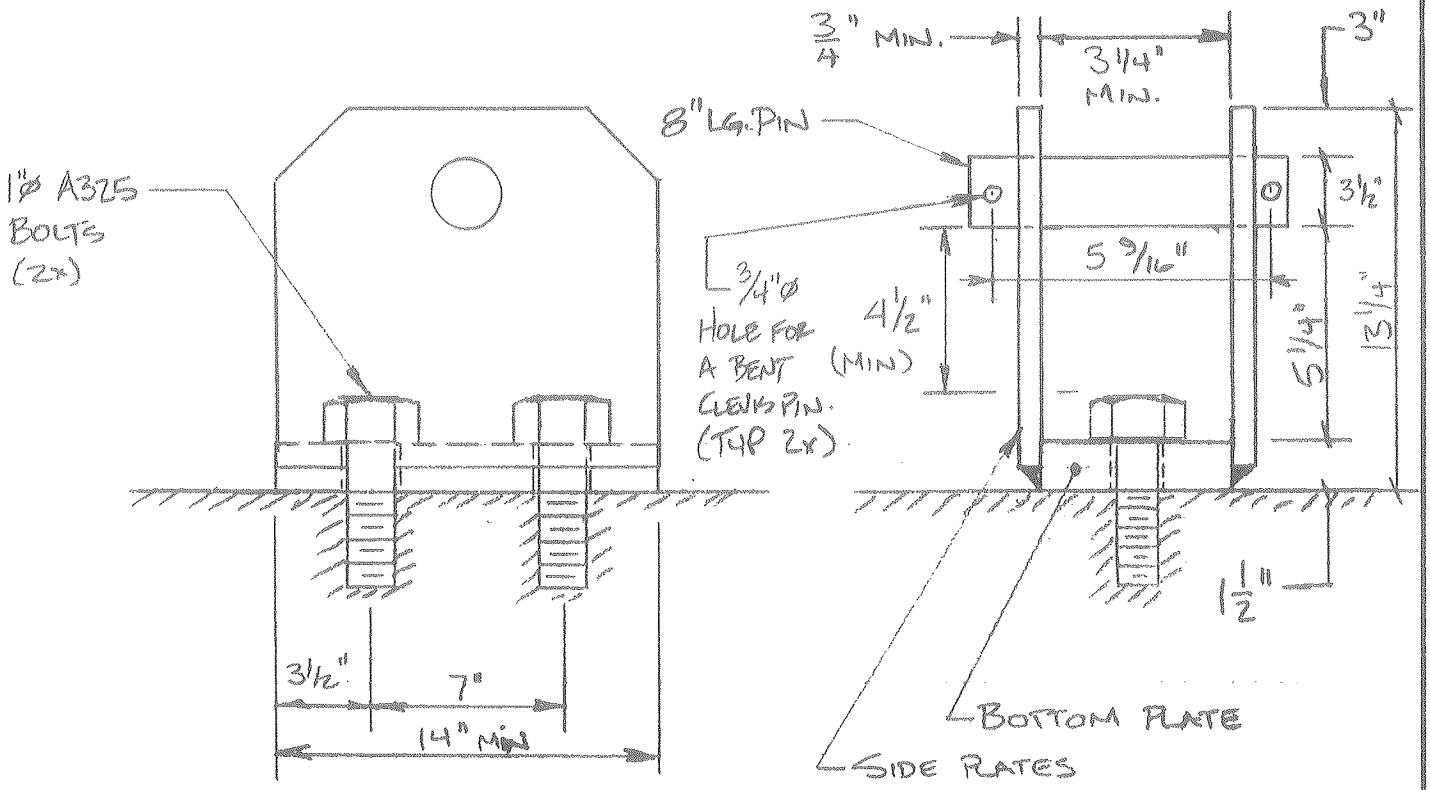

FROM MIKE MASCIONE, THE HOOK WITH IS JUST LESS THAN 3 1/4" AND THE OPTIMUM SPACE FROM THE BOLT HEAD TO THE BOTTOM OF THE ROUND IS 4 1/2" IF THE PIN IS REMOVABLE AND 9" IF IT IS FIXED.

567461

FERMILAB ENGINEERING NOTE	SECTION	PROJECT	SERIAL-CATEGORY	PAGE
	RD/MSD/MSS	KTEV	23.4 KUH	2

SUBJECT	NAME	DATE	REVISION DATE
TARGET PILE LIFTING FIXTURE.	DAVE PUSHKA	21 MARCH '95	

SINCE $F_A = 10$ KSI THE TENSILE AREA IS $A_{TEN} = \frac{40 \text{ KIPS}}{10 \text{ KSI}} = 4 \text{ IN}^2$

AND SINCE SHEAR IS ALSO LIMITED TO 10 KSI $A_{SHEAR} = \frac{40 \text{ K}}{10 \text{ KSI}} = 4 \text{ IN}^2$

SIZING THE PIN: $M = \frac{Pl}{4}$

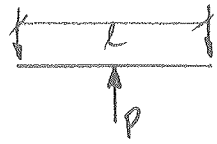

ASSUME $L = 4''$

$$M = \frac{(40 \text{ KIP})(4 \text{ IN})}{4} = 40 \text{ KIP-IN}$$

$$\sigma = \frac{M}{S} = 10 \text{ KSI} \rightarrow S = \frac{40 \text{ KIP-IN}}{10 \text{ KSI}} = 4 \text{ IN}^3$$

FOR CIRCULAR SECTIONS, $S = \frac{\pi d^3}{32}$ $\therefore$ $d = \left(\frac{(32)S}{\pi}\right)^{1/3} = 3.4''$

CHECK $3\frac{1}{2}''\varnothing$ ROUND $\rightarrow$ $I = \frac{\pi d^4}{64} = 7.36 \text{ IN}^4$

$$\sigma = \frac{(40 \text{ KIP-IN})(1.75)}{7.36} = 9.5 \text{ KSI}$$

$3\frac{1}{2}''\varnothing$ MAY NOT FIT WITHIN THE CRANE HOOK. TRY USING STRONGER STEEL, AISI 1144 HAS $F_y = 53$ KSI $\therefore$ $F_A = 17.6$ KSI

$$S = \frac{40 \text{ KIP-IN}}{17.6 \text{ KSI}} = 2.2 \text{ IN}^3 \rightarrow d = 2.8 \text{ IN}\varnothing$$

IF SPAN IS REDUCED TO $3\frac{1}{4}''$, $M = \frac{40 \text{ KIP}}{4} 3\frac{1}{4} = 32.5$ KIP-IN

$$S_{REQD} = \frac{32.5 \text{ KIP-IN}}{17.6 \text{ KSI}} = 1.84 \text{ IN}^3, \quad d = 2.66''\varnothing$$

BASED ON A CONVERSATION W/ ROGER TOKAREK, THE HOOK COULD ACCOMODATE A $6''\varnothing$ PIN. THEREFORE, WILL MAKE THE PIN $3\frac{1}{2}''\varnothing$, $F_y = 30$ KSI (AISI 1018) MATERIAL.

PIN IN DOUBLE SHEAR, $\tau = \frac{40{,}000 \#}{(2)\frac{\pi}{4}(3.5^2)} \cong 2 \text{KSI}$

$$\sigma_{MAX} = (\sigma_B^2 + \tau^2)^{1/2} = (9.5^2 + 2^2)^{1/2} \cong 9.7 \text{ KSI} < 10 \text{ KSI} \therefore \text{OK}$$

NOTE (3/29/95) MEASURED HOOK, $3\frac{1}{2}''\varnothing$ PIN IS SATISFACTORY.

587461

FERMILAB ENGINEERING NOTE	SECTION	PROJECT	SERIAL-CATEGORY	PAGE
	RD/MSD/MSG	KTeV	2.3.4 KUH	3

SUBJECT	NAME	
TARGET PILE LIFTING FIXTURE.	DAVE PUSHKA	
	DATE	REVISION DATE
	21 MARCH '95	

BOTTOM PLATE:

ASSUME SPAN IS 4 1/4", P = 40 KIPS

TRY 1 1/2" THK PLATE, 12" LONG.

$$M = \frac{Pl}{4} = \frac{(40\text{ KIPS})(4.25\text{ IN})}{4} = 42.5\text{ KIP}\cdot\text{IN}$$

$$I = \frac{1}{12}ab^3 = \frac{12''}{12}(1.5^3) = 3.375\text{ IN}^4$$

$$\sigma = \frac{My}{I} = \frac{(42.5\text{ KIP}\cdot\text{IN})(0.75)}{3.375\text{ IN}^4} = 9.4\text{ KSI} < 10\text{ KSI} \quad \text{OK}$$

MAKE BOTTOM PLATE 14" LONG TO ACCOMODATE THE 1" GAPS DUE TO THE BOLT HOLES.

SIDE PLATES:

IF PLATE LENGTH MATCHES THE BOTTOM PLATE LENGTH (14") AND THE REQ'D TENSILE AREA IS 4 IN² (SEE PG 2), AND EACH PLATE IS DESIGNED FOR 100% (40 KIPS) OF THE LOAD, THE PLATE THICKNESS REQ'D IS:

$$t_{MIN} = \frac{4\text{ IN}^2}{(14\text{ IN} - 3.5\text{ IN})} = 0.38\text{ IN}$$

IF THE DISTANCE ABOVE THE PIN IS 3", AND τ IS 10 KSI (SHEAR AREA = 4 IN²) – SEE PG 2, THE MIN. PL. THICKNESS IS:

$$t_{MIN} = \frac{4\text{ IN}^2}{(2)(3\text{ IN})} = 0.67\text{ IN}$$

∴ USE 3/4" THICK PLATE. THIS MAKES THE SPAN CALC'D ABOVE REDUCE FROM 4 1/4" TO 4" ∴ OK. ALSO, THE SPAN

587461

FERMILAB ENGINEERING NOTE	SECTION	PROJECT	SERIAL-CATEGORY	PAGE
	RD/MSD/MSG	KTeV	2.3.4 KUH	4

SUBJECT	NAME	
TARGET PILE LIFTING FIXTURE – WELDS.	D. PUSHKA	
	DATE 21 MAR '95	REVISION DATE

WELDS BETWEEN SIDE & BOTTOM PL'S:

P = 40 KIPS, FILLET WELD W/ E-7018

PER AISC, FILLET WELD STRENGTH = 0.928 KIPS/IN LENGTH/$\frac{1}{16}$ IN FILLET

MAKE THE WELD LENGTH EQUAL THE PL LENGTH, L = 14"

FIND D_{MIN}:

$$D_{MIN} = \frac{40 \text{ KIPS}}{(0.928 \text{ KIPS/IN}/\frac{1}{16})(14 \text{ IN})} = 3.07 \text{ /16ths OF A INCH.}$$

∴ THE MIN. WELD SIZE IS $3/16^{th}$ INCH. BUT SINCE BOTTOM PL > 3/4" THK, $5/16^{th}$ IS THE MIN. ALLOWABLE

USE A 5/8" FILLET ON THE OUTSIDE

TO PREVENT KNOTCH FAILURE FROM THE ROOT, PLACE A 5/16" WELD ON THE INSIDE @ THE ENDS OF THE SIDE PLATES.

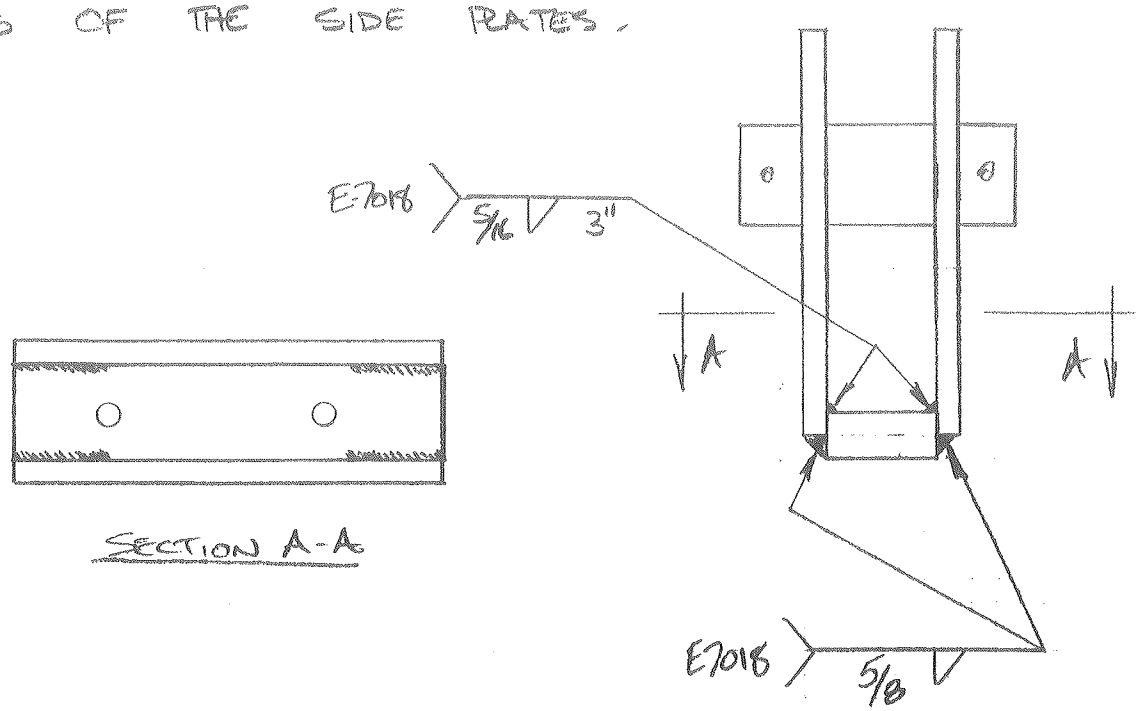

SECTION A-A

567461

FERMILAB
ENGINEERING NOTE

SECTION	PROJECT	SERIAL-CATEGORY	PAGE
RD/MED/MSG	KTeV	2.3.4 KUH	5

SUBJECT: TARGET PILE STEEL LIFT FIXTURE TESTING.

NAME: D. PUSHKA

DATE: 21 MARCH '95

REVISION DATE:

DESIGN LOAD = 40^k = 20 TONS

@125% OVERLOAD, TEST WT = 25 TONS = 50^k

PROCEDURE:

1) ASSEMBLE 25 TONS OF STEEL
2) TAP (2) 1"ø HOLES TO PLACE FIXTURE RIGHT OVER C.G.
3) BOLT FIXTURE TO STEEL.
4) LIFT 2" AND HOLD FOR 10 MINUTES.

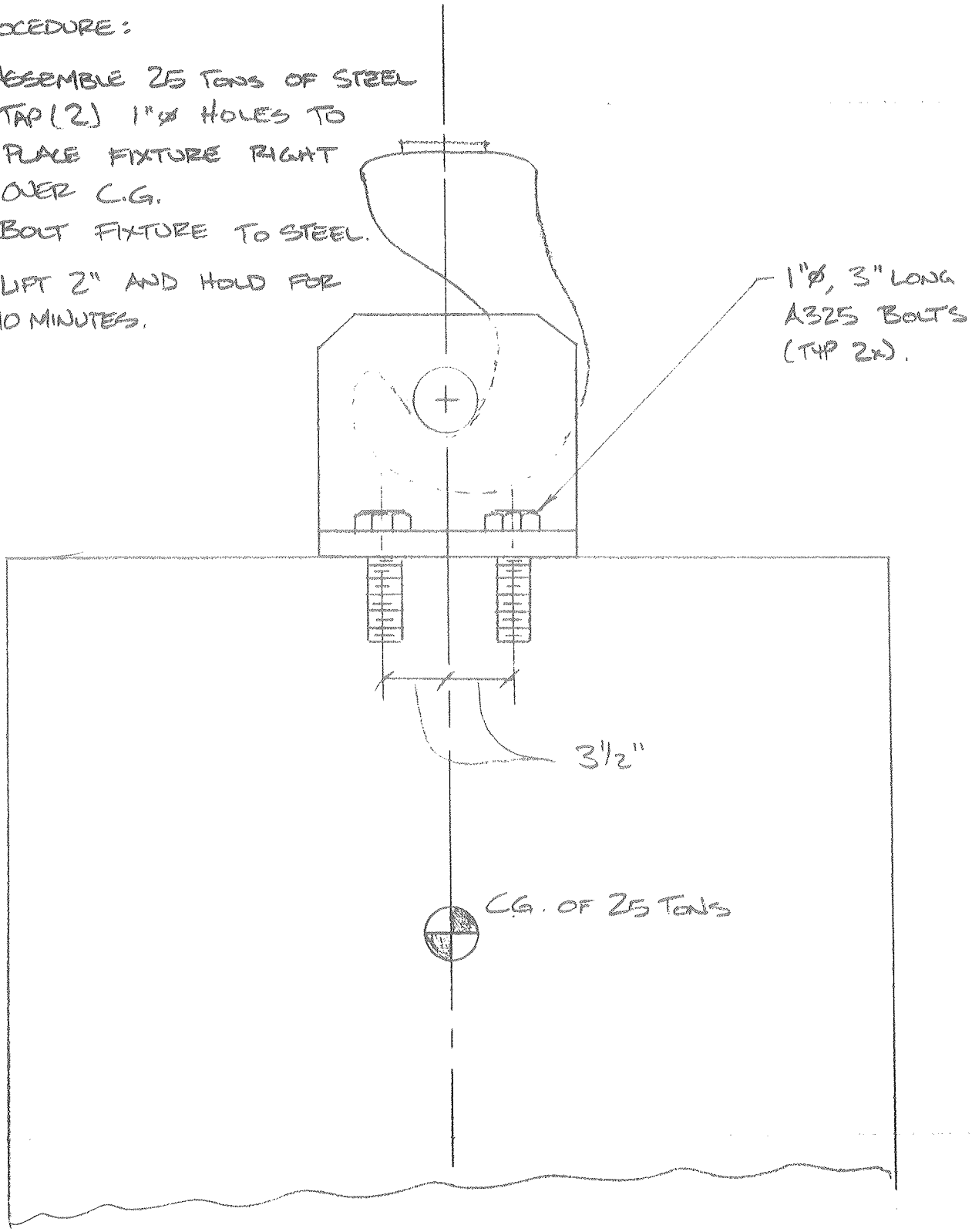

587461