Fermilab

Particle Physics Division

Mechanical Department Engineering Note

Number: MD-ENG-488 Date: 30OCT2013

Project: NOvA

Project Internal Reference:

Title: ND SOUTH BOOKEND, DRWG NO. 497212

Author(s): VILLEGAS

Reviewer(s): Ahee 12-12-2013

Key Words:

Abstract/Summary: MODIFICATIONS MADE TO AN EXISTING ASSEMBLY TABLE BY ADDING BRACING TUBES PINNED TO ANCHOR BRACKETS.

Applicable Codes: MANUAL OF STEEL CONSTRUCTION 9TH EDITION
MACHINERY'S HANDBOOK 25TH EDITION
WELDING CODE ANSI/AWS D1.1

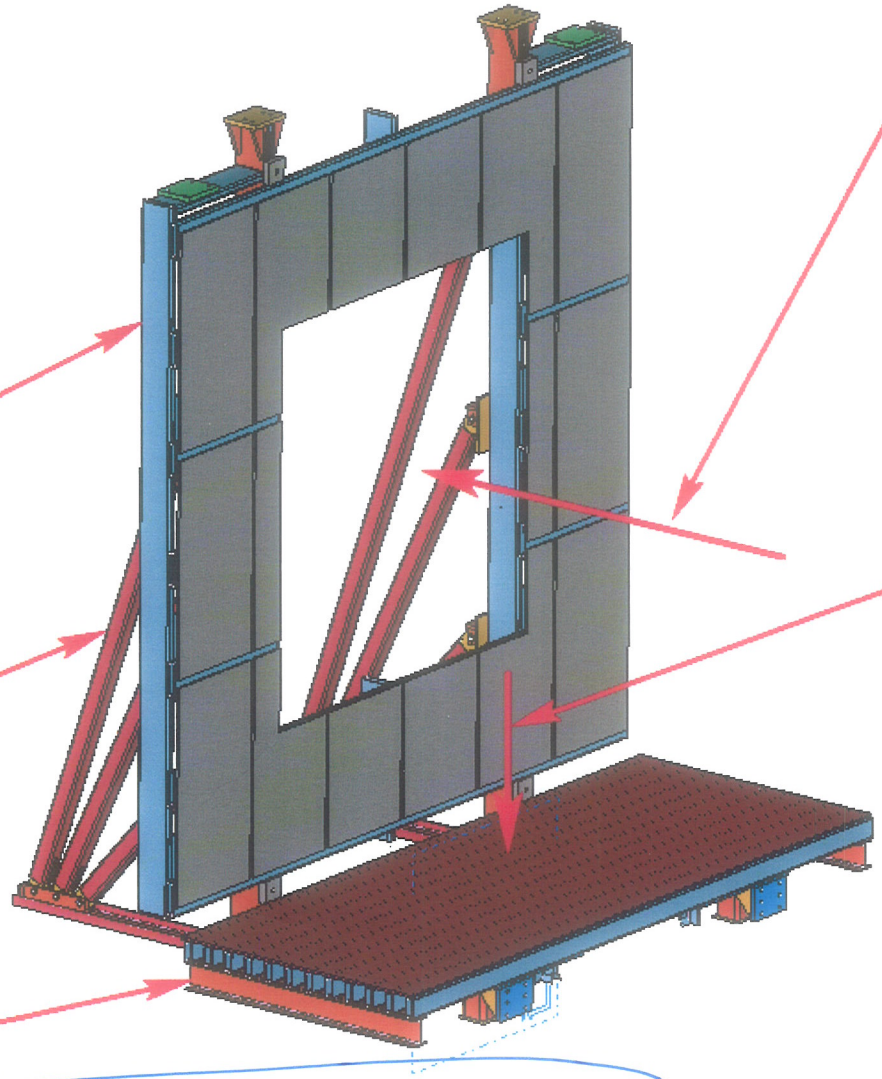

HORIZONTAL LOAD

BLOCK PVC----------19,800#
BLOCK SCINT.----------39,512
59,312#

WEIGHT DISTRIBUTED ON PANELED SURFACES USING 10% OF EIGHT BLOCK WEIGHT:
(59312# X 8 BLOCKS X 10%)/2000 = 23.7 TON

VERTICAL LOAD

BLOCK PVC + BLOCK SCINT. + PALLET
= 19800 + 39512 + 3577 = 62,889#
= 31.4 TON

VERTICAL FORCE REQUIRED TO SLIDE ENTIRE STRUCTURE OVER RUBBER CONTAINMENT:

TOTAL STRUCTURE WT =
VERT. LOAD + BRACING ASSY + TABLE =
62889 + 1043 + 3548 = 67,480#

COF OF STEEL ON RUBBER VARIES FROM 0.7 TO 4.0

USING COF OF 1.0, 1.0 X 67480 = 67480# = 33.7 TON > HORIZ LOAD 23.7 TON THEREFORE BOOKEND IS NOT EXPECTED TO SLIDE SOUTH.

SPREADER BAR	783#
TABLE TOP	1196
US TABLE FRAME	1216
MODIFIED ASSY TABLE	3548
PALLET	3577
BLOCK	19,800
	30,120#

ND SOUTH BOOKEND LOAD PLACEMENT PAGE #1

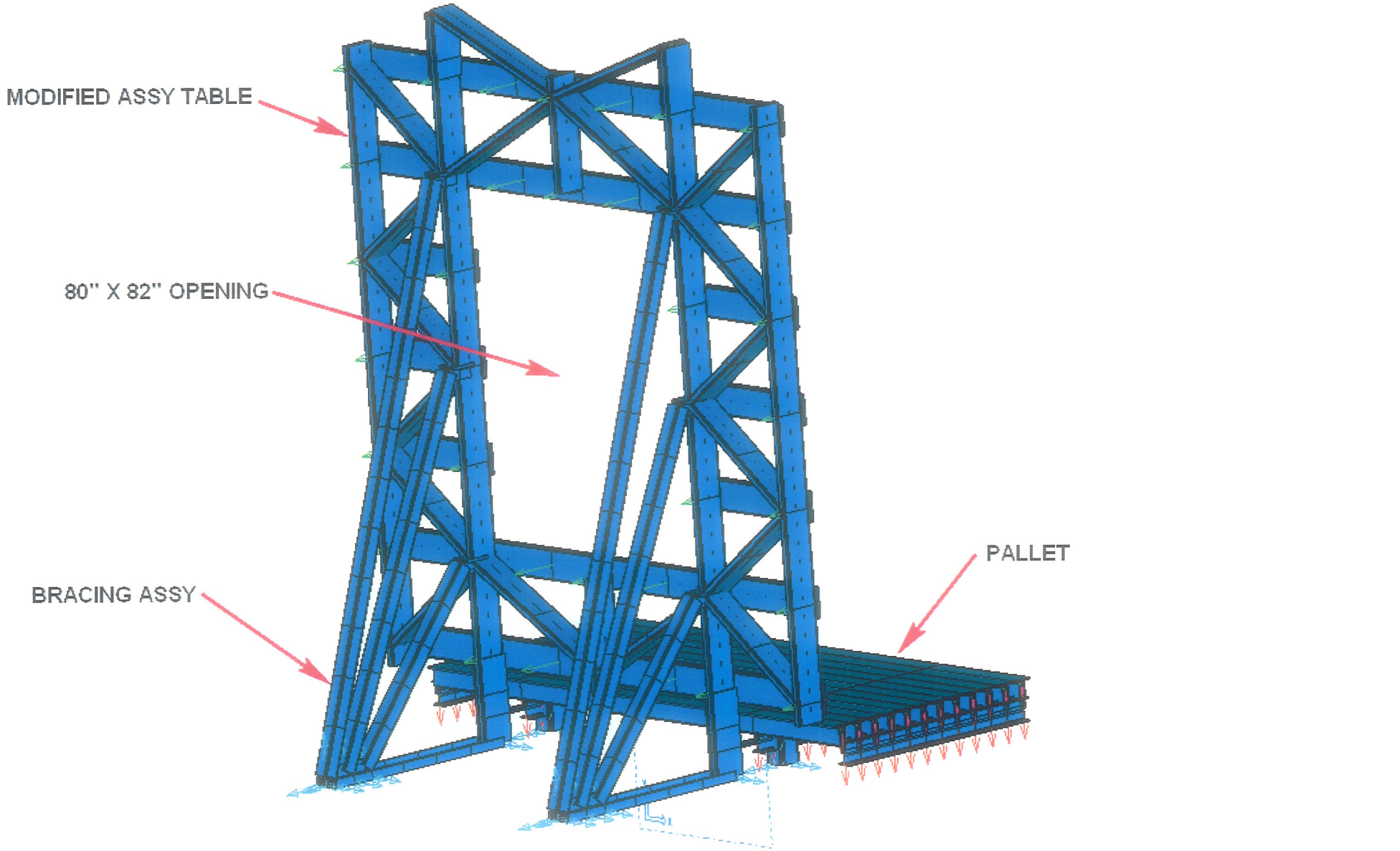

ND SOUTH BOOKEND
SHADED IMAGE OF 1D FEM
PAGE #2A

C:\PPD_IDM_PPD-117870\EMV_NOvA_ND_TABLE_FEA.mf1

RESULTS: 1- B.C. 1,DISPLACEMENT_1,LOAD SET 1
DISPLACEMENT - MAG MIN: 0.00E+00 MAX: 2.75E-01
DEFORMATION: 1- B.C. 1,DISPLACEMENT_1,LOAD SET 1
DISPLACEMENT - MAG MIN: 0.00E+00 MAX: 2.75E-01
FRAME OF REF: PART

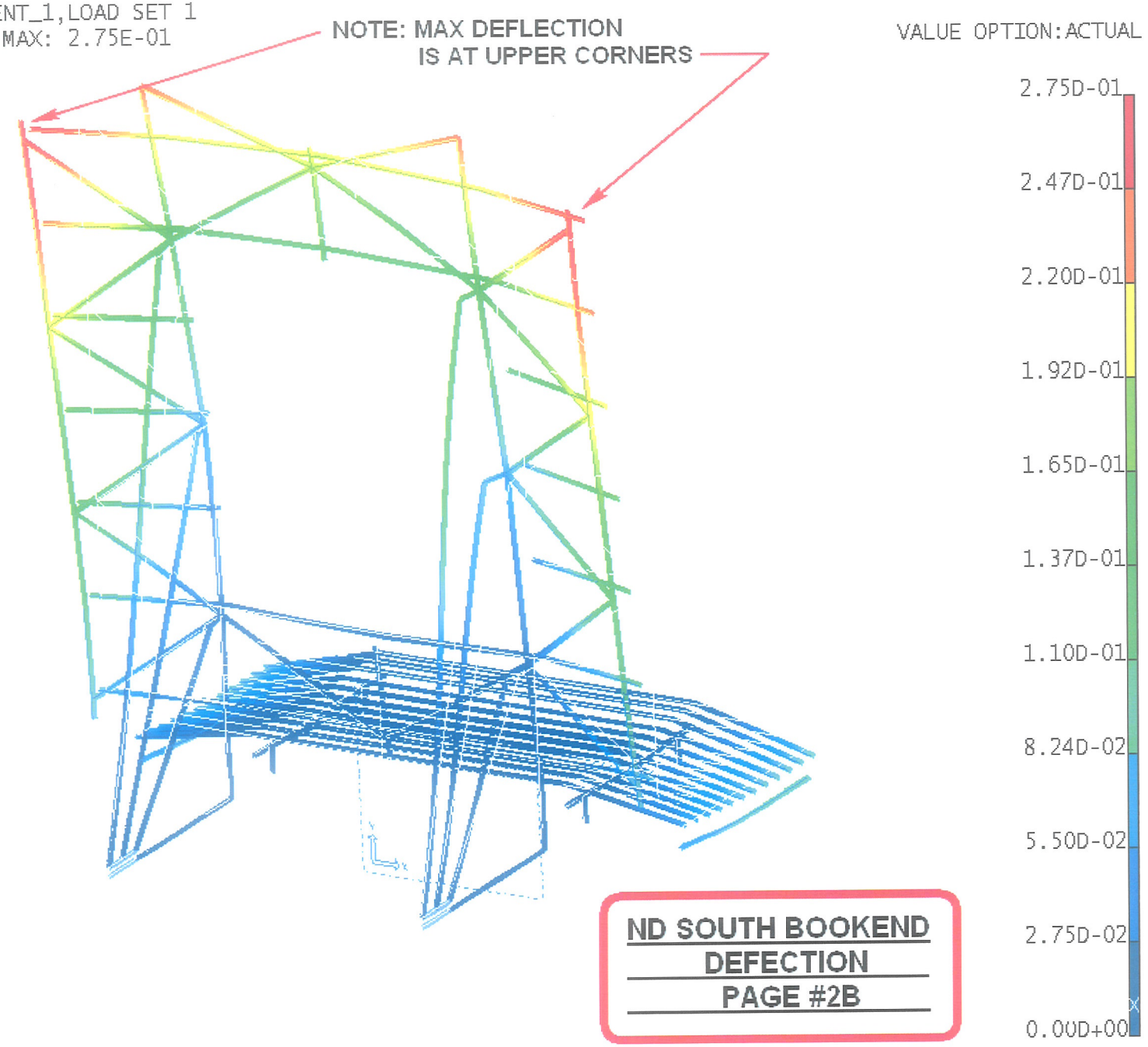

ND SOUTH BOOKEND
DEFECTION
PAGE #2B

I-DEAS 12 NX Series m4: I-DEAS Visualizer

ND_BOOKEND
24_TON_LOAD
ELEMENT FORCE Magnitude Averaged Top shell
Min: 0.00E+00 lbf Max: 7.63E+04 lbf
B.C. 1,DISPLACEMENT_1,LOAD SET 1
DISPLACEMENT XYZ Magnitude
Min: 0.00E+00 in Max: 2.75E-01 in
Part Coordinate System

AXIAL STRESS ON .25" X 4" X 4" ASTM 500 GR B TUBE
CROSS SECTIONAL AREA = 3.59

fa = 24,800/3.59 = 6,903 PSI DESIGN

Fa = 16,869 PSI ALLOWED

NOTE: ALLOWED STRESS IS FROM FROM PAGE 4

fa = 22,200/3.59 = 6,189 PSI DESIGN

MAX. AXIAL STRESS IS ON REINFORCED .25" X 2" X 8" X 20" LG ASTM 500 GR B TUBE WITH SECTIONAL AREA OF 12.6 SQ INCHES

fa = 76,300# / 12.6 = 6,056 PSI DESIGN

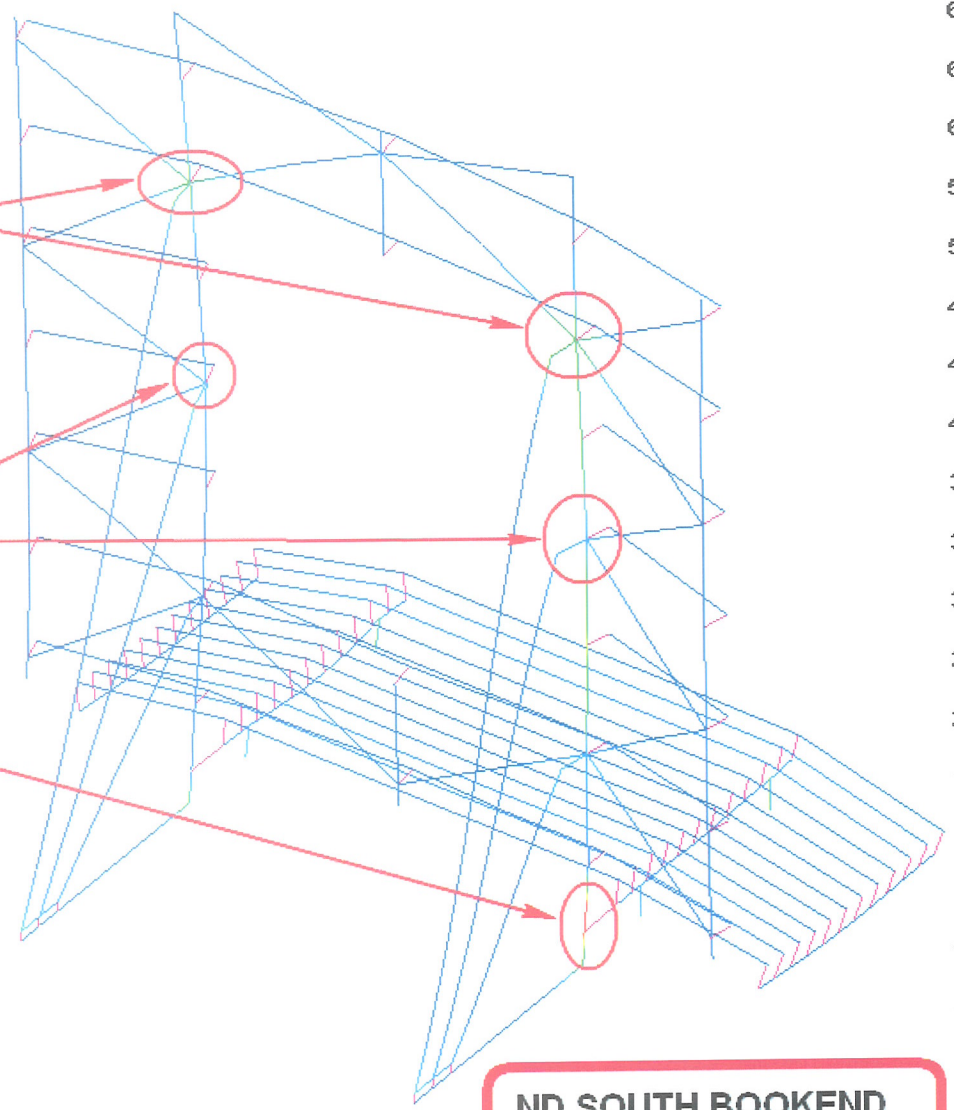

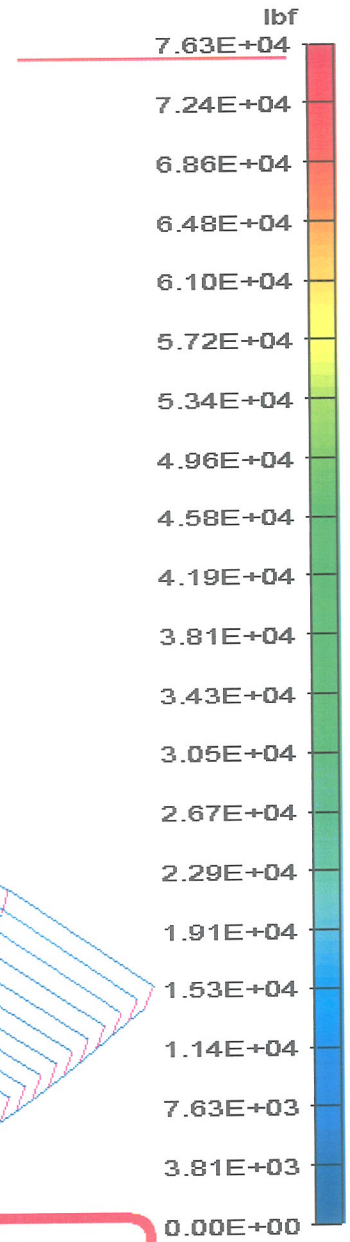

ND SOUTH BOOKEND
AXIAL STRESSES
PAGE #2C

I-DEAS 12 NX Series m4: I-DEAS Visualizer

ND_BOOKEND
24_TON_LOAD
ELEMENT FORCE Rotational Magnitude Averaged Top shell
Min: 0.00E+00 lbf.in Max: 2.11E+05 lbf.in
B.C. 1,DISPLACEMENT_1,LOAD SET 1
DISPLACEMENT XYZ Magnitude
Min: 0.00E+00 in Max: 2.75E-01 in
Part Coordinate System

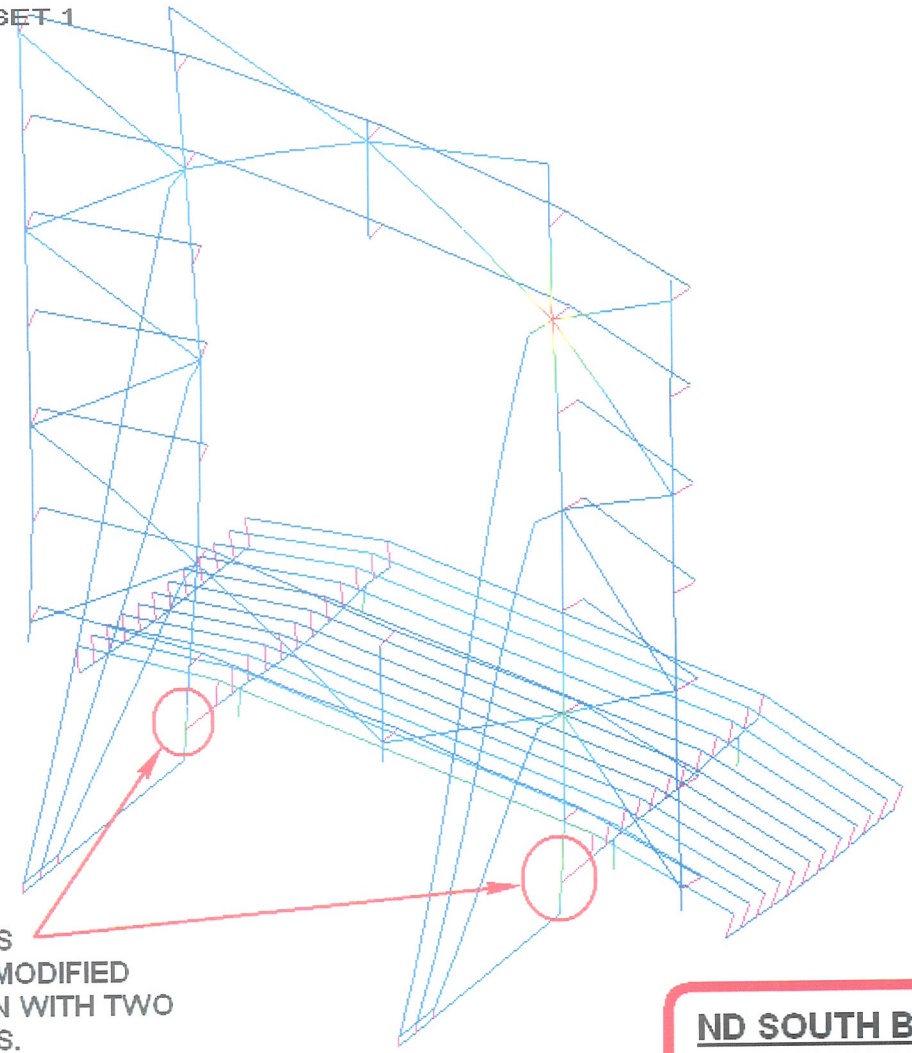

lbf.in
2.11E+05
2.01E+05
1.90E+05
1.80E+05
1.69E+05
1.58E+05
1.48E+05
1.37E+05
1.27E+05
1.16E+05
1.06E+05
9.51E+04
8.45E+04
7.39E+04
6.34E+04
5.28E+04
4.22E+04
3.17E+04
2.11E+04
1.06E+04
0.00E+00

MAX MOMENT OF 211K IN-LBS IS AT JUNCTION OF PALLET AND MODIFIED ASSY TABLE/BOOKEND FASTEN WITH TWO ROWS OF (3) 3/4-10 GR 8 BOLTS.

SEE PAGE #3 FOR BOLT SIZING

ND SOUTH BOOKEND
MAX MOMENT
PAGE #2D

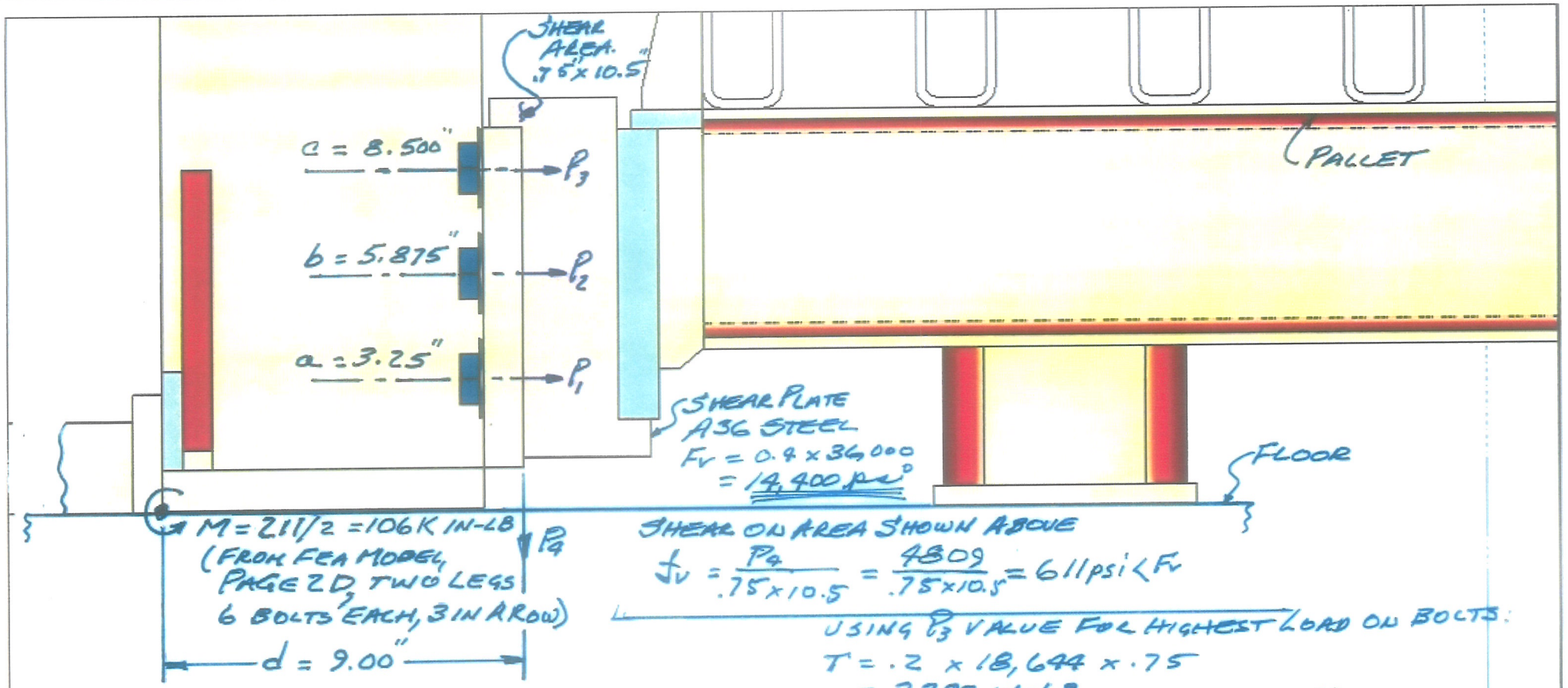

SHEAR ON AREA SHOWN ABOVE

$$f_v = \frac{P_4}{.75 \times 10.5} = \frac{4809}{.75 \times 10.5} = 611 \text{ psi} < F_v$$

USING P_3 VALUE FOR HIGHEST LOAD ON BOLTS:

$T = .2 \times 18{,}644 \times .75$
$= 2797$ IN-LB
$= 233$ FT-LB (TORQUE REQ'D)

SINCE THE TORQUE USED ON ALL BOLTS IS 330 FT-LB, THEN THE CLAMP LOAD ON EACH BOLT IS $P = 330 \times 12 / 2 \times .75$
$= 26{,}400\# > P_3$

$$M = aP_1 + bP_2 + cP_3 + dP_4$$

& $\frac{P_1}{a} = \frac{P_4}{d} \Rightarrow P_1 = \frac{a}{d}(P_4)$

$\frac{P_2}{b} = \frac{P_4}{d} \Rightarrow P_2 = \frac{b}{d}(P_4)$

$\frac{P_3}{c} = \frac{P_4}{d} \Rightarrow P_3 = \frac{c}{d}(P_4)$

$$M = 106 \times 10^3 = \frac{a^2}{d}(P_4) + \frac{b^2}{d}(P_4) + \frac{c^2}{d}(P_4) + d(P_4)$$
$$= 1.174(P_4) + 3.835(P_4) + 8.02(P_4) + 9(P_4)$$
$$= 22.04(P_4)$$

$P_4 = 4{,}809$ #
$P_3 = 4{,}542$ ← USE THIS VALUE FOR ALL BOLTS
$P_2 = 3{,}139$
$P_1 = 1{,}737$

ND SOUTH BOOKEND
BOLT SIZING
PAGE #3

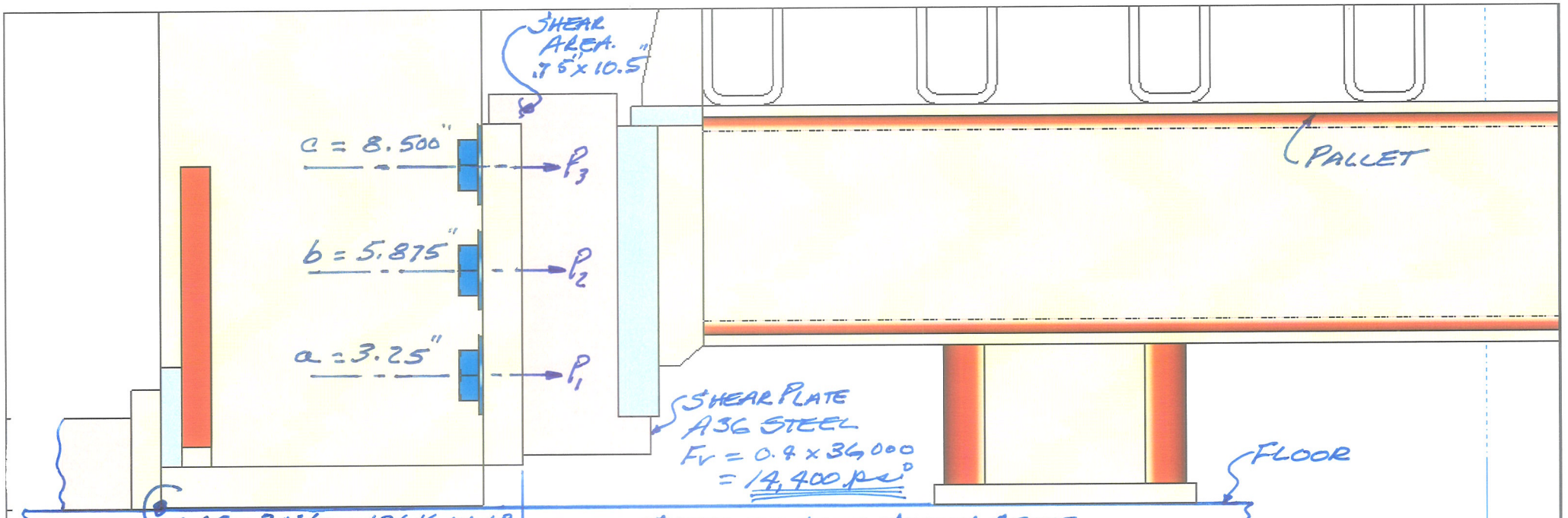

$M = 211/2 = 106K$ IN-LB
(FROM FEA MODEL, PAGE 2D, TWO LEGS 6 BOLTS EACH, 3 IN A ROW)

P_4

$d = 9.00''$

SHEAR ON AREA SHOWN ABOVE

$$f_v = \frac{P_4}{.75 \times 10.5} = \frac{4809}{.75 \times 10.5} = 611 \text{ psi} < F_v$$

USING P_3 VALUE FOR HIGHEST LOAD ON BOLTS:

$T = .2 \times 18{,}644 \times .75$
$= 2797$ IN-LB
$= 233$ FT-LB (TORQUE REQ'D)

$$M = aP_1 + bP_2 + cP_3 + dP_4$$

$$\& \ \frac{P_1}{a} = \frac{P_4}{d} \Rightarrow P_1 = \frac{a}{d}(P_4)$$

$$\frac{P_2}{b} = \frac{P_4}{d} \Rightarrow P_2 = \frac{b}{d}(P_4)$$

$$\frac{P_3}{c} = \frac{P_4}{d} \Rightarrow P_3 = \frac{c}{d}(P_4)$$

$$M = 106 \times 10^3 = \frac{a^2}{d}(P_4) + \frac{b^2}{d}(P_4) + \frac{c^2}{d}(P_4) + d(P_4)$$
$$= 1.174(P_4) + 3.835(P_4) + 8.021(P_4) + 9(P_4)$$
$$= 22.04(P_4)$$

$P_4 = 4809$ #
$P_3 = 4542$ ← USE THIS VALUE FOR ALL BOLTS
$P_2 = 3139$
$P_1 = 1737$

SINCE THE TORQUE USED ON ALL BOLTS IS 330 FT-LB, THEN THE CLAMP LOAD ON EACH BOLT IS $P = 330 \times 12 / .2 \times .75$
$= 26{,}400\# > P_3$

FERMILAB
ENGINEERING NOTE

SECTION | PROJECT | SERIAL-CATEGORY | PAGE #4

SUBJECT: ND SOUTH BOOKEND BRACING TUBE POTENTIAL BUCKLING ANALYSIS

NAME: Eric Allgyer

DATE: 28 Oct 2013 | REVISION DATE

END CONDITION
ROTATION — FREE
TRANSLATION — FIX
$K = 1.0$

NOTE: DESIGN VALUE OF 24,800# IS TAKEN FROM 1D FEA MODEL. PAGE # 2C

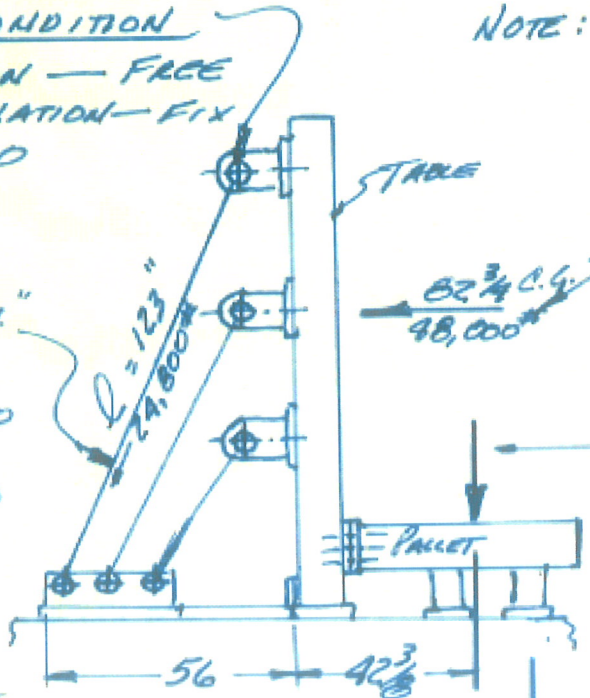

¼" x 4" x 4" SQ TUBE
ASTM A500 GR B
$F_Y = 46{,}000$ PSI
$r = 1.51$
$A = 3.59 \text{ in}^2$

LOADS DISTRIBUTED ON SURFACES

BLOCK	19,800
SCINT. OIL	39,512
PALLET	3,577
	62,889#

FROM MACHINERY HANDBOOK 25TH ED

$$Q = \frac{F_Y l^2}{K \pi^2 E} = \frac{46{,}000 \times 123^2}{1 \times \pi^2 \times 29 \times 10^6} = 2.431$$

SINCE $\frac{Q}{r^2} = 1.610 < 2$

$$P_{CR} = A F_Y \left(1 - \frac{Q}{4r^2}\right) = 121{,}123^{\#} \text{ (CRITICAL LOAD)}$$

RECOMMENDED SAFETY FACTOR
$F_S = 2$

$$F_a = \frac{P_{CR}}{F_S \times A} = \frac{121{,}123}{2 \times 3.59} = 16{,}869 \text{ psi ALLOWED}$$

FROM AISC MANUAL OF STEEL CONSTRUCTION 9TH ED

$$C_c = \sqrt{\frac{2\pi^2 E}{F_Y}} = \sqrt{\frac{2\pi^2 \times 29 \times 10^6}{46 \times 10^3}} = 111.6 > \frac{Kl}{r} = \frac{1 \times 123}{1.51} = 81.5$$

& SINCE
$Kl/r = 81.5 < 200$

THEN ALLOWED AXIAL STRESS:

$$F_a = \frac{\left[1 - \frac{(Kl/r)^2}{2C_c^2}\right] F_Y}{5/3 + \frac{3(Kl/r)}{8C_c} - \frac{(Kl/r)^3}{8C_c^3}} = 17{,}831 \text{ psi ALLOWED}$$

FROM FEA MODEL PAGE # 2C
DESIGN $f_a = 6903$ psi

FERMILAB
ENGINEERING NOTE

SECTION	PROJECT	SERIAL-CATEGORY	PAGE
			#4

SUBJECT: ND SOUTH BOOKEND BRACING TUBE POTENTIAL BUCKLING ANALYSIS

NAME: Eric Villegas

DATE: 28 Oct 2013

REVISION DATE:

END CONDITION
ROTATION — FREE
TRANSLATION — FIX
$K = 1.0$

NOTE: DESIGN VALUE OF 24,800# IS TAKEN FROM 1D FEA MODEL. PAGE # 2C

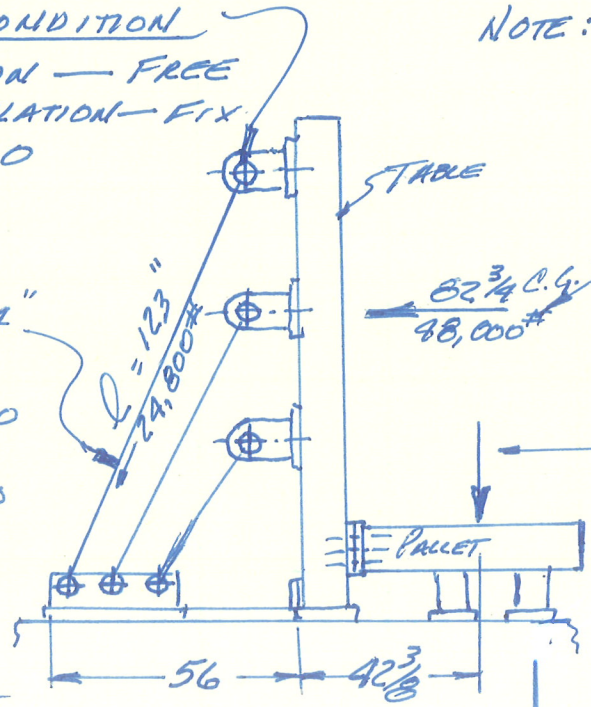

10% OF 8 BLOCK WT.

$\frac{1}{4}'' \times 4'' \times 4''$ SQ TUBE
ASTM A500 GR B
$F_Y = 46{,}000$ PSI
$r = 1.51$
$A = 3.59\ IN^2$

LOADS DISTRIBUTED ON SURFACES

BLOCK	19,800
SCINT. OIL	39,512
PALLET	3,577
	62,889#

FROM MACHINERY HANDBOOK 25TH Ed

$$Q = \frac{F_Y l^2}{K \pi^2 E} = \frac{46{,}000 \times 123^2}{1 \times \pi^2 \times 29 \times 10^6} = 2.431$$

SINCE $\frac{Q}{r^2} = 1.610 < 2$

$$P_{CR} = A F_Y \left(1 - \frac{Q}{4r^2}\right) = 121{,}123\# \text{ (CRITICAL LOAD)}$$

RECOMMENDED SAFETY FACTOR
$F_S = 2$

$$F_a = \frac{P_{CR}}{F_S \times A} = \frac{121{,}123}{2 \times 3.59} = 16{,}869 \text{ psi ALLOWED}$$

FROM AISC MANUAL OF STEEL CONSTRUCTION 9TH Ed

$$C_c = \sqrt{\frac{2\pi^2 E}{F_Y}} = \sqrt{\frac{2\pi^2 \times 29 \times 10^6}{46 \times 10^3}} = 111.6 > \frac{Kl}{r} = \frac{1 \times 123}{1.51} = 81.5$$

& SINCE
$Kl/r = 81.5 < 200$

THEN ALLOWED AXIAL STRESS:

$$F_a = \frac{\left[1 - \frac{(Kl/r)^2}{2C_c^2}\right] F_Y}{5/3 + \frac{3(Kl/r)}{8C_c} - \frac{(Kl/r)^3}{8C_c^3}} = 17{,}831 \text{ psi ALLOWED}$$

FROM FEA MODEL PAGE # 2C
DESIGN $f_a = 6{,}903$ psi

I-DEAS 12 NX Series m4: PPD TDM : 1_MODELFILES : C:\PPD_IDM_PPD-117870\EMV_NOvA_ND_TABLE_FEA.mf1

NOTE:

1) FROM PAGE # 2C MAX. FORCE ON EACH JOINT IS 24,800#

2) USE 1/4" WELDS FOR ALL CONSTRUCTION

3) WELD METAL: E70XX

Fw = SIN45(.25)72,000 X 0.3 =3,818 #/IN
DESIGN

4) MINIMUM WELD LENGTH REQUIRED FOR ALL WELDED CONNECTIONS:
Lw = 24800/3818 = 6.5"

FOR SYMMETRY ALL WELDS WILL WILL EXCEED THIS VALUE

5) STRUCTURE RESTS FREE ON RUBBER CONTAINMENT/PADS

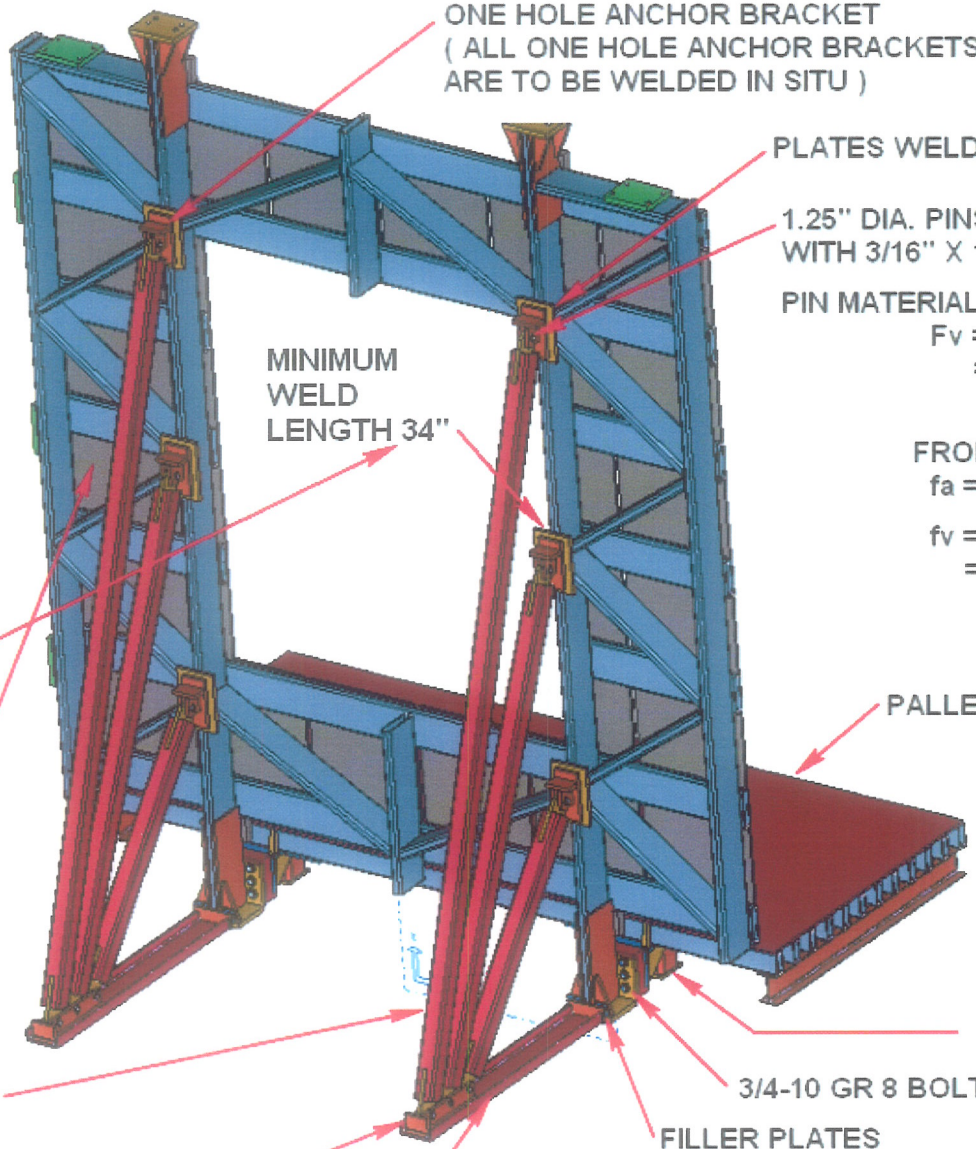

ND SOUTH BOOKEND
PINS & WELDS
PAGE #5