LIFTING DEVICE

DEVICE NAME: Lifting Fixture : Coil, KTeV Analysis Magnet

ENGINEERING NOTE NUMBER: MSD - EN - 2.5.4.5 - KTeV

DRAWING NUMBER:

APPLICABLE STANDARD: AISC, ANSI, ASME B30.20 - 1993

RATED LOAD: ~~12,000 lbs~~ 12,320 lbs

TEST LOAD: ~~15,000 lbs~~ 15,400 lbs

TEST LOAD PERCENT: 125%

LAST LOAD TEST DATE: 3/14/95, MAB

COLOR: Yellow

STRESS CALCULATIONS:

Done by: Don Mitchell / Fred Renken

Date: 8/4/94 — 2/15/95

Reviewed by: [illegible]

Date: 2/22/95

REMARKS:

IDENTIFICATION:

Engineering Note Number & Rated Load Must be Clearly Marked On a Conspicuous Surface.

Fermilab

MECHANICAL SUPPORT DEPARTMENT
ENGINEERING NOTE

NUMBER: **MSD EN-2.5.4.5-KTeV** DATE: 2/16/95

TITLE: **KTeV Analysis Magnet: Coil Lifting Fixture**

AUTHOR(s): Don Mitchell with bracket design by Fred Renken

REVIEWER: Ang Lee

KEY WORDS: KTeV, Analysis Magnet, Spectrometer Magnet, Coils, Lifting Fixture

ABSTRACT/SUMMARY:

This note contains the calculations for the analysis magnet lifting fixture. The coils are large and weigh approximately 5.5 tons each and are placed into a steel yoke with the use of this fixture. The fixture consists of four brackets and a spreader bar and meets ANSI standards, AISC standards, and ASME B30.20-1993 Below the Hook Lifting Fixture standards. Three areas are presented in this design: (1). The coil lifting bracket is analyzed for stress and welds are sized, (2). The spreader bar is analyzed for stress, (3). The lifting lugs on the spreader bar are analyzed for stresses and welds are sized. The design requires the use of eight shackles and slings. This fixture has been entered into volume three of Fermilab's lifting fixture documentation as Item # 71 with a rated load of 12,000 Lbs.

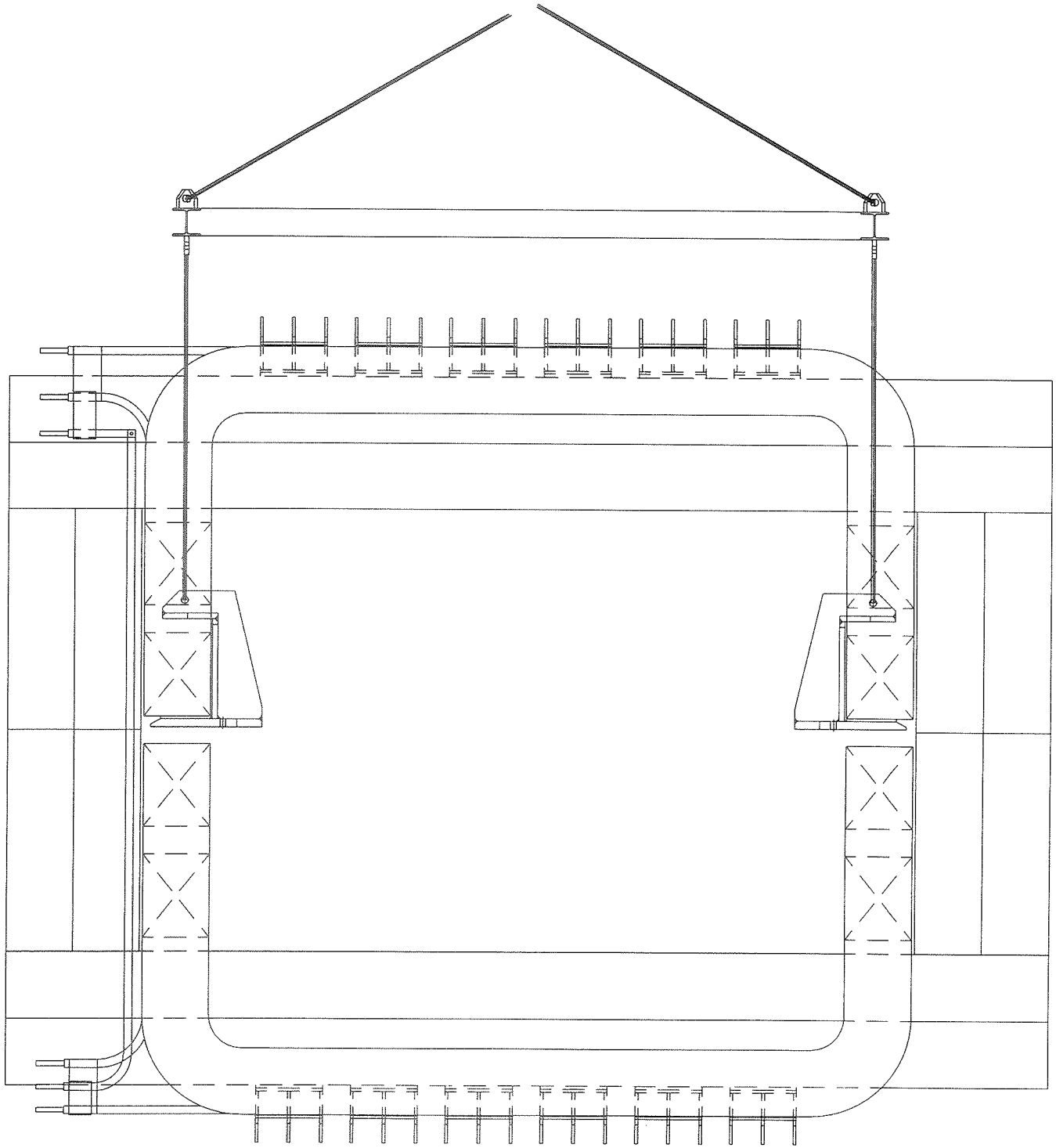

Plotted Thu Feb 16 13:56:43 CST 1995 by dmitchel

SDRC I-DEAS VI.1(s): Solid_Modeling

25-JUL-94 11:09:08

Database: Coil Lift on analysis magnet lifting fixture

View : No stored View

Task: Assembly

System: No stored System

Units : IN

Display : No stored Option

Dim: 1-MRIB

Update Level: Full

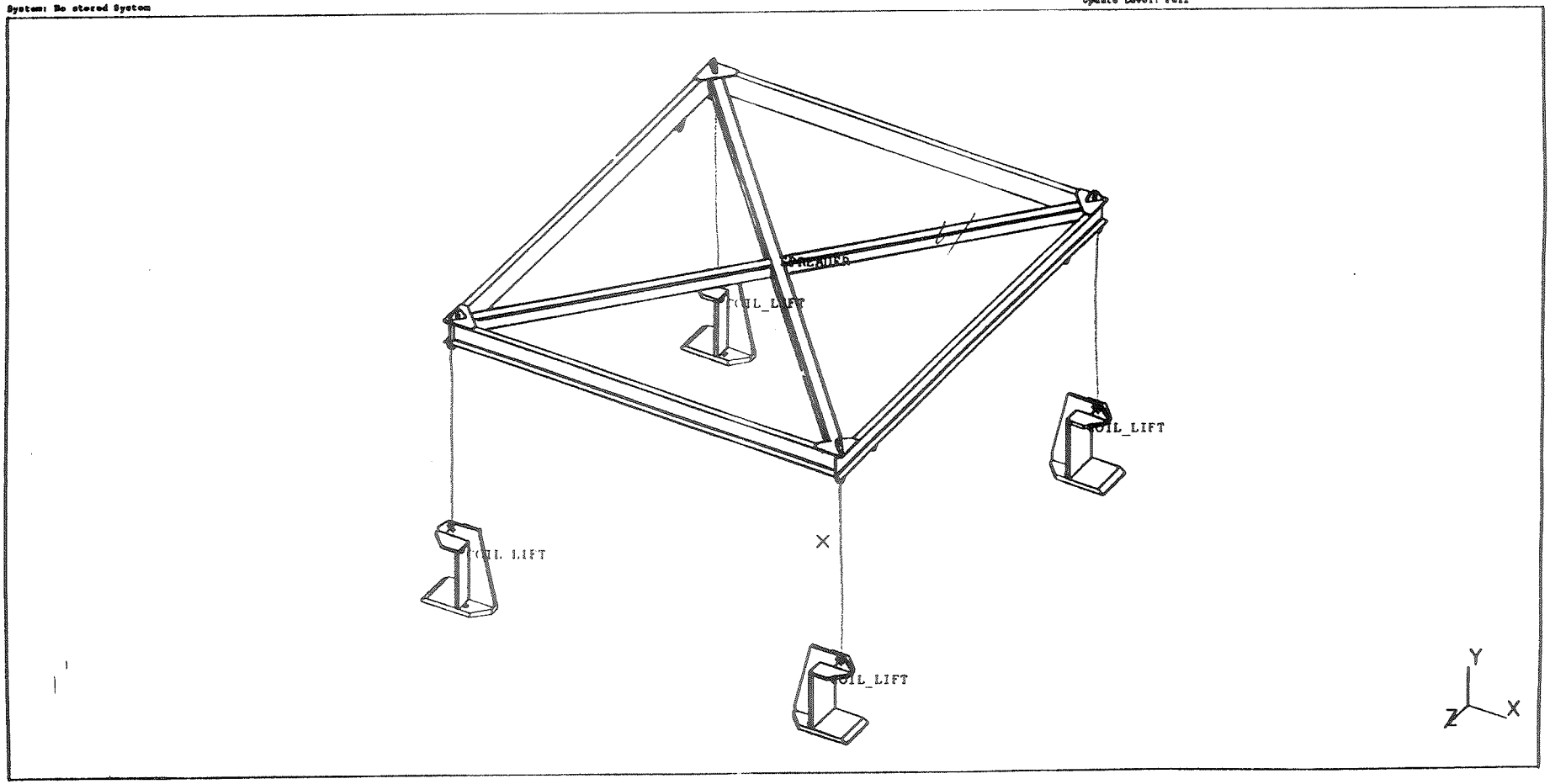

FERMILAB
ENGINEERING NOTE

SECTION	PROJECT	SERIAL-CATEGORY	PAGE
RD / MSD	KTeV Analysis Magnet		

SUBJECT: KTeV Analysis Magnet : Lifting Bracket

NAME: D. Mitchell

DATE: 2/16/95

REVISION DATE:

The lifting bracket will be analyzed in four areas as indicated on the attached isometric drawing.

Area I: Weld calculations on the "T" shaped weld.

Area II: Stresses and deflections in the main support gusset.

Area III: Shear and bending stresses on the bottom cantilevered plate.

Area IV: Bearing and shear stresses on the lifting hole.

Area I:

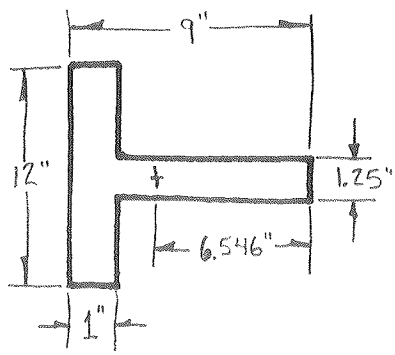

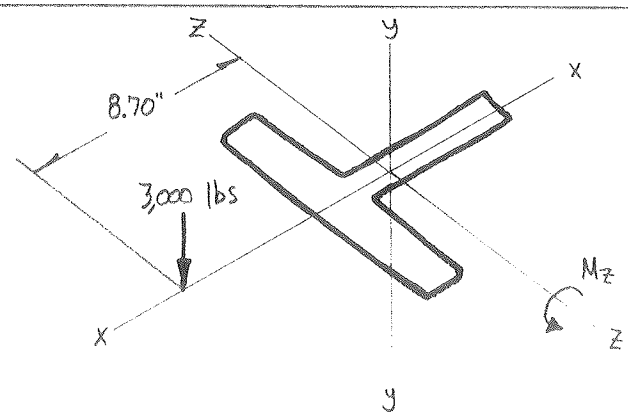

Weld length = 42 in

Moment of Inertia of the line weld = I_z = 345.45 in^3

$M_z = (3{,}000 \text{ lbs})(8.70'') = 26{,}100$ in-lbs

$C = 6.546''$

$$\sigma_b = \frac{Mc}{I} = \frac{(26{,}100 \text{ in-lbs})(6.546 \text{ in})}{345.45 \text{ in}^3} = 495 \text{ lbs/in}$$

$$\tau_y = \frac{3{,}000 \text{ lbs}}{42 \text{ in}} = 71.4 \text{ lbs/in}$$

$P_{total} = 566$ lbs/in $\therefore$ The 1/2" fillet weld is more than ample.

Database: Coil Lift on analysis magnet lifting fixture
View : none, none
Task: Object
Object: 1-WORK1, Workbench

Units : IN
Display : none, none
Bin: 1-MAIN
Update Level: Full

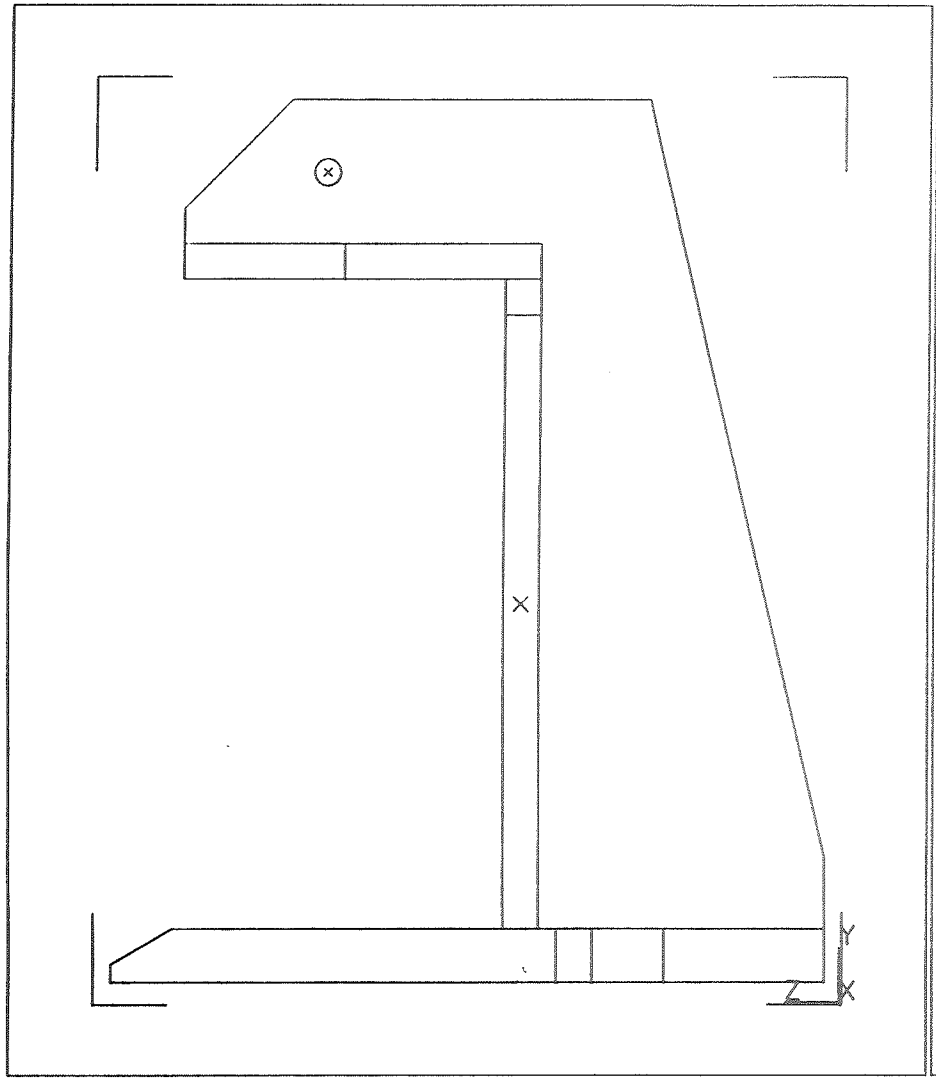

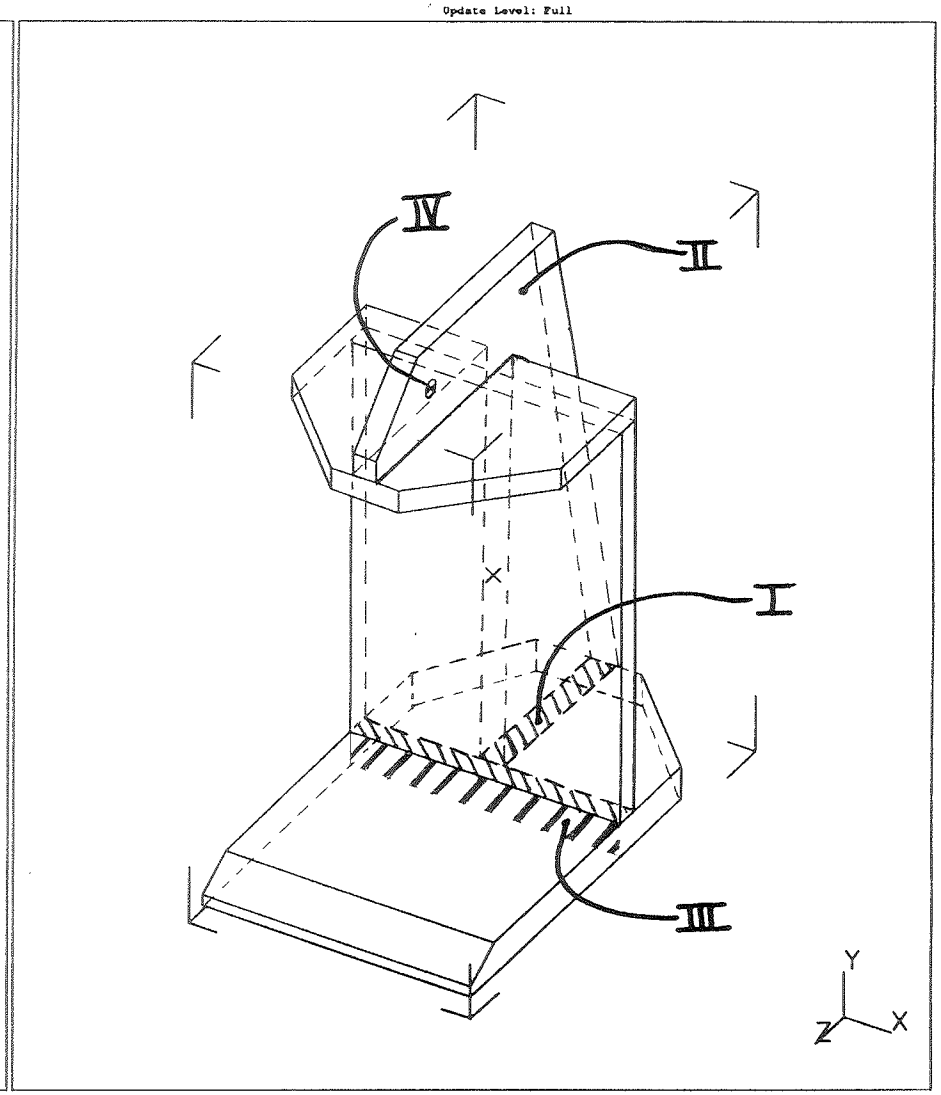

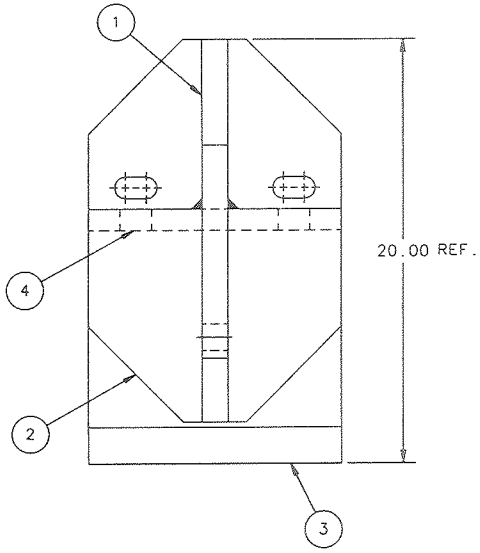

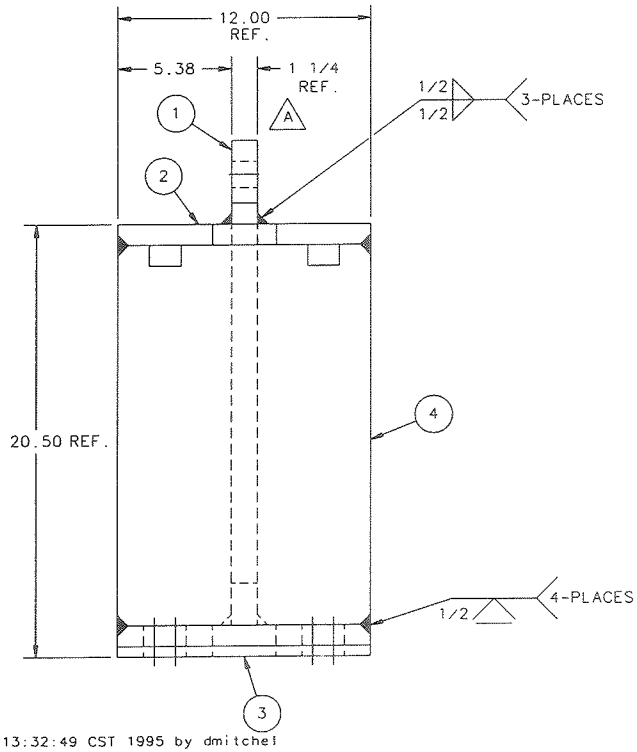

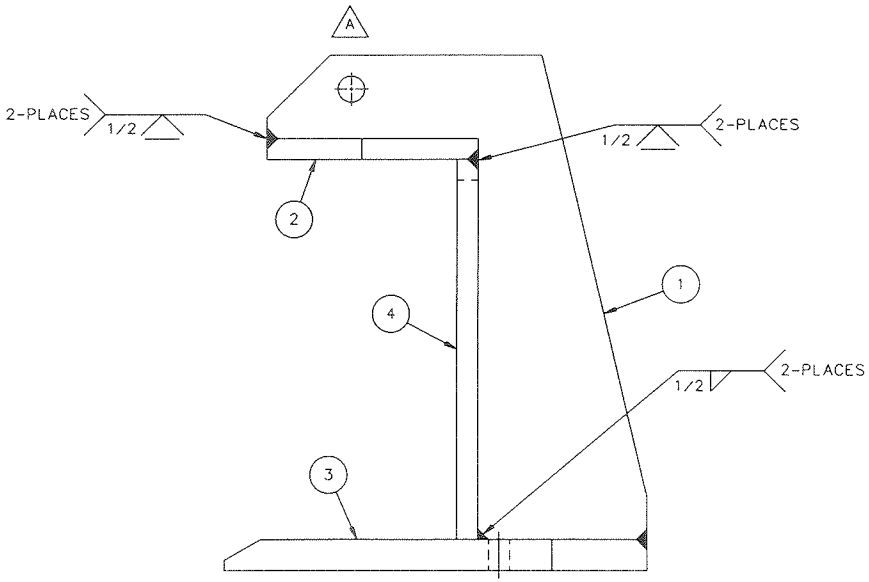

Plotted Thu Feb 16 13:32:49 CST 1995 by dmitchel

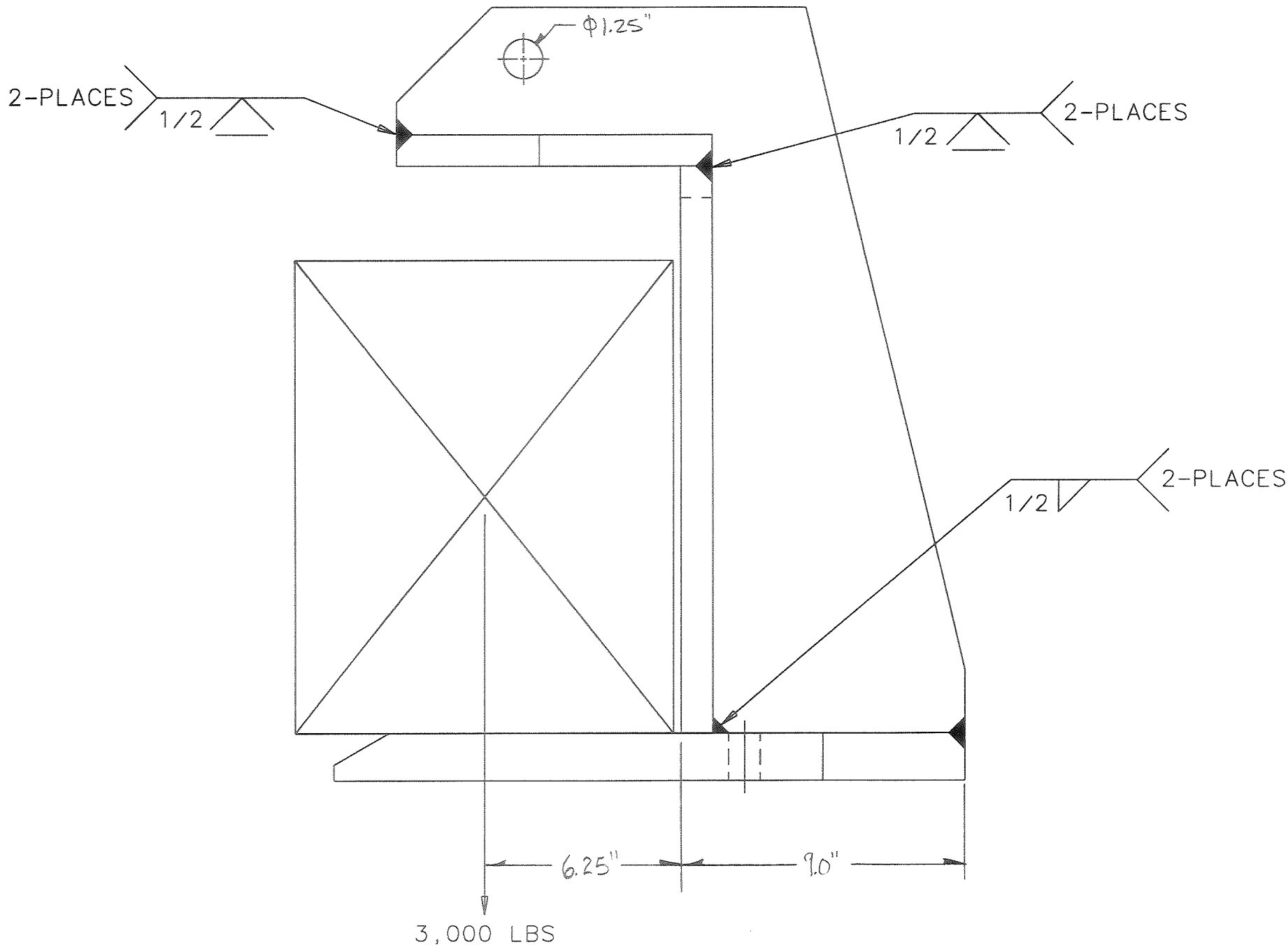

Plotted Wed Feb 15 15:48:25 CST 1995 by dmitchel

FERMILAB ENGINEERING NOTE	SECTION RD/MSD	PROJECT KTeV Analysis Magnet	SERIAL-CATEGORY	PAGE
SUBJECT KTeV Analysis Magnet: Lifting Bracket		NAME D. Mitchell		
		DATE 2/16/95	REVISION DATE	

Area II:

The main support gusset was analyzed using FEA techniques. I-DEAS was implemented to solve this thin shell problem. The 1018 C.R Steel plate is 1 1/4 inch thick, restrained along the bottom edge with a 3,000 lb load acting through the center of the pick point. The lifting hole is ignored for this analysis.

The maximum deflection was found to be .0095 in.

The maximum stress (Von mises) was found to be 15,400 psi which is above the allowable stress of 10,000 psi but this stress is VERY localized at a point that is actually reinforced by another welded-in plate. This reinforced area was not modeled and therefore, this larger stress will be ignored.

A more realistic stress in this plate is about 6,000 psi (Von Mise's Stress) which is below the allowable 10,000 psi

The following pictures sum up these findings.

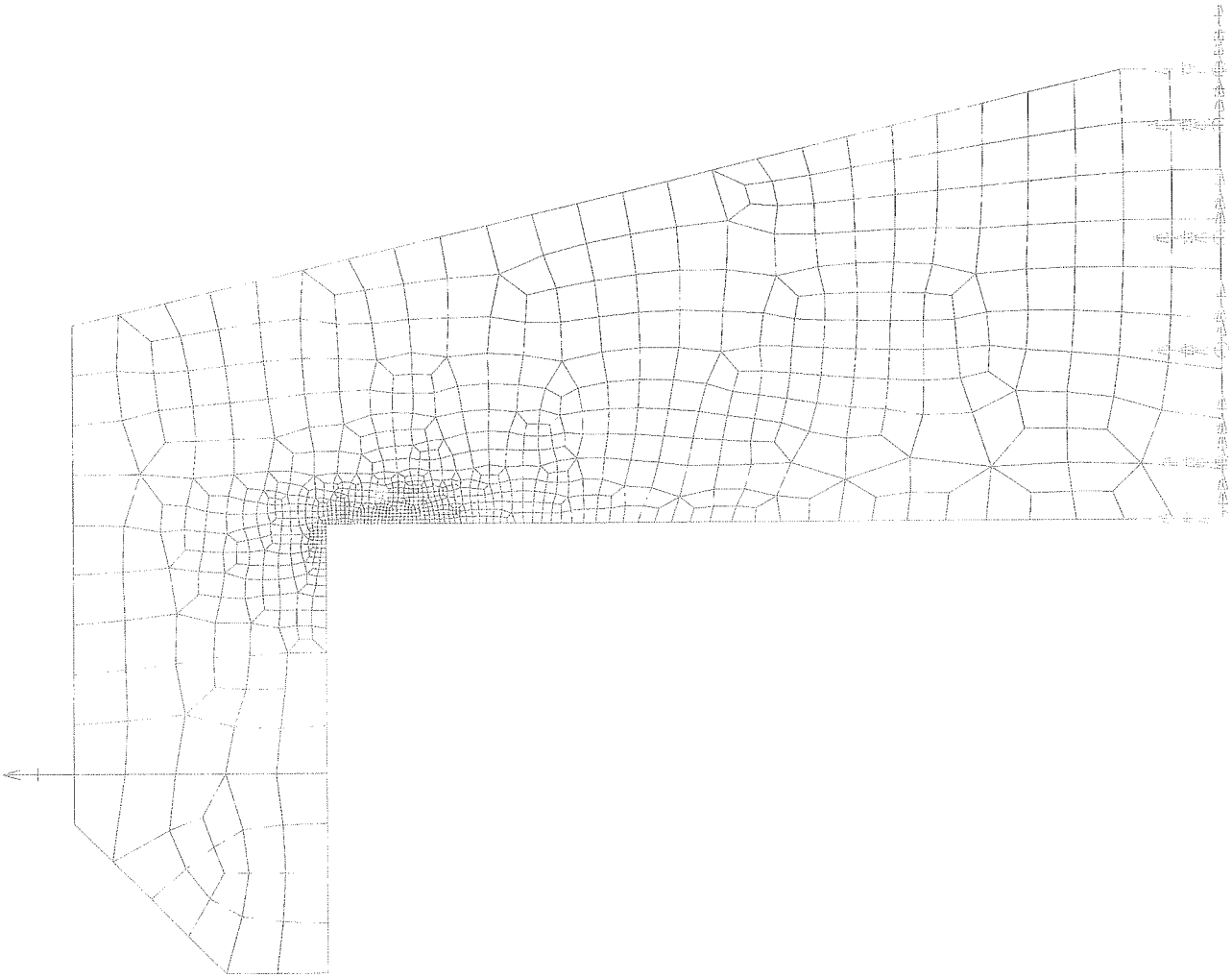

/rdmd_local/v02_1/ms_dmitchel/magnet_lifting_fixture.mf1

RESULTS: 2- B.C. 1,LOAD 1,STRESS_2
STRESS - VON MISES MIN: 1.00E+01 MAX: 1.54E+04
DEFORMATION: 1- B.C. 1,LOAD 1,DISPLACEMENT_1
DISPLACEMENT - MAG MIN: 0.00E+00 MAX: 9.45E-03
FRAME OF REF: PART

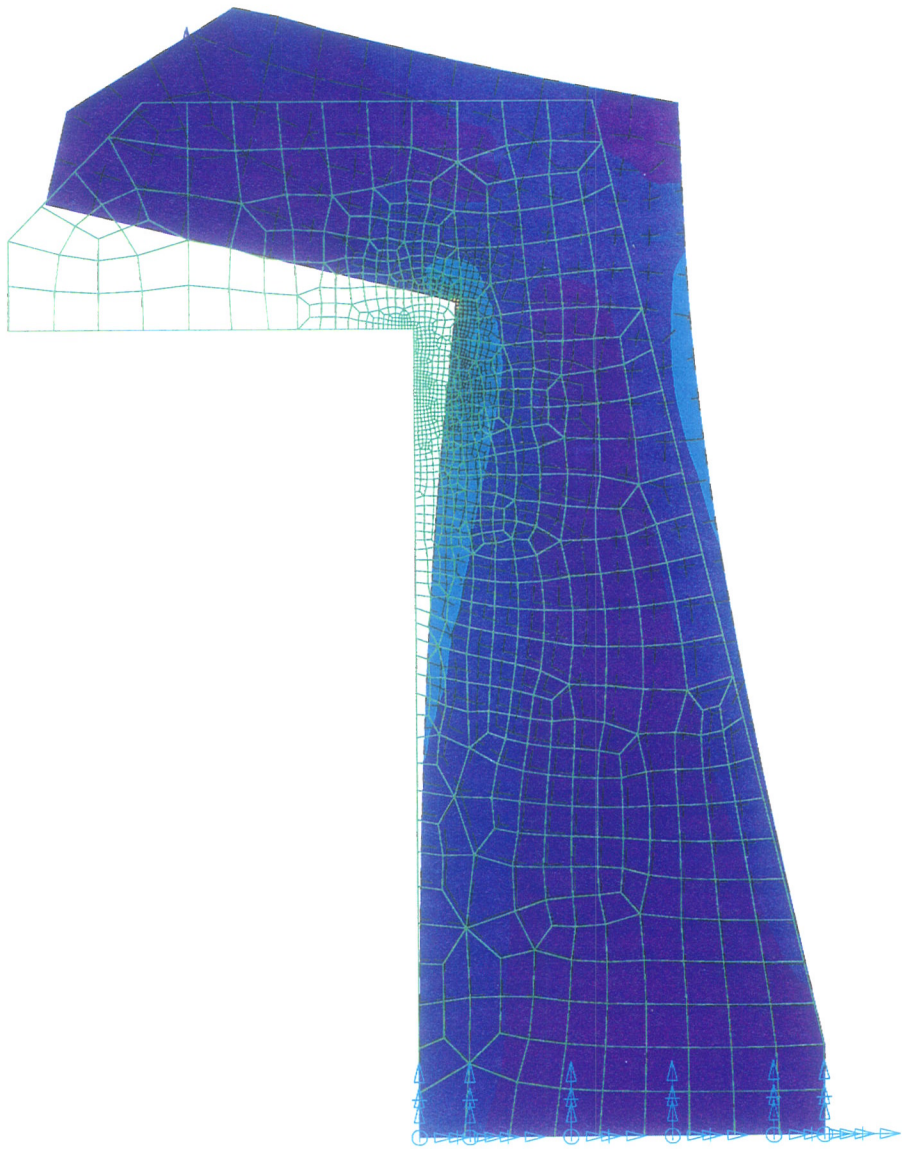

VALUE OPTION:ACTUAL
SHELL SURFACE: TOP

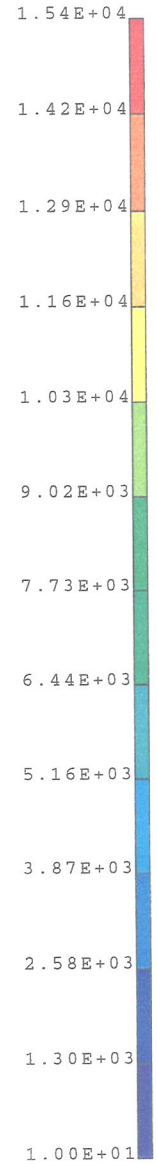

/rdmd_local/v02_1/ms_dmitchel/magnet_lifting_fixture.mf1

RESULTS: 2- B.C. 1,LOAD 1,STRESS_2
STRESS - VON MISES MIN: 1.74E+03 MAX: 1.54E+04
DEFORMATION: 1- B.C. 1,LOAD 1,DISPLACEMENT_1
DISPLACEMENT - MAG MIN: 2.94E-03 MAX: 4.16E-03
FRAME OF REF: PART

VALUE OPTION:ACTUAL
SHELL SURFACE: TOP

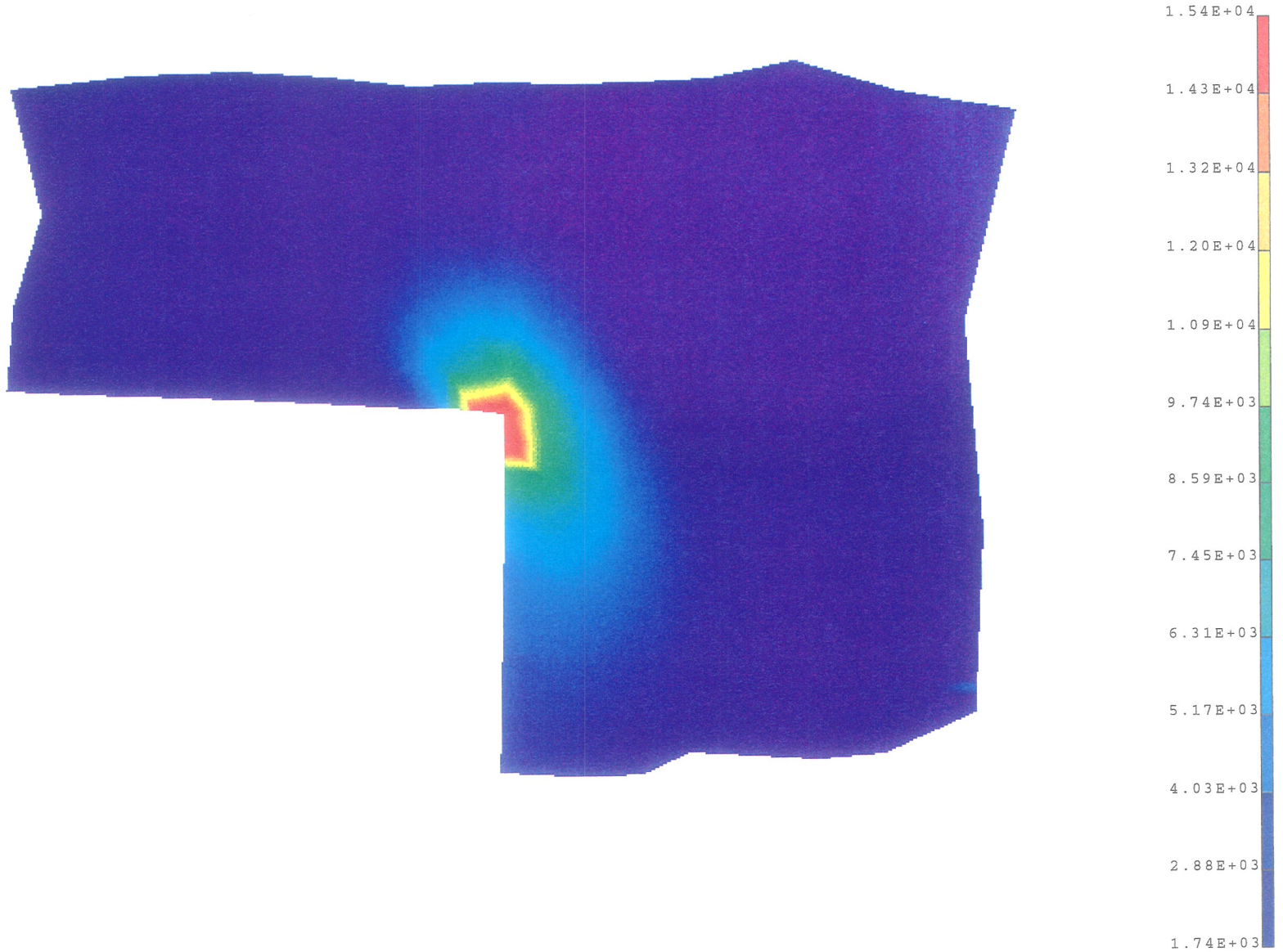

/rdmd_local/v02_1/ms_dmitchel/magnet_lifting_fixture.mf1

RESULTS: 1- B.C. 1,LOAD 1,DISPLACEMENT_1
DISPLACEMENT - MAG MIN: 0.00E+00 MAX: 9.45E-03
DEFORMATION: 1- B.C. 1,LOAD 1,DISPLACEMENT_1
DISPLACEMENT - MAG MIN: 0.00E+00 MAX: 9.45E-03
FRAME OF REF: PART

AREA II: Continued

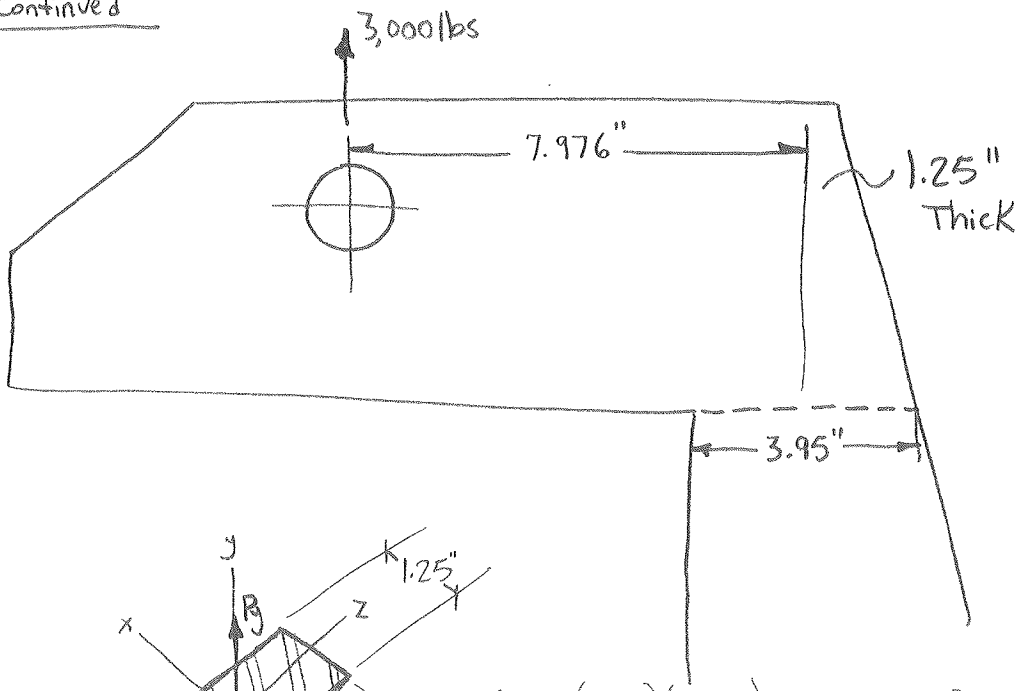

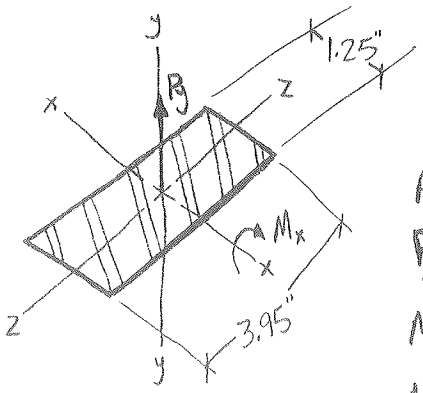

$Area = (3.95)(1.25) = 4.938\ in^2$

$P_y = 3,000\ lbs$

$M_x = Fd = (3,000\ lbs)(7.976")$

$M_x = 23,928\ in\text{-}lb$

$I_x = \frac{1}{12} bh^3 = 1/12(1.25)(3.95^3)$

$I_x = 6.42\ in^4$

$c = 3.95/2 = 1.975\ in$

$\sigma_b = \frac{M_x c}{I_x} = \frac{(23,928)(1.975)}{6.42} = 7,361\ psi$ OK

$\sigma_b < F_a$ OK

$\sigma_y = \frac{P_y}{A} = \frac{3,000\ lbs}{4.938\ in^2} = 607.6\ psi$

$\sigma_y < F_a$ OK

1018 C.R. Steel

$F_y = 30,000\ psi$

$F_a = \frac{1}{3} F_y = 10,000\ psi$

$\frac{\sigma_y}{F_a} + \frac{\sigma_b}{F_a} \leq 1.0$?

$\frac{607.6}{10,000} + \frac{7,361}{10,000} = .797 \leq 1.0$ OK

FERMILAB
ENGINEERING NOTE

SECTION	PROJECT	SERIAL-CATEGORY	PAGE
Physics	[illegible]		

SUBJECT: KEK Analysis Magnet: Lifting Bracket

NAME: L. Mitchell

DATE: 2/16/95

REVISION DATE:

Area III:

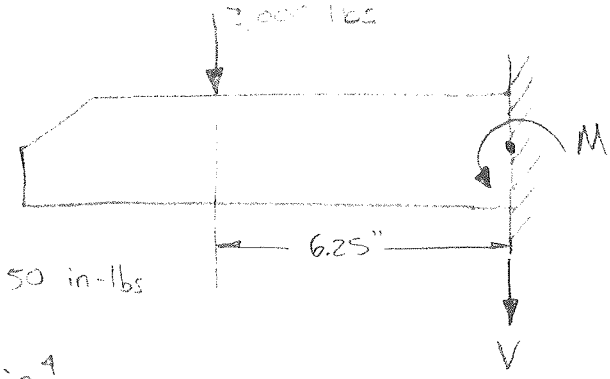

Bending Stress:

$M = (3{,}000\ \text{lbs})(6.25\ \text{in}) = 18{,}750\ \text{in-lbs}$

$I = \left(\frac{1}{12}\right)(12)(1.5)^3 = 3.375\ \text{in}^4$

$c = .75''$

$\sigma_b = \frac{Mc}{I} = \frac{(18{,}750)(.75)}{3.375} = 4{,}167\ \text{psi}$ $\quad F_a = 10{,}000\ \text{psi}$

$\sigma_b < F_a \therefore$ OK

Shear Stress:

$V = 3{,}000\ \text{lbs}$

$\tau = \frac{3}{2}\frac{V}{A} = \left(\frac{3}{2}\right)\left(\frac{3{,}000}{18\ \text{in}^2}\right) = 250\ \text{psi}$ $\quad \tau_{all} = 5{,}000\ \text{psi}$

$\tau < \tau_{all} \therefore$ OK

FERMILAB ENGINEERING NOTE	SECTION	PROJECT	SERIAL-CATEGORY	PAGE
	PE/MSD	KEK Analog Magnet		

SUBJECT	NAME	
Bearing and Shear stress at lifting pin	D. Mitchell	
	DATE 2/16/95	REVISION DATE

Area IV:

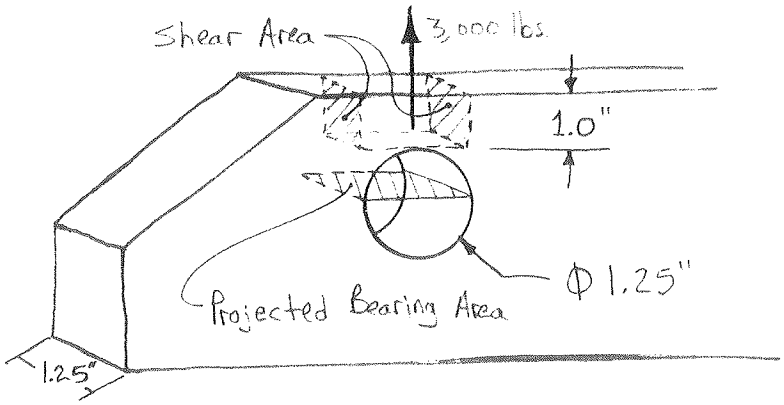

Material: 1018 C.R. Steel

Bearing Stress: 1018 C.R. steel, $F_y = 30,000$ psi

$$F_a = \frac{1}{3} F_y = 10,000 \text{ psi}$$

$$\sigma_{Bearing} = \frac{P}{A_b} = \frac{3,000 \text{ lbs}}{(1.25)(1.25)} = 1,920 \text{ psi}$$

$$\sigma_{Bearing} < F_a \quad \therefore \quad \underline{\underline{OK}}$$

Shear Stress:

$$\tau_s = \frac{P}{A_s} = \frac{3,000 \text{ lbs}}{(2)(1.0)(1.25)} = 1,200 \text{ psi}$$

$$\tau_{all} = \frac{1}{2} F_a = 5,000 \text{ psi}$$

$$\tau_s < \tau_{all} \quad \therefore \quad \underline{\underline{OK}}$$

Note: The lifting pin/shackle is rated for 13,000 lbs.

FERMILAB
ENGINEERING NOTE

SECTION	PROJECT	SERIAL-CATEGORY	PAGE
F2 MSD	KTeV: Analysis Magnet		

SUBJECT: KTeV Analysis Magnet: Lifting Fixture General Layout

NAME: L. Nicino

DATE: 2/9/95

REVISION DATE:

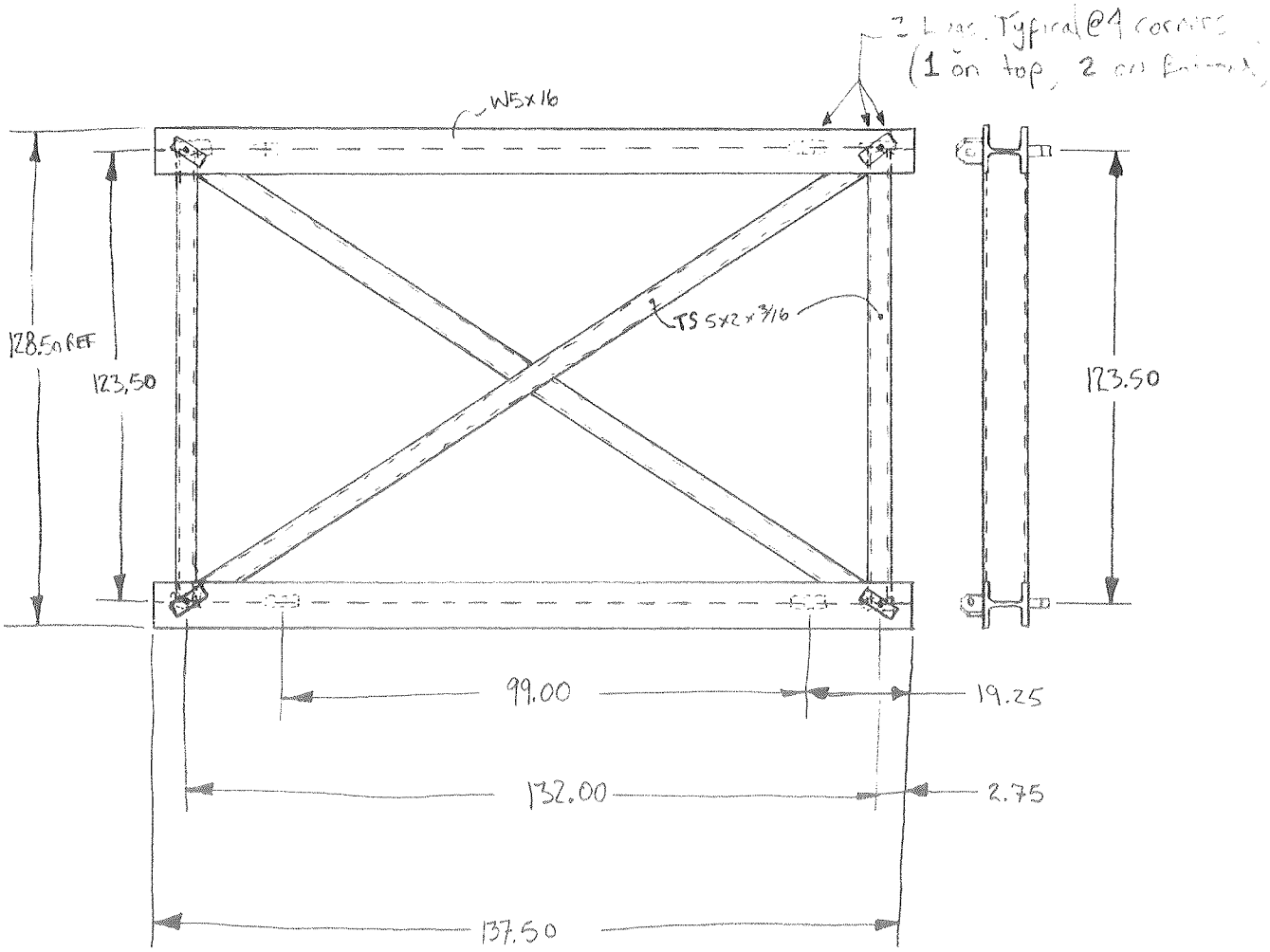

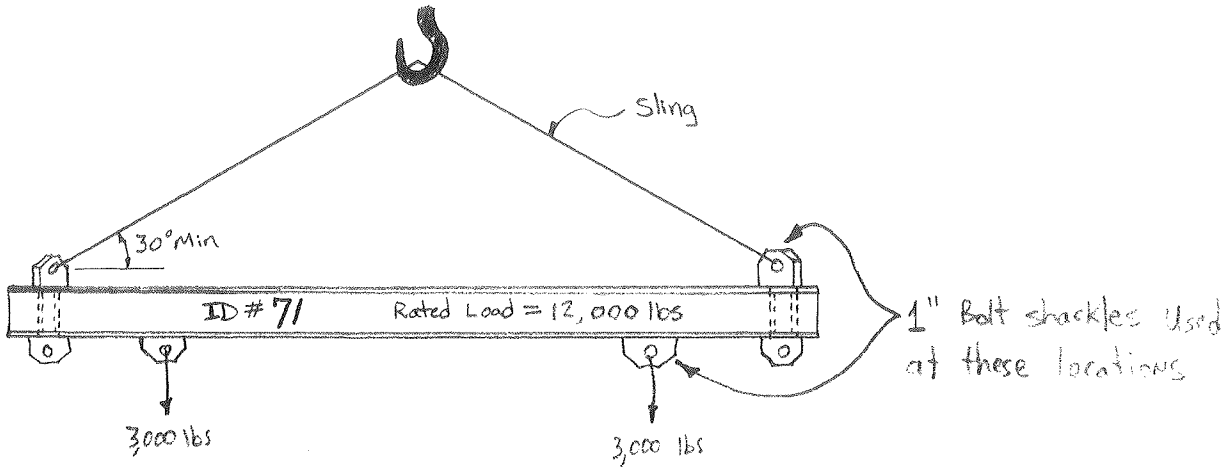

FERMILAB ENGINEERING NOTE	SECTION PD/MSD	PROJECT KTeV Analysis Mag.	SERIAL-CATEGORY	PAGE
SUBJECT: Determination of Vector Components of Sling force		NAME: D. Mitchell		
		DATE: 2/8/95	REVISION DATE	

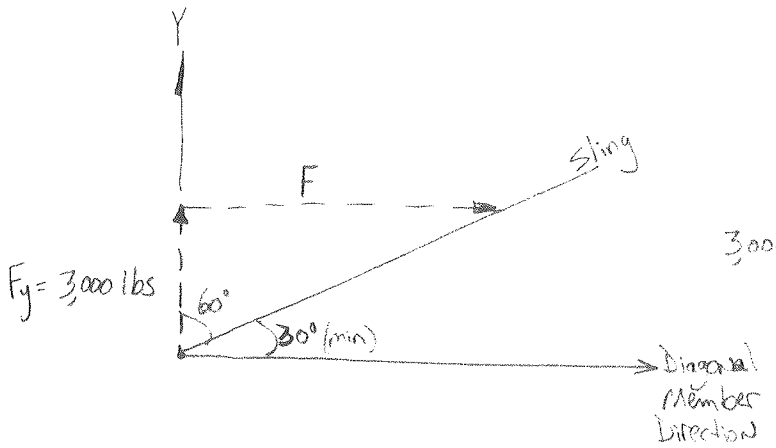

$3{,}000 \text{ lbs} \tan 60° = F = 5{,}196 \text{ lbs}$

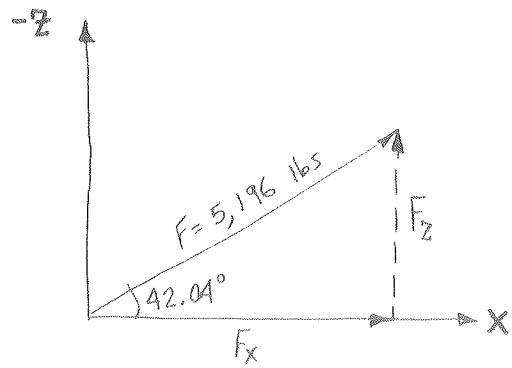

$5{,}196 \text{ lbs} \sin(42.04) = F_z = 3{,}480 \text{ lbs}$

$5{,}196 \text{ lbs} \cos(42.04) = F_x = 3{,}859 \text{ lbs}$

$F_y = 3{,}000 \text{ lbs}$

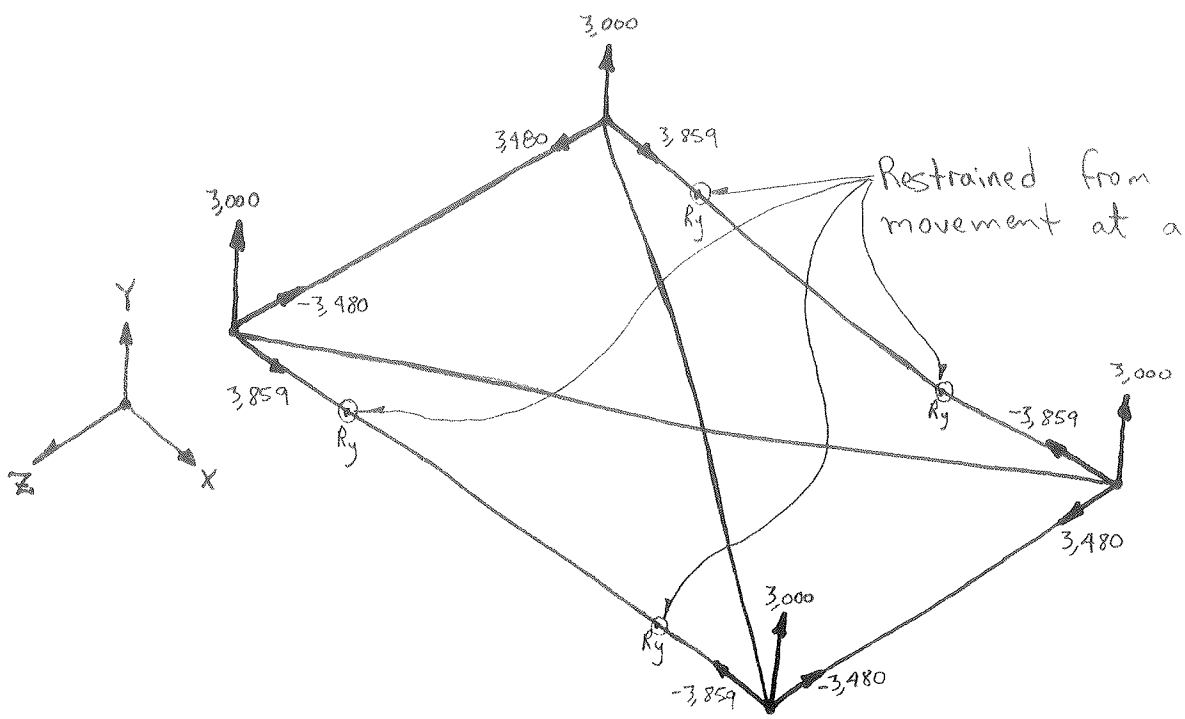

KTeV ANALYSIS MAGNET, LIFTING FIXTURE BOX SECTION
FEA MODEL

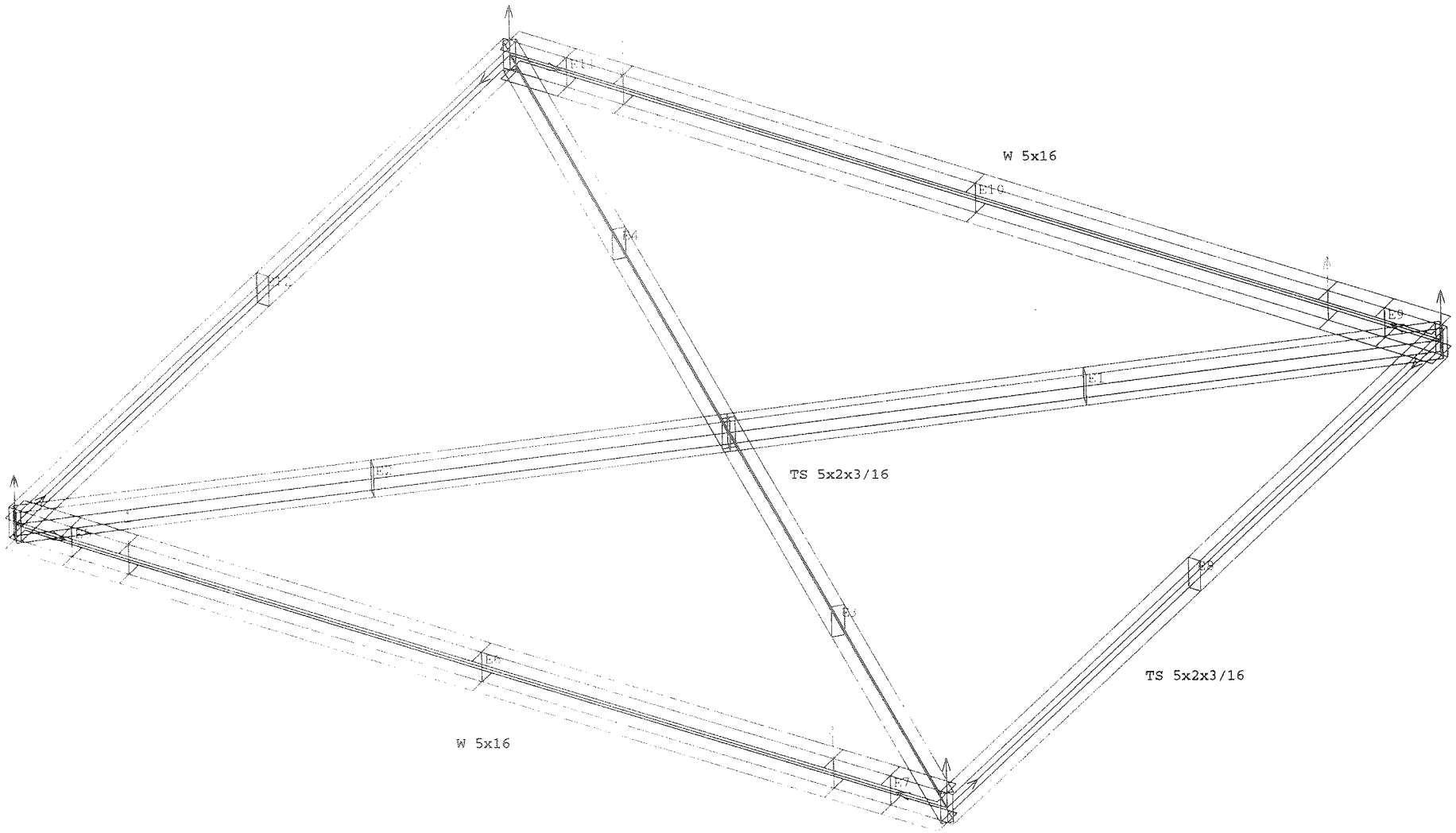

Restrained in the "Y" direction at load points.
Components of each 3000 Lb load are applied at each corner.

analysis_magnet_lift_fixture

RESULTS: 3- B.C. 1,LOAD 1,STRESS_3
MAGNITUDE - MIN: 1.88E+03 MAX: 6.03E+03
Data component: VON MISES STRESS at maximum point

VALUE OPTION:ACTUAL

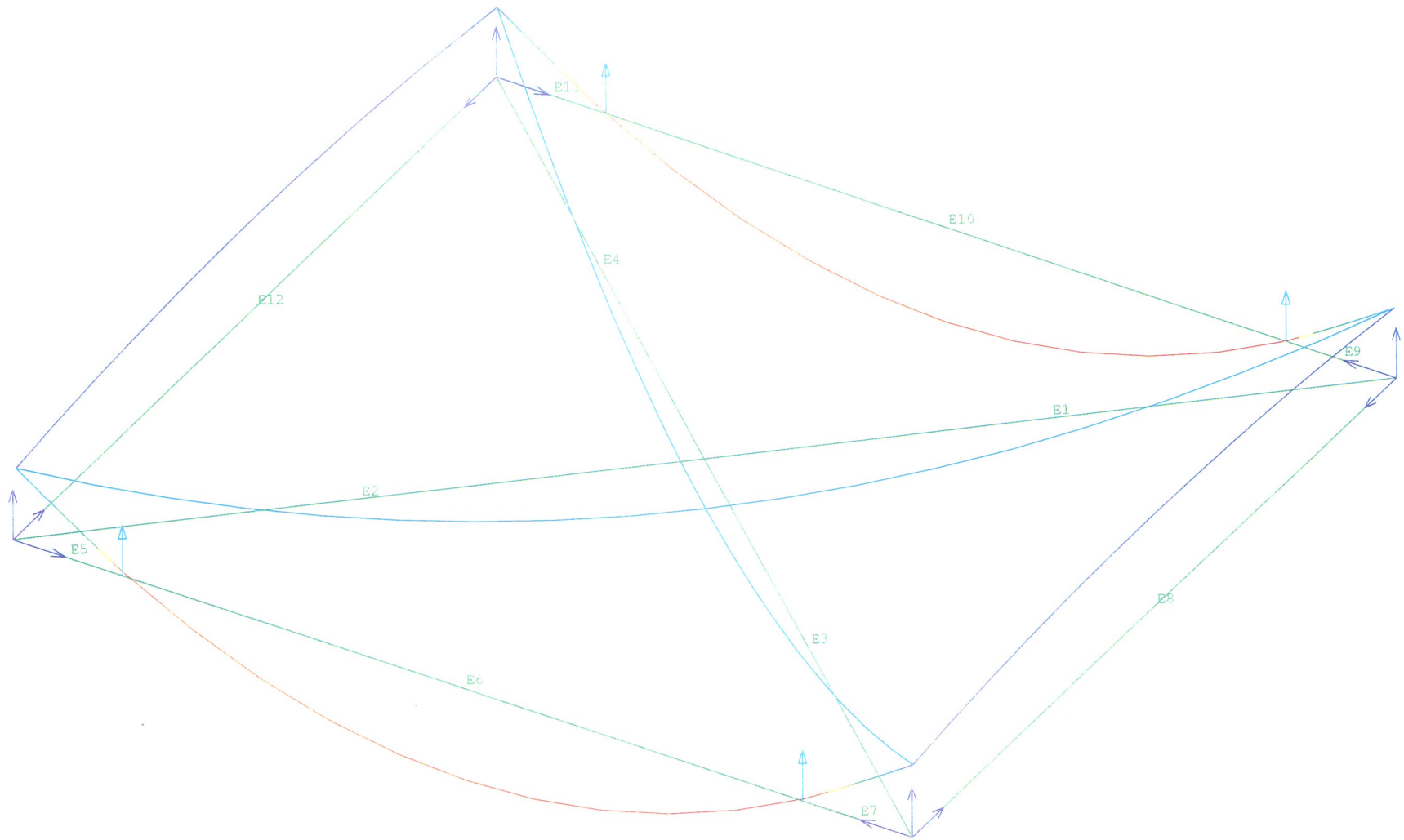

6.03E+03
5.62E+03
5.20E+03
4.79E+03
4.37E+03
3.96E+03
3.54E+03
3.13E+03
2.71E+03
2.30E+03
1.88E+03

analysis_magnet_lift_fixture

RESULTS: 1- B.C. 1,LOAD 1,DISPLACEMENT_1
DISPLACEMENT - Y MIN:-1.08E-01 MAX: 1.05E-01
DEFORMATION: 1- B.C. 1,LOAD 1,DISPLACEMENT_1
DISPLACEMENT - Y MIN:-1.08E-01 MAX: 1.05E-01
FRAME OF REF: PART

VALUE OPTION:ACTUAL

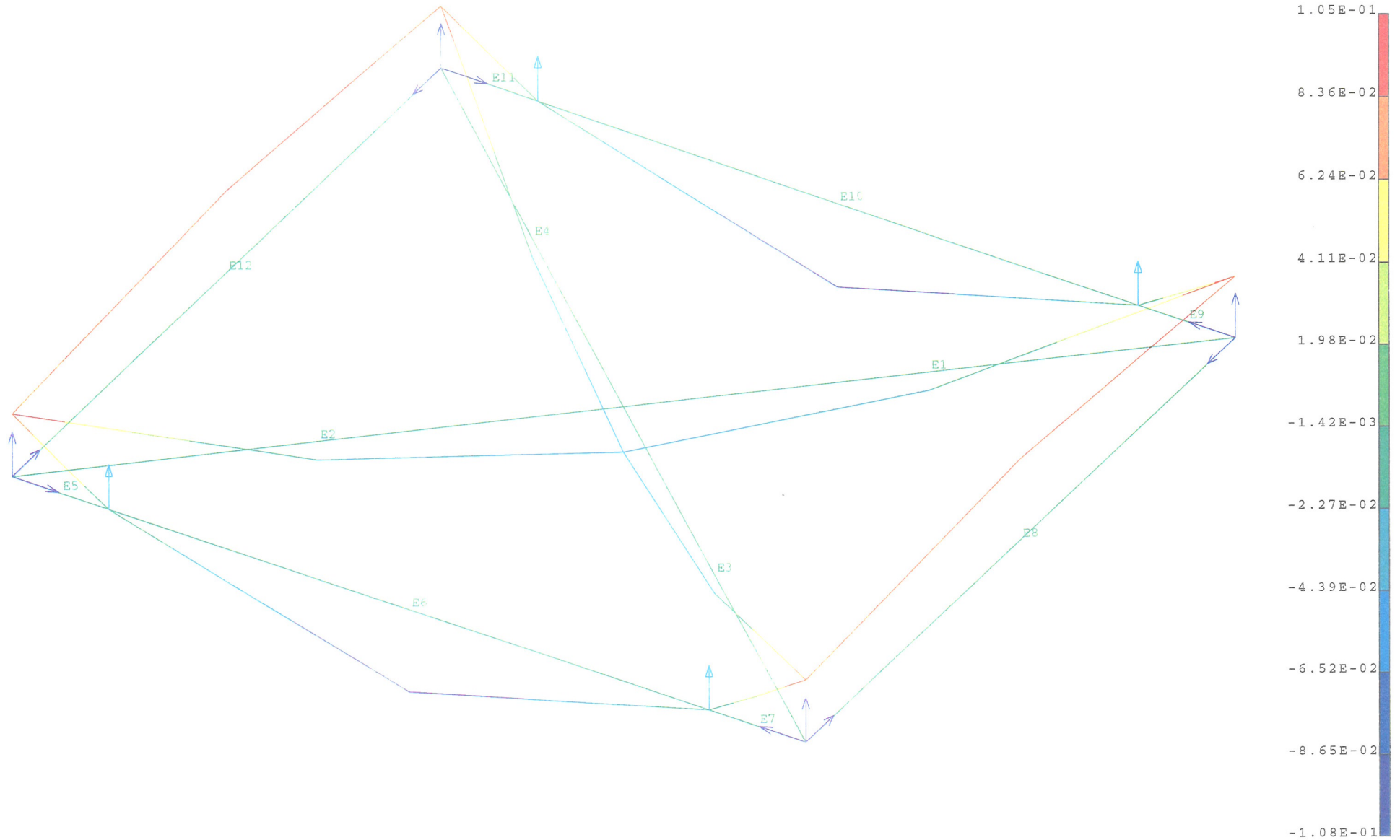

I-DEAS Master Series 1.3c: Simulation 10-Feb-95 11:42:26
analysis_magnet_lift_fixture
Data Output for Analysis Magnet Lifting Fixture

Group ID : Current
Result Set : 3 - B.C. 1,LOAD 1,STRESS_3
Report Type : Beam Stress Contour Units : IN
Result Type : STRESS
Data Component : Von Mises Stress at Maximum Point

Element	Node	Axial	Y-Shear	Z-Shear	Torque	Y-Bend	Z-Bend
1	4	-7.34E+02	0.00E+00	0.00E+00	8.35E+02	7.52E+00	2.04E+03
1	4	-7.34E+02	0.00E+00	0.00E+00	8.35E+02	-7.52E+00	2.04E+03
1	4	-7.34E+02	0.00E+00	0.00E+00	8.35E+02	-7.52E+00	-2.04E+03
1	4	-7.34E+02	0.00E+00	0.00E+00	8.35E+02	7.52E+00	-2.04E+03
1	4	-7.34E+02	0.00E+00	5.00E-01	5.79E+02	0.00E+00	2.14E+03
1	4	-7.34E+02	4.20E+00	0.00E+00	8.35E+02	-8.47E+00	0.00E+00
1	4	-7.34E+02	0.00E+00	5.00E-01	5.79E+02	0.00E+00	-2.14E+03
1	4	-7.34E+02	4.20E+00	0.00E+00	8.35E+02	8.47E+00	0.00E+00
1	4	-7.34E+02	0.00E+00	0.00E+00	8.35E+02	-9.63E-01	2.10E+03
1	4	-7.34E+02	0.00E+00	0.00E+00	8.35E+02	9.63E-01	2.10E+03
1	4	-7.34E+02	0.00E+00	0.00E+00	8.35E+02	9.63E-01	-2.10E+03
1	4	-7.34E+02	0.00E+00	0.00E+00	8.35E+02	-9.63E-01	-2.10E+03
1	1	-7.34E+02	0.00E+00	5.00E-01	5.79E+02	0.00E+00	2.20E+03
1	1	-7.34E+02	2.10E+00	0.00E+00	8.35E+02	1.08E+00	0.00E+00
1	1	-7.34E+02	0.00E+00	5.00E-01	5.79E+02	0.00E+00	-2.20E+03
1	1	-7.34E+02	2.10E+00	0.00E+00	8.35E+02	-1.08E+00	0.00E+00
1	1	-7.34E+02	0.00E+00	0.00E+00	8.35E+02	-9.45E+00	2.15E+03
1	1	-7.34E+02	0.00E+00	0.00E+00	8.35E+02	9.45E+00	2.15E+03
1	1	-7.34E+02	0.00E+00	0.00E+00	8.35E+02	9.45E+00	-2.15E+03
1	1	-7.34E+02	0.00E+00	0.00E+00	8.35E+02	-9.45E+00	-2.15E+03
1	1	-7.34E+02	0.00E+00	5.00E-01	5.79E+02	0.00E+00	2.26E+03
1	1	-7.34E+02	8.04E-13	0.00E+00	8.35E+02	1.06E+01	0.00E+00
1	1	-7.34E+02	0.00E+00	5.00E-01	5.79E+02	0.00E+00	-2.26E+03
1	1	-7.34E+02	8.04E-13	0.00E+00	8.35E+02	-1.06E+01	0.00E+00
2	1	-7.34E+02	0.00E+00	0.00E+00	8.35E+02	9.45E+00	2.15E+03
2	1	-7.34E+02	0.00E+00	0.00E+00	8.35E+02	-9.45E+00	2.15E+03
2	1	-7.34E+02	0.00E+00	0.00E+00	8.35E+02	-9.45E+00	-2.15E+03
2	1	-7.34E+02	0.00E+00	0.00E+00	8.35E+02	9.45E+00	-2.15E+03
2	1	-7.34E+02	0.00E+00	5.00E-01	5.79E+02	0.00E+00	2.26E+03
2	1	-7.34E+02	2.44E-12	0.00E+00	8.35E+02	-1.06E+01	0.00E+00
2	1	-7.34E+02	0.00E+00	5.00E-01	5.79E+02	0.00E+00	-2.26E+03
2	1	-7.34E+02	2.44E-12	0.00E+00	8.35E+02	1.06E+01	0.00E+00
2	1	-7.34E+02	0.00E+00	0.00E+00	8.35E+02	9.63E-01	2.10E+03
2	1	-7.34E+02	0.00E+00	0.00E+00	8.35E+02	-9.63E-01	2.10E+03
2	1	-7.34E+02	0.00E+00	0.00E+00	8.35E+02	-9.63E-01	-2.10E+03
2	1	-7.34E+02	0.00E+00	0.00E+00	8.35E+02	9.63E-01	-2.10E+03
2	9	-7.34E+02	0.00E+00	5.00E-01	5.79E+02	0.00E+00	2.20E+03
2	9	-7.34E+02	2.10E+00	0.00E+00	8.35E+02	-1.08E+00	0.00E+00
2	9	-7.34E+02	0.00E+00	5.00E-01	5.79E+02	0.00E+00	-2.20E+03
2	9	-7.34E+02	2.10E+00	0.00E+00	8.35E+02	1.08E+00	0.00E+00
2	9	-7.34E+02	0.00E+00	0.00E+00	8.35E+02	-7.52E+00	2.04E+03
2	9	-7.34E+02	0.00E+00	0.00E+00	8.35E+02	7.52E+00	2.04E+03
2	9	-7.34E+02	0.00E+00	0.00E+00	8.35E+02	7.52E+00	-2.04E+03
2	9	-7.34E+02	0.00E+00	0.00E+00	8.35E+02	-7.52E+00	-2.04E+03
2	9	-7.34E+02	0.00E+00	5.00E-01	5.79E+02	0.00E+00	2.14E+03
2	9	-7.34E+02	4.20E+00	0.00E+00	8.35E+02	8.47E+00	0.00E+00

I-DEAS Master Series 1.3c: Simulation 10-Feb-95 11:42:26
analysis_magnet_lift_fixture
Data Output for Analysis Magnet Lifting Fixture

Element	Node	Axial	Y-Shear	Z-Shear	Torque	Y-Bend	Z-Bend
2	9	-7.34E+02	0.00E+00	5.00E-01	5.79E+02	0.00E+00	-2.14E+03
2	9	-7.34E+02	4.20E+00	0.00E+00	8.35E+02	-8.47E+00	0.00E+00
3	1	-7.34E+02	0.00E+00	0.00E+00	8.35E+02	9.45E+00	-2.15E+03
3	1	-7.34E+02	0.00E+00	0.00E+00	8.35E+02	-9.45E+00	-2.15E+03
3	1	-7.34E+02	0.00E+00	0.00E+00	8.35E+02	-9.45E+00	2.15E+03
3	1	-7.34E+02	0.00E+00	0.00E+00	8.35E+02	9.45E+00	2.15E+03
3	1	-7.34E+02	0.00E+00	5.00E-01	5.79E+02	0.00E+00	-2.26E+03
3	1	-7.34E+02	6.57E-12	0.00E+00	8.35E+02	-1.06E+01	0.00E+00
3	1	-7.34E+02	0.00E+00	5.00E-01	5.79E+02	0.00E+00	2.26E+03
3	1	-7.34E+02	6.57E-12	0.00E+00	8.35E+02	1.06E+01	0.00E+00
3	1	-7.34E+02	0.00E+00	0.00E+00	8.35E+02	9.63E-01	-2.10E+03
3	1	-7.34E+02	0.00E+00	0.00E+00	8.35E+02	-9.63E-01	-2.10E+03
3	1	-7.34E+02	0.00E+00	0.00E+00	8.35E+02	-9.63E-01	2.10E+03
3	1	-7.34E+02	0.00E+00	0.00E+00	8.35E+02	9.63E-01	2.10E+03
3	8	-7.34E+02	0.00E+00	5.00E-01	5.79E+02	0.00E+00	-2.20E+03
3	8	-7.34E+02	2.10E+00	0.00E+00	8.35E+02	-1.08E+00	0.00E+00
3	8	-7.34E+02	0.00E+00	5.00E-01	5.79E+02	0.00E+00	2.20E+03
3	8	-7.34E+02	2.10E+00	0.00E+00	8.35E+02	1.08E+00	0.00E+00
3	8	-7.34E+02	0.00E+00	0.00E+00	8.35E+02	-7.52E+00	-2.04E+03
3	8	-7.34E+02	0.00E+00	0.00E+00	8.35E+02	7.52E+00	-2.04E+03
3	8	-7.34E+02	0.00E+00	0.00E+00	8.35E+02	7.52E+00	2.04E+03
3	8	-7.34E+02	0.00E+00	0.00E+00	8.35E+02	-7.52E+00	2.04E+03
3	8	-7.34E+02	0.00E+00	5.00E-01	5.79E+02	0.00E+00	-2.14E+03
3	8	-7.34E+02	4.20E+00	0.00E+00	8.35E+02	8.47E+00	0.00E+00
3	8	-7.34E+02	0.00E+00	5.00E-01	5.79E+02	0.00E+00	2.14E+03
3	8	-7.34E+02	4.20E+00	0.00E+00	8.35E+02	-8.47E+00	0.00E+00
4	1	-7.34E+02	0.00E+00	0.00E+00	8.35E+02	-9.45E+00	2.15E+03
4	1	-7.34E+02	0.00E+00	0.00E+00	8.35E+02	9.45E+00	2.15E+03
4	1	-7.34E+02	0.00E+00	0.00E+00	8.35E+02	9.45E+00	-2.15E+03
4	1	-7.34E+02	0.00E+00	0.00E+00	8.35E+02	-9.45E+00	-2.15E+03
4	1	-7.34E+02	0.00E+00	5.00E-01	5.79E+02	0.00E+00	2.26E+03
4	1	-7.34E+02	6.57E-12	0.00E+00	8.35E+02	1.06E+01	0.00E+00
4	1	-7.34E+02	0.00E+00	5.00E-01	5.79E+02	0.00E+00	-2.26E+03
4	1	-7.34E+02	6.57E-12	0.00E+00	8.35E+02	-1.06E+01	0.00E+00
4	1	-7.34E+02	0.00E+00	0.00E+00	8.35E+02	-9.63E-01	2.10E+03
4	1	-7.34E+02	0.00E+00	0.00E+00	8.35E+02	9.63E-01	2.10E+03
4	1	-7.34E+02	0.00E+00	0.00E+00	8.35E+02	9.63E-01	-2.10E+03
4	1	-7.34E+02	0.00E+00	0.00E+00	8.35E+02	-9.63E-01	-2.10E+03
4	10	-7.34E+02	0.00E+00	5.00E-01	5.79E+02	0.00E+00	2.20E+03
4	10	-7.34E+02	2.10E+00	0.00E+00	8.35E+02	1.08E+00	0.00E+00
4	10	-7.34E+02	0.00E+00	5.00E-01	5.79E+02	0.00E+00	-2.20E+03
4	10	-7.34E+02	2.10E+00	0.00E+00	8.35E+02	-1.08E+00	0.00E+00
4	10	-7.34E+02	0.00E+00	0.00E+00	8.35E+02	7.52E+00	2.04E+03
4	10	-7.34E+02	0.00E+00	0.00E+00	8.35E+02	-7.52E+00	2.04E+03
4	10	-7.34E+02	0.00E+00	0.00E+00	8.35E+02	-7.52E+00	-2.04E+03
4	10	-7.34E+02	0.00E+00	0.00E+00	8.35E+02	7.52E+00	-2.04E+03
4	10	-7.34E+02	0.00E+00	5.00E-01	5.79E+02	0.00E+00	2.14E+03
4	10	-7.34E+02	4.20E+00	0.00E+00	8.35E+02	-8.47E+00	0.00E+00
4	10	-7.34E+02	0.00E+00	5.00E-01	5.79E+02	0.00E+00	-2.14E+03
4	10	-7.34E+02	4.20E+00	0.00E+00	8.35E+02	8.47E+00	0.00E+00
5	9	-5.46E+02	0.00E+00	0.00E+00	0.00E+00	3.65E+00	6.65E+02
5	9	-5.46E+02	0.00E+00	0.00E+00	0.00E+00	-3.65E+00	6.65E+02

I-DEAS Master Series 1.3c: Simulation 10-Feb-95 11:42:26
analysis_magnet_lift_fixture
Data Output for Analysis Magnet Lifting Fixture

Element	Node	Axial	Y-Shear	Z-Shear	Torque	Y-Bend	Z-Bend
5	9	-5.46E+02	0.00E+00	0.00E+00	0.00E+00	-3.65E+00	-6.65E+02
5	9	-5.46E+02	0.00E+00	0.00E+00	0.00E+00	3.65E+00	-6.65E+02
5	9	-5.46E+02	1.55E+03	1.50E-12	1.42E-11	2.82E-01	5.50E+02
5	9	-5.46E+02	1.55E+03	1.50E-12	1.42E-11	-2.82E-01	5.50E+02
5	9	-5.46E+02	1.55E+03	1.50E-12	1.42E-11	-2.82E-01	-5.50E+02
5	9	-5.46E+02	1.55E+03	1.50E-12	1.42E-11	2.82E-01	-5.50E+02
5	9	-5.46E+02	2.77E+03	0.00E+00	5.24E-12	-1.75E-01	0.00E+00
5	9	-5.46E+02	2.77E+03	0.00E+00	5.24E-12	1.75E-01	0.00E+00
5	9	-5.46E+02	0.00E+00	0.00E+00	0.00E+00	3.65E+00	-2.41E+03
5	9	-5.46E+02	0.00E+00	0.00E+00	0.00E+00	-3.65E+00	-2.41E+03
5	9	-5.46E+02	0.00E+00	0.00E+00	0.00E+00	-3.65E+00	2.41E+03
5	9	-5.46E+02	0.00E+00	0.00E+00	0.00E+00	3.65E+00	2.41E+03
5	9	-5.46E+02	1.55E+03	1.12E-12	9.65E-12	2.82E-01	-1.99E+03
5	17	-5.46E+02	1.55E+03	1.12E-12	9.65E-12	-2.82E-01	-1.99E+03
5	17	-5.46E+02	1.55E+03	1.12E-12	9.65E-12	-2.82E-01	1.99E+03
5	17	-5.46E+02	1.55E+03	1.12E-12	9.65E-12	2.82E-01	1.99E+03
5	17	-5.46E+02	2.77E+03	0.00E+00	3.57E-12	-1.75E-01	0.00E+00
5	17	-5.46E+02	2.77E+03	0.00E+00	3.57E-12	1.75E-01	0.00E+00
5	17	-5.46E+02	0.00E+00	0.00E+00	0.00E+00	3.65E+00	-5.48E+03
5	17	-5.46E+02	0.00E+00	0.00E+00	0.00E+00	-3.65E+00	-5.48E+03
5	17	-5.46E+02	0.00E+00	0.00E+00	0.00E+00	-3.65E+00	5.48E+03
5	17	-5.46E+02	0.00E+00	0.00E+00	0.00E+00	3.65E+00	5.48E+03
5	17	-5.46E+02	1.55E+03	7.47E-13	5.15E-12	2.82E-01	-4.54E+03
5	17	-5.46E+02	1.55E+03	7.47E-13	5.15E-12	-2.82E-01	-4.54E+03
5	17	-5.46E+02	1.55E+03	7.47E-13	5.15E-12	-2.82E-01	4.54E+03
5	17	-5.46E+02	1.55E+03	7.47E-13	5.15E-12	2.82E-01	4.54E+03
5	17	-5.46E+02	2.77E+03	0.00E+00	1.91E-12	-1.75E-01	0.00E+00
5	17	-5.46E+02	2.77E+03	0.00E+00	1.91E-12	1.75E-01	0.00E+00
6	17	-5.46E+02	0.00E+00	0.00E+00	0.00E+00	3.65E+00	-5.48E+03
6	17	-5.46E+02	0.00E+00	0.00E+00	0.00E+00	-3.65E+00	-5.48E+03
6	17	-5.46E+02	0.00E+00	0.00E+00	0.00E+00	-3.65E+00	5.48E+03
6	17	-5.46E+02	0.00E+00	0.00E+00	0.00E+00	3.65E+00	5.48E+03
6	17	-5.46E+02	3.80E+00	9.59E-13	5.48E-12	2.82E-01	-4.54E+03
6	17	-5.46E+02	3.80E+00	9.59E-13	5.48E-12	-2.82E-01	-4.54E+03
6	17	-5.46E+02	3.80E+00	9.59E-13	5.48E-12	-2.82E-01	4.54E+03
6	17	-5.46E+02	3.80E+00	9.59E-13	5.48E-12	2.82E-01	4.54E+03
6	17	-5.46E+02	6.78E+00	0.00E+00	2.03E-12	-1.75E-01	0.00E+00
6	17	-5.46E+02	6.78E+00	0.00E+00	2.03E-12	1.75E-01	0.00E+00
6	17	-5.46E+02	0.00E+00	0.00E+00	0.00E+00	3.65E+00	-5.48E+03
6	17	-5.46E+02	0.00E+00	0.00E+00	0.00E+00	-3.65E+00	-5.48E+03
6	17	-5.46E+02	0.00E+00	0.00E+00	0.00E+00	-3.65E+00	5.48E+03
6	17	-5.46E+02	0.00E+00	0.00E+00	0.00E+00	3.65E+00	5.48E+03
6	17	-5.46E+02	3.80E+00	8.48E-13	6.38E-12	2.82E-01	-4.54E+03
6	21	-5.46E+02	3.80E+00	8.48E-13	6.38E-12	-2.82E-01	-4.54E+03
6	21	-5.46E+02	3.80E+00	8.48E-13	6.38E-12	-2.82E-01	4.54E+03
6	21	-5.46E+02	3.80E+00	8.48E-13	6.38E-12	2.82E-01	4.54E+03
6	21	-5.46E+02	6.78E+00	0.00E+00	2.36E-12	-1.75E-01	0.00E+00
6	21	-5.46E+02	6.78E+00	0.00E+00	2.36E-12	1.75E-01	0.00E+00
6	21	-5.46E+02	0.00E+00	0.00E+00	0.00E+00	3.65E+00	-5.48E+03
6	21	-5.46E+02	0.00E+00	0.00E+00	0.00E+00	-3.65E+00	-5.48E+03
6	21	-5.46E+02	0.00E+00	0.00E+00	0.00E+00	-3.65E+00	5.48E+03
6	21	-5.46E+02	0.00E+00	0.00E+00	0.00E+00	3.65E+00	5.48E+03

I-DEAS Master Series 1.3c: Simulation 10-Feb-95 11:42:26
analysis_magnet_lift_fixture
Data Output for Analysis Magnet Lifting Fixture

Element	Node	Axial	Y-Shear	Z-Shear	Torque	Y-Bend	Z-Bend
6	21	-5.46E+02	3.80E+00	7.38E-13	7.27E-12	2.82E-01	-4.54E+03
6	21	-5.46E+02	3.80E+00	7.38E-13	7.27E-12	-2.82E-01	-4.54E+03
6	21	-5.46E+02	3.80E+00	7.38E-13	7.27E-12	-2.82E-01	4.54E+03
6	21	-5.46E+02	3.80E+00	7.38E-13	7.27E-12	2.82E-01	4.54E+03
6	21	-5.46E+02	6.78E+00	0.00E+00	2.69E-12	-1.75E-01	0.00E+00
6	21	-5.46E+02	6.78E+00	0.00E+00	2.69E-12	1.75E-01	0.00E+00
7	21	-5.46E+02	0.00E+00	0.00E+00	0.00E+00	3.65E+00	-5.48E+03
7	21	-5.46E+02	0.00E+00	0.00E+00	0.00E+00	-3.65E+00	-5.48E+03
7	21	-5.46E+02	0.00E+00	0.00E+00	0.00E+00	-3.65E+00	5.48E+03
7	21	-5.46E+02	0.00E+00	0.00E+00	0.00E+00	3.65E+00	5.48E+03
7	21	-5.46E+02	1.55E+03	6.09E-13	7.01E-11	2.82E-01	-4.54E+03
7	21	-5.46E+02	1.55E+03	6.09E-13	7.01E-11	-2.82E-01	-4.54E+03
7	21	-5.46E+02	1.55E+03	6.09E-13	7.01E-11	-2.82E-01	4.54E+03
7	21	-5.46E+02	1.55E+03	6.09E-13	7.01E-11	2.82E-01	4.54E+03
7	21	-5.46E+02	2.77E+03	0.00E+00	2.59E-11	-1.75E-01	0.00E+00
7	21	-5.46E+02	2.77E+03	0.00E+00	2.59E-11	1.75E-01	0.00E+00
7	21	-5.46E+02	0.00E+00	0.00E+00	0.00E+00	3.65E+00	-2.41E+03
7	21	-5.46E+02	0.00E+00	0.00E+00	0.00E+00	-3.65E+00	-2.41E+03
7	21	-5.46E+02	0.00E+00	0.00E+00	0.00E+00	-3.65E+00	2.41E+03
7	21	-5.46E+02	0.00E+00	0.00E+00	0.00E+00	3.65E+00	2.41E+03
7	21	-5.46E+02	1.55E+03	2.37E-12	4.11E-11	2.82E-01	-1.99E+03
7	8	-5.46E+02	1.55E+03	2.37E-12	4.11E-11	-2.82E-01	-1.99E+03
7	8	-5.46E+02	1.55E+03	2.37E-12	4.11E-11	-2.82E-01	1.99E+03
7	8	-5.46E+02	1.55E+03	2.37E-12	4.11E-11	2.82E-01	1.99E+03
7	8	-5.46E+02	2.77E+03	0.00E+00	1.52E-11	-1.75E-01	0.00E+00
7	8	-5.46E+02	2.77E+03	0.00E+00	1.52E-11	1.75E-01	0.00E+00
7	8	-5.46E+02	0.00E+00	0.00E+00	0.00E+00	3.65E+00	6.65E+02
7	8	-5.46E+02	0.00E+00	0.00E+00	0.00E+00	-3.65E+00	6.65E+02
7	8	-5.46E+02	0.00E+00	0.00E+00	0.00E+00	-3.65E+00	-6.65E+02
7	8	-5.46E+02	0.00E+00	0.00E+00	0.00E+00	3.65E+00	-6.65E+02
7	8	-5.46E+02	1.55E+03	4.13E-12	1.20E-11	2.82E-01	5.50E+02
7	8	-5.46E+02	1.55E+03	4.13E-12	1.20E-11	-2.82E-01	5.50E+02
7	8	-5.46E+02	1.55E+03	4.13E-12	1.20E-11	-2.82E-01	-5.50E+02
7	8	-5.46E+02	1.55E+03	4.13E-12	1.20E-11	2.82E-01	-5.50E+02
7	8	-5.46E+02	2.77E+03	0.00E+00	4.45E-12	-1.75E-01	0.00E+00
7	8	-5.46E+02	2.77E+03	0.00E+00	4.45E-12	1.75E-01	0.00E+00
8	8	-9.65E+02	0.00E+00	0.00E+00	8.54E-12	-1.44E+00	8.77E+02
8	8	-9.65E+02	0.00E+00	0.00E+00	8.54E-12	1.44E+00	8.77E+02
8	8	-9.65E+02	0.00E+00	0.00E+00	8.54E-12	1.44E+00	-8.77E+02
8	8	-9.65E+02	0.00E+00	0.00E+00	8.54E-12	-1.44E+00	-8.77E+02
8	8	-9.65E+02	0.00E+00	1.13E-12	5.92E-12	0.00E+00	9.18E+02
8	8	-9.65E+02	2.81E+00	0.00E+00	8.54E-12	1.62E+00	0.00E+00
8	8	-9.65E+02	0.00E+00	1.13E-12	5.92E-12	0.00E+00	-9.18E+02
8	8	-9.65E+02	2.81E+00	0.00E+00	8.54E-12	-1.62E+00	0.00E+00
8	8	-9.65E+02	0.00E+00	0.00E+00	9.55E-12	-1.44E+00	8.77E+02
8	8	-9.65E+02	0.00E+00	0.00E+00	9.55E-12	1.44E+00	8.77E+02
8	8	-9.65E+02	0.00E+00	0.00E+00	9.55E-12	1.44E+00	-8.77E+02
8	8	-9.65E+02	0.00E+00	0.00E+00	9.55E-12	-1.44E+00	-8.77E+02
8	4	-9.65E+02	0.00E+00	1.29E-12	6.62E-12	0.00E+00	9.18E+02
8	4	-9.65E+02	2.81E+00	0.00E+00	9.55E-12	1.62E+00	0.00E+00
8	4	-9.65E+02	0.00E+00	1.29E-12	6.62E-12	0.00E+00	-9.18E+02
8	4	-9.65E+02	2.81E+00	0.00E+00	9.55E-12	-1.62E+00	0.00E+00

I-DEAS Master Series 1.3c: Simulation 10-Feb-95 11:42:26
analysis_magnet_lift_fixture
Data Output for Analysis Magnet Lifting Fixture

Element	Node	Axial	Y-Shear	Z-Shear	Torque	Y-Bend	Z-Bend
8	4	-9.65E+02	0.00E+00	0.00E+00	1.06E-11	-1.44E+00	8.77E+02
8	4	-9.65E+02	0.00E+00	0.00E+00	1.06E-11	1.44E+00	8.77E+02
8	4	-9.65E+02	0.00E+00	0.00E+00	1.06E-11	1.44E+00	-8.77E+02
8	4	-9.65E+02	0.00E+00	0.00E+00	1.06E-11	-1.44E+00	-8.77E+02
8	4	-9.65E+02	0.00E+00	1.46E-12	7.33E-12	0.00E+00	9.18E+02
8	4	-9.65E+02	2.81E+00	0.00E+00	1.06E-11	1.62E+00	0.00E+00
8	4	-9.65E+02	0.00E+00	1.46E-12	7.33E-12	0.00E+00	-9.18E+02
8	4	-9.65E+02	2.81E+00	0.00E+00	1.06E-11	-1.62E+00	0.00E+00
9	4	-5.46E+02	0.00E+00	0.00E+00	0.00E+00	-3.65E+00	-6.65E+02
9	4	-5.46E+02	0.00E+00	0.00E+00	0.00E+00	3.65E+00	-6.65E+02
9	4	-5.46E+02	0.00E+00	0.00E+00	0.00E+00	3.65E+00	6.65E+02
9	4	-5.46E+02	0.00E+00	0.00E+00	0.00E+00	-3.65E+00	6.65E+02
9	4	-5.46E+02	1.55E+03	4.92E-12	7.32E-12	-2.82E-01	-5.50E+02
9	4	-5.46E+02	1.55E+03	4.92E-12	7.32E-12	2.82E-01	-5.50E+02
9	4	-5.46E+02	1.55E+03	4.92E-12	7.32E-12	2.82E-01	5.50E+02
9	4	-5.46E+02	1.55E+03	4.92E-12	7.32E-12	-2.82E-01	5.50E+02
9	4	-5.46E+02	2.77E+03	0.00E+00	2.71E-12	1.75E-01	0.00E+00
9	4	-5.46E+02	2.77E+03	0.00E+00	2.71E-12	-1.75E-01	0.00E+00
9	4	-5.46E+02	0.00E+00	0.00E+00	0.00E+00	-3.65E+00	2.41E+03
9	4	-5.46E+02	0.00E+00	0.00E+00	0.00E+00	3.65E+00	2.41E+03
9	4	-5.46E+02	0.00E+00	0.00E+00	0.00E+00	3.65E+00	-2.41E+03
9	4	-5.46E+02	0.00E+00	0.00E+00	0.00E+00	-3.65E+00	-2.41E+03
9	4	-5.46E+02	1.55E+03	5.03E-12	7.10E-12	-2.82E-01	1.99E+03
9	5	-5.46E+02	1.55E+03	5.03E-12	7.10E-12	2.82E-01	1.99E+03
9	5	-5.46E+02	1.55E+03	5.03E-12	7.10E-12	2.82E-01	-1.99E+03
9	5	-5.46E+02	1.55E+03	5.03E-12	7.10E-12	-2.82E-01	-1.99E+03
9	5	-5.46E+02	2.77E+03	0.00E+00	2.62E-12	1.75E-01	0.00E+00
9	5	-5.46E+02	2.77E+03	0.00E+00	2.62E-12	-1.75E-01	0.00E+00
9	5	-5.46E+02	0.00E+00	0.00E+00	0.00E+00	-3.65E+00	5.48E+03
9	5	-5.46E+02	0.00E+00	0.00E+00	0.00E+00	3.65E+00	5.48E+03
9	5	-5.46E+02	0.00E+00	0.00E+00	0.00E+00	3.65E+00	-5.48E+03
9	5	-5.46E+02	0.00E+00	0.00E+00	0.00E+00	-3.65E+00	-5.48E+03
9	5	-5.46E+02	1.55E+03	5.14E-12	6.87E-12	-2.82E-01	4.54E+03
9	5	-5.46E+02	1.55E+03	5.14E-12	6.87E-12	2.82E-01	4.54E+03
9	5	-5.46E+02	1.55E+03	5.14E-12	6.87E-12	2.82E-01	-4.54E+03
9	5	-5.46E+02	1.55E+03	5.14E-12	6.87E-12	-2.82E-01	-4.54E+03
9	5	-5.46E+02	2.77E+03	0.00E+00	2.54E-12	1.75E-01	0.00E+00
9	5	-5.46E+02	2.77E+03	0.00E+00	2.54E-12	-1.75E-01	0.00E+00
10	5	-5.46E+02	0.00E+00	0.00E+00	0.00E+00	-3.65E+00	5.48E+03
10	5	-5.46E+02	0.00E+00	0.00E+00	0.00E+00	3.65E+00	5.48E+03
10	5	-5.46E+02	0.00E+00	0.00E+00	0.00E+00	3.65E+00	-5.48E+03
10	5	-5.46E+02	0.00E+00	0.00E+00	0.00E+00	-3.65E+00	-5.48E+03
10	5	-5.46E+02	3.80E+00	5.09E-12	1.99E-11	-2.82E-01	4.54E+03
10	5	-5.46E+02	3.80E+00	5.09E-12	1.99E-11	2.82E-01	4.54E+03
10	5	-5.46E+02	3.80E+00	5.09E-12	1.99E-11	2.82E-01	-4.54E+03
10	5	-5.46E+02	3.80E+00	5.09E-12	1.99E-11	-2.82E-01	-4.54E+03
10	5	-5.46E+02	6.78E+00	0.00E+00	7.37E-12	1.75E-01	0.00E+00
10	5	-5.46E+02	6.78E+00	0.00E+00	7.37E-12	-1.75E-01	0.00E+00
10	5	-5.46E+02	0.00E+00	0.00E+00	0.00E+00	-3.65E+00	5.48E+03
10	5	-5.46E+02	0.00E+00	0.00E+00	0.00E+00	3.65E+00	5.48E+03
10	5	-5.46E+02	0.00E+00	0.00E+00	0.00E+00	3.65E+00	-5.48E+03
10	5	-5.46E+02	0.00E+00	0.00E+00	0.00E+00	-3.65E+00	-5.48E+03

I-DEAS Master Series 1.3c: Simulation 10-Feb-95 11:42:26
analysis_magnet_lift_fixture
Data Output for Analysis Magnet Lifting Fixture

Element	Node	Axial	Y-Shear	Z-Shear	Torque	Y-Bend	Z-Bend
10	5	-5.46E+02	3.80E+00	5.52E-12	1.34E-11	-2.82E-01	4.54E+03
10	19	-5.46E+02	3.80E+00	5.52E-12	1.34E-11	2.82E-01	4.54E+03
10	19	-5.46E+02	3.80E+00	5.52E-12	1.34E-11	2.82E-01	-4.54E+03
10	19	-5.46E+02	3.80E+00	5.52E-12	1.34E-11	-2.82E-01	-4.54E+03
10	19	-5.46E+02	6.78E+00	0.00E+00	4.97E-12	1.75E-01	0.00E+00
10	19	-5.46E+02	6.78E+00	0.00E+00	4.97E-12	-1.75E-01	0.00E+00
10	19	-5.46E+02	0.00E+00	0.00E+00	0.00E+00	-3.65E+00	5.48E+03
10	19	-5.46E+02	0.00E+00	0.00E+00	0.00E+00	3.65E+00	5.48E+03
10	19	-5.46E+02	0.00E+00	0.00E+00	0.00E+00	3.65E+00	-5.48E+03
10	19	-5.46E+02	0.00E+00	0.00E+00	0.00E+00	-3.65E+00	-5.48E+03
10	19	-5.46E+02	3.80E+00	5.96E-12	6.95E-12	-2.82E-01	4.54E+03
10	19	-5.46E+02	3.80E+00	5.96E-12	6.95E-12	2.82E-01	4.54E+03
10	19	-5.46E+02	3.80E+00	5.96E-12	6.95E-12	2.82E-01	-4.54E+03
10	19	-5.46E+02	3.80E+00	5.96E-12	6.95E-12	-2.82E-01	-4.54E+03
10	19	-5.46E+02	6.78E+00	0.00E+00	2.57E-12	1.75E-01	0.00E+00
10	19	-5.46E+02	6.78E+00	0.00E+00	2.57E-12	-1.75E-01	0.00E+00
11	19	-5.46E+02	0.00E+00	0.00E+00	0.00E+00	-3.65E+00	5.48E+03
11	19	-5.46E+02	0.00E+00	0.00E+00	0.00E+00	3.65E+00	5.48E+03
11	19	-5.46E+02	0.00E+00	0.00E+00	0.00E+00	3.65E+00	-5.48E+03
11	19	-5.46E+02	0.00E+00	0.00E+00	0.00E+00	-3.65E+00	-5.48E+03
11	19	-5.46E+02	1.55E+03	6.44E-12	8.36E-11	-2.82E-01	4.54E+03
11	19	-5.46E+02	1.55E+03	6.44E-12	8.36E-11	2.82E-01	4.54E+03
11	19	-5.46E+02	1.55E+03	6.44E-12	8.36E-11	2.82E-01	-4.54E+03
11	19	-5.46E+02	1.55E+03	6.44E-12	8.36E-11	-2.82E-01	-4.54E+03
11	19	-5.46E+02	2.77E+03	0.00E+00	3.09E-11	1.75E-01	0.00E+00
11	19	-5.46E+02	2.77E+03	0.00E+00	3.09E-11	-1.75E-01	0.00E+00
11	19	-5.46E+02	0.00E+00	0.00E+00	0.00E+00	-3.65E+00	2.41E+03
11	19	-5.46E+02	0.00E+00	0.00E+00	0.00E+00	3.65E+00	2.41E+03
11	19	-5.46E+02	0.00E+00	0.00E+00	0.00E+00	3.65E+00	-2.41E+03
11	19	-5.46E+02	0.00E+00	0.00E+00	0.00E+00	-3.65E+00	-2.41E+03
11	19	-5.46E+02	1.55E+03	6.20E-12	4.35E-11	-2.82E-01	1.99E+03
11	10	-5.46E+02	1.55E+03	6.20E-12	4.35E-11	2.82E-01	1.99E+03
11	10	-5.46E+02	1.55E+03	6.20E-12	4.35E-11	2.82E-01	-1.99E+03
11	10	-5.46E+02	1.55E+03	6.20E-12	4.35E-11	-2.82E-01	-1.99E+03
11	10	-5.46E+02	2.77E+03	0.00E+00	1.61E-11	1.75E-01	0.00E+00
11	10	-5.46E+02	2.77E+03	0.00E+00	1.61E-11	-1.75E-01	0.00E+00
11	10	-5.46E+02	0.00E+00	0.00E+00	0.00E+00	-3.65E+00	-6.65E+02
11	10	-5.46E+02	0.00E+00	0.00E+00	0.00E+00	3.65E+00	-6.65E+02
11	10	-5.46E+02	0.00E+00	0.00E+00	0.00E+00	3.65E+00	6.65E+02
11	10	-5.46E+02	0.00E+00	0.00E+00	0.00E+00	-3.65E+00	6.65E+02
11	10	-5.46E+02	1.55E+03	5.96E-12	3.44E-12	-2.82E-01	-5.50E+02
11	10	-5.46E+02	1.55E+03	5.96E-12	3.44E-12	2.82E-01	-5.50E+02
11	10	-5.46E+02	1.55E+03	5.96E-12	3.44E-12	2.82E-01	5.50E+02
11	10	-5.46E+02	1.55E+03	5.96E-12	3.44E-12	-2.82E-01	5.50E+02
11	10	-5.46E+02	2.77E+03	0.00E+00	1.27E-12	1.75E-01	0.00E+00
11	10	-5.46E+02	2.77E+03	0.00E+00	1.27E-12	-1.75E-01	0.00E+00
12	10	-9.65E+02	0.00E+00	0.00E+00	4.52E-12	-1.44E+00	8.77E+02
12	10	-9.65E+02	0.00E+00	0.00E+00	4.52E-12	1.44E+00	8.77E+02
12	10	-9.65E+02	0.00E+00	0.00E+00	4.52E-12	1.44E+00	-8.77E+02
12	10	-9.65E+02	0.00E+00	0.00E+00	4.52E-12	-1.44E+00	-8.77E+02
12	10	-9.65E+02	0.00E+00	2.27E-12	3.13E-12	0.00E+00	9.18E+02
12	10	-9.65E+02	2.81E+00	0.00E+00	4.52E-12	1.62E+00	0.00E+00

I-DEAS Master Series 1.3c: Simulation 10-Feb-95 11:42:26
analysis_magnet_lift_fixture
Data Output for Analysis Magnet Lifting Fixture

Element	Node	Axial	Y-Shear	Z-Shear	Torque	Y-Bend	Z-Bend
12	10	-9.65E+02	0.00E+00	2.27E-12	3.13E-12	0.00E+00	-9.18E+02
12	10	-9.65E+02	2.81E+00	0.00E+00	4.52E-12	-1.62E+00	0.00E+00
12	10	-9.65E+02	0.00E+00	0.00E+00	3.36E-12	-1.44E+00	8.77E+02
12	10	-9.65E+02	0.00E+00	0.00E+00	3.36E-12	1.44E+00	8.77E+02
12	10	-9.65E+02	0.00E+00	0.00E+00	3.36E-12	1.44E+00	-8.77E+02
12	10	-9.65E+02	0.00E+00	0.00E+00	3.36E-12	-1.44E+00	-8.77E+02
12	9	-9.65E+02	0.00E+00	2.22E-12	2.33E-12	0.00E+00	9.18E+02
12	9	-9.65E+02	2.81E+00	0.00E+00	3.36E-12	1.62E+00	0.00E+00
12	9	-9.65E+02	0.00E+00	2.22E-12	2.33E-12	0.00E+00	-9.18E+02
12	9	-9.65E+02	2.81E+00	0.00E+00	3.36E-12	-1.62E+00	0.00E+00
12	9	-9.65E+02	0.00E+00	0.00E+00	2.20E-12	-1.44E+00	8.77E+02
12	9	-9.65E+02	0.00E+00	0.00E+00	2.20E-12	1.44E+00	8.77E+02
12	9	-9.65E+02	0.00E+00	0.00E+00	2.20E-12	1.44E+00	-8.77E+02
12	9	-9.65E+02	0.00E+00	0.00E+00	2.20E-12	-1.44E+00	-8.77E+02
12	9	-9.65E+02	0.00E+00	2.17E-12	1.53E-12	0.00E+00	9.18E+02
12	9	-9.65E+02	2.81E+00	0.00E+00	2.20E-12	1.62E+00	0.00E+00
12	9	-9.65E+02	0.00E+00	2.17E-12	1.53E-12	0.00E+00	-9.18E+02
12	9	-9.65E+02	2.81E+00	0.00E+00	2.20E-12	-1.62E+00	0.00E+00
		8	5	1	1	1	5
Maximum		9.65E+02	2.77E+03	5.00E-01	8.35E+02	1.06E+01	5.48E+03
		5	1	1	5	1	1
Minimum		5.46E+02	0.00E+00	0.00E+00	0.00E+00	0.00E+00	0.00E+00
Average		6.64E+02	4.36E+02	3.70E-02	2.28E+02	2.44E+00	2.09E+03

FERMILAB ENGINEERING NOTE	SECTION RD/MSD	PROJECT KTeV Analysis Magnet	SERIAL-CATEGORY	PAGE

SUBJECT: Stress Calculations on Main support Wide-flange

NAME: D. Mitchell

DATE: 2/14/95

REVISION DATE:

Look at bending moments in the beam: (See attached FEA Data)

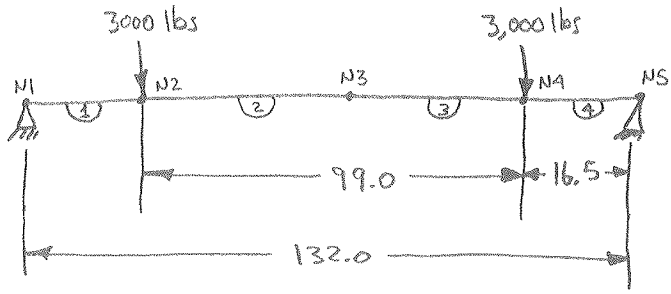

Beam Type

W5x16

$V_{max} = 3{,}000$ lbs

$M_{max} = 49{,}500$ in-lb

$\delta_{max} = -.165$ in

Axial load = 2,555 lbs (From I-DEAS FEA Solution: see attached data)

Beam Data:

Area = 4.68 in^2

$I_x = 21.3$ in^4

$S_x = 8.51$ in^3

$d = 5.01$ in

$b_f = 5.0$ in

$t_f = .36$ in

$r_{min} = 1.27$ in

$$\frac{KL}{r} = \frac{(1)(132.0)}{(1.27)} = 104 \qquad F_a = 12{,}470 \text{ psi}$$

$$F_a > \tfrac{1}{3} F_y \quad \therefore \quad F_a = 12{,}000 \text{ psi}$$

$$\sigma_b = \frac{M}{S_x} = \frac{49{,}500 \text{ in-lbs}}{8.51 \text{ in}^3} = 5{,}817 \text{ psi} \quad \underline{\underline{OK}}$$

$$\sigma_b < F_a \quad \underline{\underline{OK}}$$

$$\sigma_{compression} = \frac{F}{A} = \frac{2{,}555 \text{ lbs}}{4.68 \text{ in}^2} = 546 \text{ psi} \quad \underline{\underline{OK}}$$

Chapter H, AISC Manual of Steel Construction: Combined stress:

$$\frac{\sigma_c}{F_a} + \frac{\sigma_b}{F_a} \le 1.0\,? \implies \frac{546}{12{,}000} + \frac{5{,}817}{12{,}000} = .53 \le 1.0 \quad \underline{\underline{OK}}$$

HORIZONTAL BEAM WITH NO AXIAL LOADS: INPUT DATA (Analysis Magnet)
(MAXIMUM 25 SEGMENTS) (Lifting Fixture)

NUMBER OF SEGMENTS
3

SEGMENT NUMBER	SEGMENT LENGTH	MOMENT OF INERTIA	MATERIAL TYPE	BEAM AREA	ELEMENTS PER SEGMENT	UNIFORM LOAD	C
1	16.500	21.30	1	4.68	1	0.0	2.50
2	99.000	21.30	1	4.68	2	0.0	2.50
3	16.500	21.30	1	4.68	1	0.0	2.50

SEGMENT NUMBER	1st END Y-DISPL	1st END SLOPE	2nd END Y-DISPL	2nd END SLOPE	1st END FORCE	1st END MOMENT	2nd END FORCE	2nd END MOMENT
1	0.0	888.0	999.0	888.0	0.0	0.0	-3000.0	0.0
2	999.0	888.0	999.0	888.0	-3000.0	0.0	-3000.0	0.0
3	999.0	888.0	0.0	888.0	-3000.0	0.0	0.0	0.0

NOTES:

INTEGERS MUST NOT HAVE A DECIMAL POINT
REAL NUMBERS MUST HAVE A DECIMAL POINT

999.0 ====> FREE END CONDITION IN Y-DISPLACEMENT

888.0 ====> FREE END CONDITION IN ROTATION

SLOPE IMPLIES A FORCED CONDITION THAT CAUSED A ROTATION IN THE BEAM AT THE POINT OF APPLICATION. (DATA VALUE SHOULD BE "RISE/RUN")

THE VALUE OF "C" IS THE DISTANCE FROM THE BENDING AXIS TO THE DISTANCE WHERE STRESS IS TO BE COMPUTED. FOR MAXIMUM STRESS, THE VALUE OF "C" SHOULD BE THE DISTANCE FROM THE BENDING AXIS TO THE EXTREME FIBERS OF THE BEAM.

MATERIAL TYPE NUMBER COORESPONDS TO THE MATERIAL NUMBER LISTED IN DATA FILE: mtype.dat

THE DATA VALUES LISTED HERE ARE NOT COLUMN SENSITIVE; THEY ARE ONLY SHOWN IN COLUMNS FOR CLARITY!

HORIZONTAL BEAM ANALYSIS USING FEM TECHNIQUES

NODE	GLOBAL COORDINATE
1	0.0000
2	16.5000
3	66.0000
4	115.5000
5	132.0000

ELEM NO.	NODAL CONNECTIVITY		INERTIA	EMOD	SPWT	XNU
1	1	2	.213E+02	0.3000E+08	0.000740	.3000
2	2	3	.213E+02	0.3000E+08	0.000740	.3000
3	3	4	.213E+02	0.3000E+08	0.000740	.3000
4	4	5	.213E+02	0.3000E+08	0.000740	.3000

NODAL DISPLACEMENTS	Y-DISPL	SLOPE
NODE 1	0.000000	-0.004474
NODE 2	-0.070299	-0.003835
NODE 3	-0.165203	0.000000
NODE 4	-0.070299	0.003835
NODE 5	0.000000	0.004474

NODAL REACTIONS	Y-FORCE	MOMENT
NODE 1	3000.0000	0.0000
NODE 2	-3000.0000	0.0000
NODE 3	0.0000	0.0000
NODE 4	-3000.0000	0.0000
NODE 5	3000.0000	0.0000

ELEMENTAL SHEAR FORCES	LEFT	CENTER	RIGHT
ELEMENT 1	-3000.0000	3000.0000	3000.0000
ELEMENT 2	0.0000	0.0000	0.0000
ELEMENT 3	0.0000	0.0000	0.0000
ELEMENT 4	3000.0000	-3000.0000	-3000.0000

ELEMENTAL MOMENTS AT	LEFT	CENTER	RIGHT
ELEMENT 1	0.0000	24750.0000	49500.0000
ELEMENT 2	49500.0000	49500.0000	49500.0000
ELEMENT 3	49500.0000	49500.0000	49500.0000
ELEMENT 4	49500.0000	24750.0000	0.0000

ELEMENT STRAIN	LEFT	CENTER	RIGHT
ELEMENT 1	0.0000E+00	0.9683E-04	0.1937E-03
ELEMENT 2	0.1937E-03	0.1937E-03	0.1937E-03
ELEMENT 3	0.1937E-03	0.1937E-03	0.1937E-03
ELEMENT 4	0.1937E-03	0.9683E-04	0.0000E+00

ELEMENT BENDING STRESS	LEFT	CENTER	RIGHT
ELEMENT 1	0.0000E+00	0.2905E+04	0.5810E+04

ELEMENT 2	0.5810E+04	0.5810E+04	0.5810E+04
ELEMENT 3	0.5810E+04	0.5810E+04	0.5810E+04
ELEMENT 4	0.5810E+04	0.2905E+04	0.0000E+00

ELEMENT SHEAR STRESS	LEFT	CENTER	RIGHT
ELEMENT 1	0.6410E+03	0.6410E+03	0.6410E+03
ELEMENT 2	0.5417E-12	0.1393E-12	0.5417E-12
ELEMENT 3	0.3887E-12	0.1875E-12	0.3887E-12
ELEMENT 4	0.6410E+03	0.6410E+03	0.6410E+03

FERMILAB ENGINEERING NOTE	SECTION	PROJECT	SERIAL-CATEGORY	PAGE
	[illegible]	[illegible]		

SUBJECT	NAME	
Lifting Fixture: Load Capacity for [illegible]	[illegible]	
	DATE 2/13/87	REVISION DATE

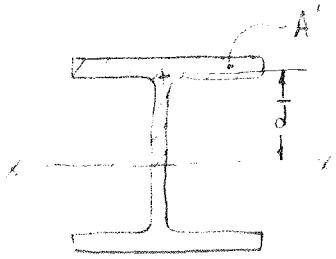

$$\tau = \frac{VQ}{Ib}$$

$b = .24$ in

$I = 21.3$ in^4

$Q = A'\bar{d} = (2.369)(2.047) = 4.849$ in^3

$$\tau_{max} = \frac{V(4.849 \text{ in}^3)}{(21.3 \text{ in}^4)(.24 \text{ in})} = (.9486)\,V \ \text{lbs/in}^2$$

$$\tau_{max} \approx \frac{V \text{ (lbs)}}{\text{(area of the web)}} = \frac{V}{1.03} = .971\,V$$

$F_V = 3000$ lbs $= V$

$\tau_{max} = .9486\,V = (.9486)(3000) = \underline{\underline{2,846 \text{ psi}}}$

Allowable shear $= \frac{1}{2}$ Allowable bending stress $= \frac{1}{3}$(Yield Stress)$\frac{1}{2}$

$\tau_{all} = (\frac{1}{2})(\frac{1}{3})(36,000 \text{ psi}) = 6,000$ psi

$\boxed{\tau_{max} < \tau_{all} \quad \underline{\underline{OK}}}$

FERMILAB ENGINEERING NOTE	SECTION RD/MSD	PROJECT KTeV Analysis Magnet	SERIAL-CATEGORY	PAGE

SUBJECT	NAME D. Mitchell
Stress Calculations on Bracing/Cross Members	DATE 2/14/95 — REVISION DATE

Bracing members see only compressive loads.

(Loads due to torque in each beam are considered small. The I-DEAS FEA shows these added stresses to be small.)

Use TS 5 x 2 x 3/16

$Length_{max} = 122.50$ in

$F_{max} = 2{,}308$ lbs (obtained from I-DEAS FEA)

$Area = 2.39$ in^2

$r_{min} = .816$ in

$$\frac{KL}{r} = \frac{(1)(123.50)}{.816} = 151.3 \qquad F_a = 6{,}550 \text{ psi}$$

$$\sigma_c = \frac{F}{A} = \frac{2{,}308 \text{ lbs}}{2.39 \text{ in}^2} = 966 \text{ psi}$$

$\sigma_c < F_a$ ∴ adequate beam

$\sigma_{bending} = 918$ psi (from I-DEAS FEA)

$\sigma_b < F_a$ ∴ adequate beam

LIFTING LUG ANALYSIS for LIFTING FIXTURES

BEARING AND SHEAR STRESSES, PIN SHEAR, AND WELD SIZING

$d := 1.75$ in

$Hole\_diameter := 1.25$ in

$Pin\_diameter := 1.00$ in

$edge\_distance := 1.625$ in

$minimum\_edge\_distance := 1.625$ in

$lug\_width := 4.75$ in

$lug\_thickness := .75$ in

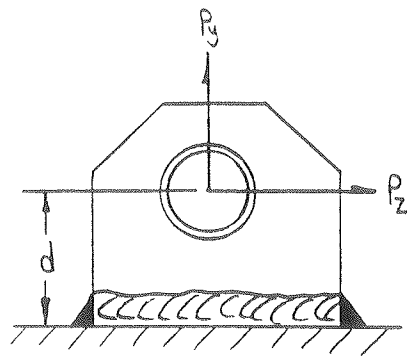

Loads:

$P_x := 300.0$ Lbs $\quad P_y := 3000.0$ Lbs $\quad P_z := 5196.0$ Lbs

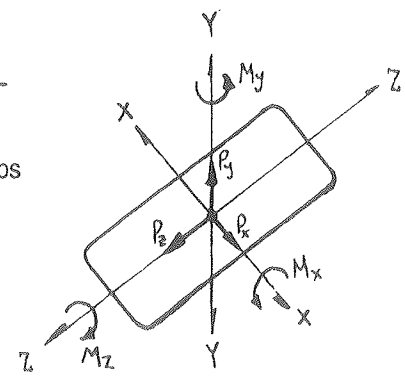

Moments:

$M_x := P_z \cdot d \qquad M_x = 9093$ in-Lbs

$M_z := P_x \cdot d \qquad M_z = 525$ in-Lbs

Lug Material: 1018 Cold Rolled Steel ***Pin Material: Grade 2 or Better***

$F_y := 30000$ psi $\quad F_{all} := \frac{F_y}{3} \quad F_{all} = 10000$ psi $\quad F_u := 58000$ psi

$\tau_{all} := \frac{F_{all}}{2} \quad \tau_{all} := 5000$ psi

Weld Lengths:

$Weld\_length := lug\_width \qquad c := \frac{Weld\_length}{2} \qquad c = 2.375$ in

$Weld\_width := lug\_thickness \qquad w := Weld\_width \qquad w = 0.75$ in

Calculate the moment of inertia of the line weld group

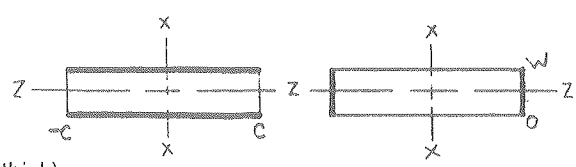

$$I_{weld} = \int_{\square}^{\square} z^2 \, dl$$ where dl is assumed to be unity (1" thick)

$$I_{x.weld} := 2 \cdot \int_{-c}^{c} z^2 \, dz + 2 \cdot \int_{0}^{w} c^2 \, dx \qquad I_{z.weld} := 2 \cdot \int_{-\frac{w}{2}}^{\frac{w}{2}} x^2 \, dx + 2 \cdot \int_{0}^{2 \cdot c} \left(\frac{w}{2}\right)^2 dz$$

$I_{x.weld} = 26.323$ in³ $\qquad I_{z.weld} = 1.406$ in³

The load on the weld due to bending:

$P_{bx} := \frac{M_x \cdot c}{I_{x.weld}} \qquad P_{bx} = 820.421$ Lbs/in $\qquad P_{bz} := \frac{M_z \cdot \frac{w}{2}}{I_{z.weld}} \qquad P_{bz} = 140$ Lbs/in

The load on the weld due to shear:

$$total\_weld\_length := 2 \cdot (Weld\_length + Weld\_width) \qquad total\_weld\_length = 11 \quad \text{in}$$

$$\tau_x := \frac{P_x}{total\_weld\_length} \qquad \tau_x = 27.273 \quad \text{lbs/in}$$

$$\tau_y := \frac{P_y}{total\_weld\_length} \qquad \tau_y = 272.727 \quad \text{lbs/in}$$

$$\tau_z := \frac{P_z}{total\_weld\_length} \qquad \tau_z = 472.364 \quad \text{lbs/in}$$

Now, calculate the total vector sum of the weld loads:

$$P_{total} := \sqrt{\tau_x^2 + \left(\tau_y + P_{bx} + P_{bz}\right)^2 + \tau_z^2} \qquad P_{total} = 1320.805 \quad \text{lbs/in}$$

Size the Fillet Weld based on the total weld load:

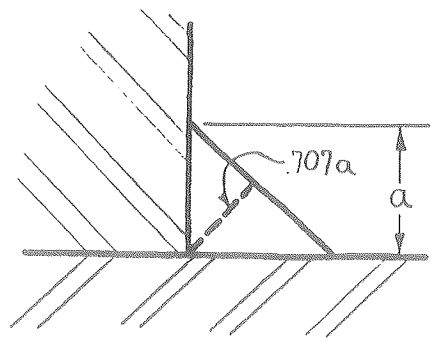

$$t_e = .707 \cdot a_{min}$$

$$P_{total} = t_e \cdot \tau_{all}$$

$$P_{total} = .707 \cdot a_{min} \cdot \tau_{all}$$

The allowable shear is derived from the base material, not the weld material.

$$a_{min} := 1.4144 \cdot \frac{P_{total}}{\tau_{all}} \qquad a_{min} = 0.374$$

Round this value up to the nearest 1/8" weld size

$$a_{min} := \frac{ceil(a_{min} \cdot 8)}{8}$$

$$a_{min} = 0.375 \quad \text{in}$$

<--- **minimum weld size needed for the given parameters.**

Calculate the Bearing Stress:

The lug thickness was assumed at the beginning of this analysis. The following calculations will determine the required minimum thickness needed for this lug.

$F_y = 30000$ psi

$F_{all} = 10000$ psi

$\tau_{all} = 5000$ psi

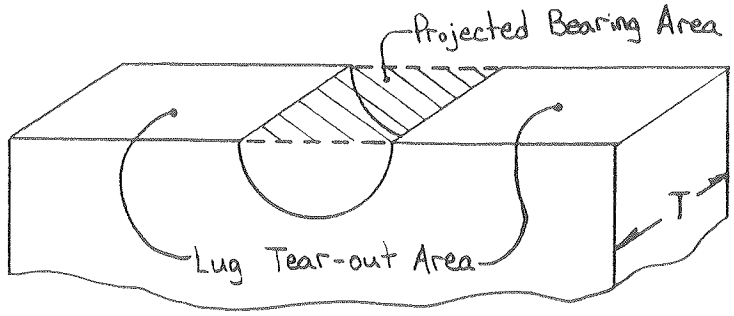

$projected\_bearing\_area = Hole\_diameter \cdot T$ (Let "T" be the minimum lug thickness)

Calculate the vector sum of the forces and apply this single load to the lug, through the lifting pin.

$ORIGIN := 1$

$Load := \sqrt{P_x^2 + P_y^2 + P_z^2}$ $Load = 6007.363$ Lbs

$F_{all} = \frac{Load}{Hole\_diameter \cdot T}$

$T_1 := \frac{Load}{(F_{all} \cdot Hole\_diameter)}$ $T_1 = 0.481$ in <--- minimum thickness based on bearing stress

Calculate the Shear Stress:

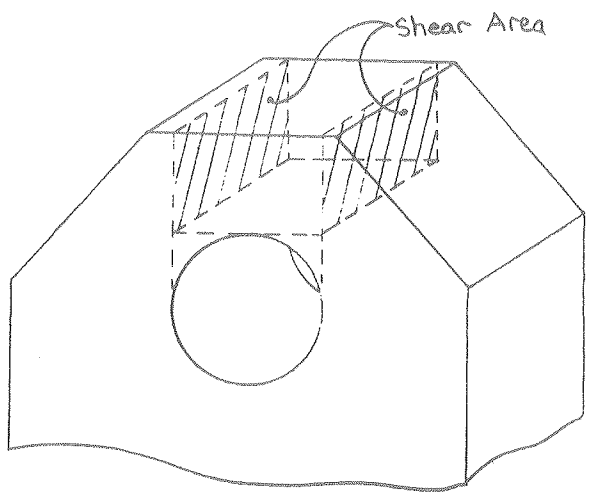

$edge\_distance = 1.625$ in

$clearance := edge\_distance - \frac{Hole\_diameter}{2}$

$shear\_area = 2 \cdot (clearance \cdot T)$

$\tau_{all} = \frac{Load}{shear\_area} = \frac{1}{2} \cdot \frac{Load}{(clearance \cdot T)}$

$T_2 := \frac{1}{2} \cdot \frac{Load}{(\tau_{all} \cdot clearance)}$ $T_2 = 0.601$ in <--- minimum thickness based on shear stress

The minimum thickness needed for the lug is determined by considering bearing and shear stresses and choosing the larger of the two minimum lug thicknesses. The minimum weld size is then converted into the nearest 1/8" increment weld size, greater than the actual calculated minimum.

$max(T) = 0.601$ in $T_{min} := \frac{ceil(max(T) \cdot 8)}{8}$ $T_{min} = 0.625$ in <--- ***minimum lug thickness***

Shear on Bolt, (Double Shear): (compare the allowable shear stress with the actual shear stress)

$Pin\_diameter = 1$ in

$shear\_area := \frac{2 \cdot \pi \cdot Pin\_diameter^2}{4}$ $\quad shear\_area = 1.571$ in²

$Load = 6007.363$ Lbs

$\tau_{bolt} := \frac{Load}{shear\_area}$ $\quad \tau_{bolt} = 3824.406$ psi

$\tau_{allowable\_shear} := .22 \cdot F_u$ $\quad \tau_{allowable\_shear} = 12760$ psi

(The allowable shear stress is calculated from *Guidelines for Structural Bolting in Accordance with the AISC Eighth Edition "Manual of Steel Construction"*, Fermilab TM-1662, May 11, 1990.)

Tear-out on Lug Cross-section: (compare the allowable stress with the actual tear-out stress)

$lug\_width = 4.75$

$lug\_thickness = 0.75$

$Hole\_diameter = 1.25$

$Area := (lug\_width \cdot lug\_thickness) - (Hole\_diameter \cdot lug\_thickness)$ $\quad Area = 2.625$ in²

$Load = 6007.363$ Lbs

$Tear\_out := \frac{Load}{Area}$ $\quad Tear\_out = 2288.519$ psi

$F_{all} = 10000$ psi

FERMILAB ENGINEERING NOTE	SECTION	PROJECT	SERIAL-CATEGORY	PAGE
	RD/MSG	KTeV		

SUBJECT	NAME	
KTeV Analysis Magnet Lifting Crane Lifting Lug	[illegible]	
	DATE 3/10/95	REVISION DATE

Final Lifting Lug Design: (3/4" Thick)

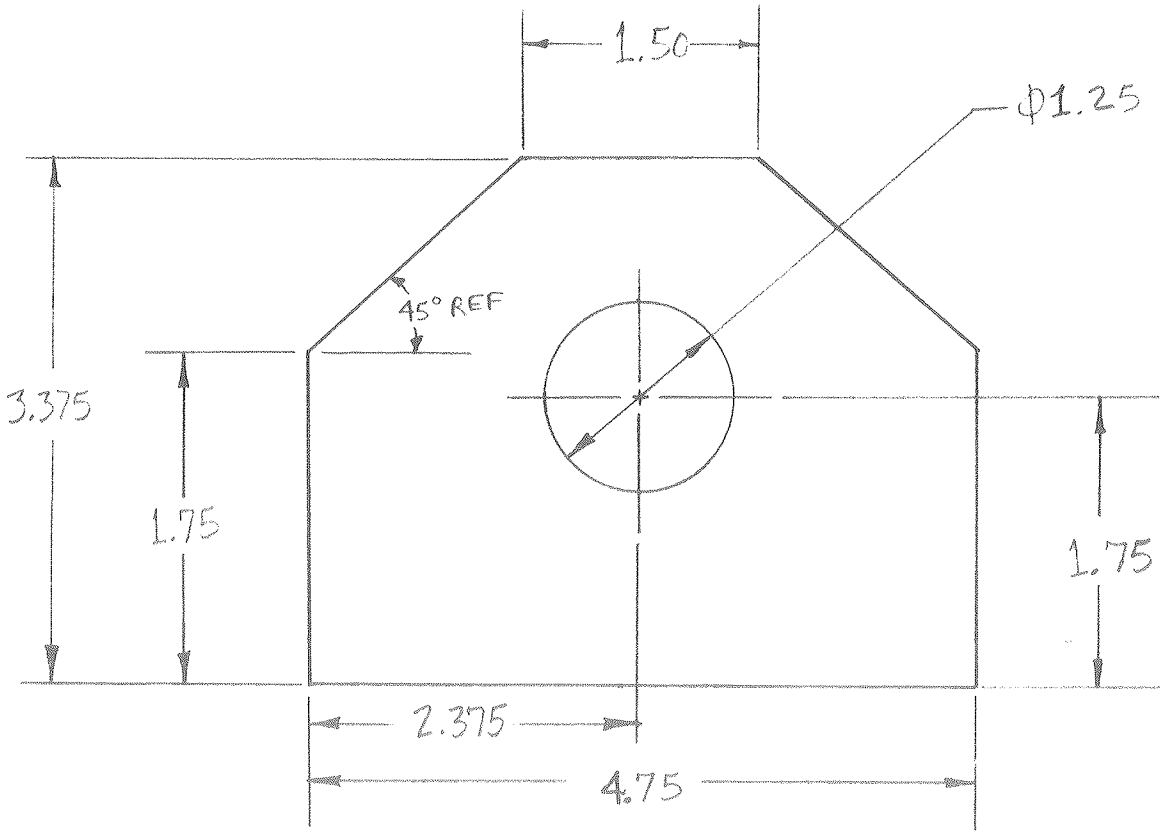

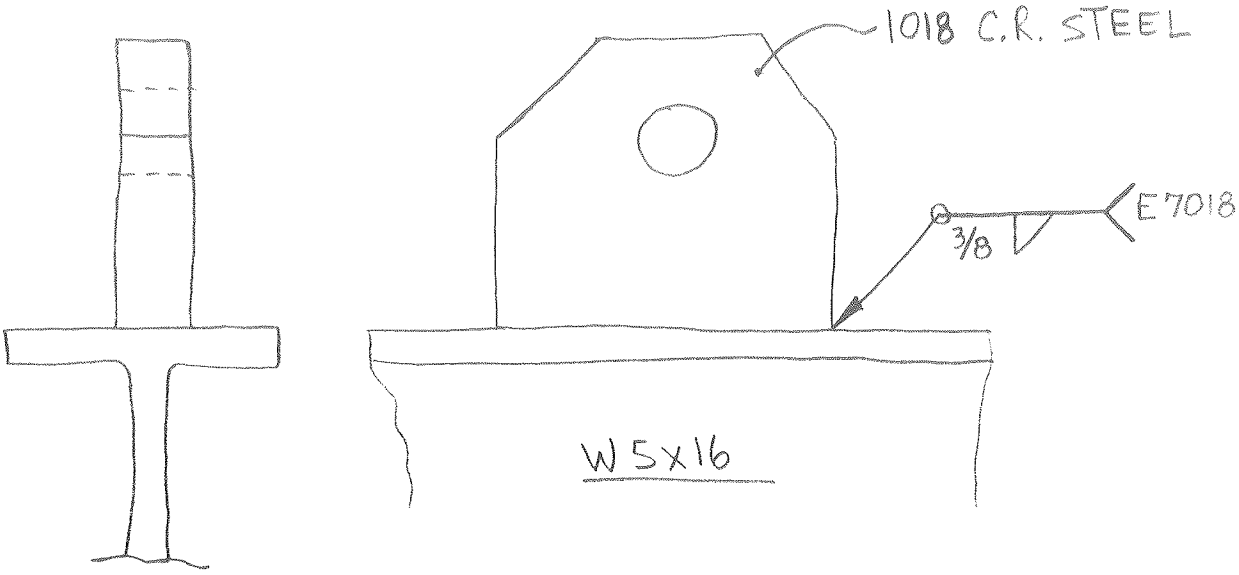

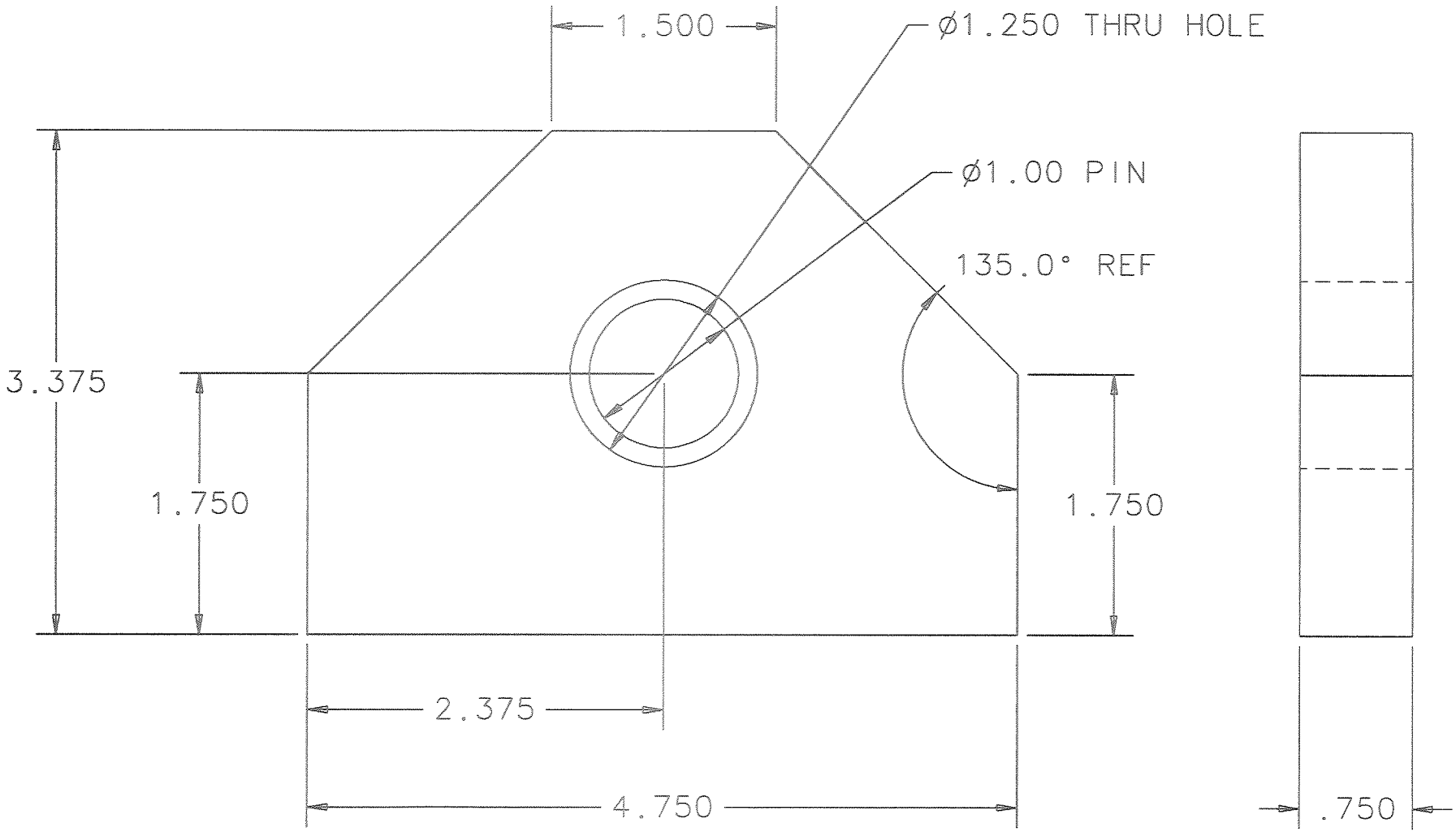

Plotted Wed Feb 15 10:13:03 CST 1995 by dmitchel

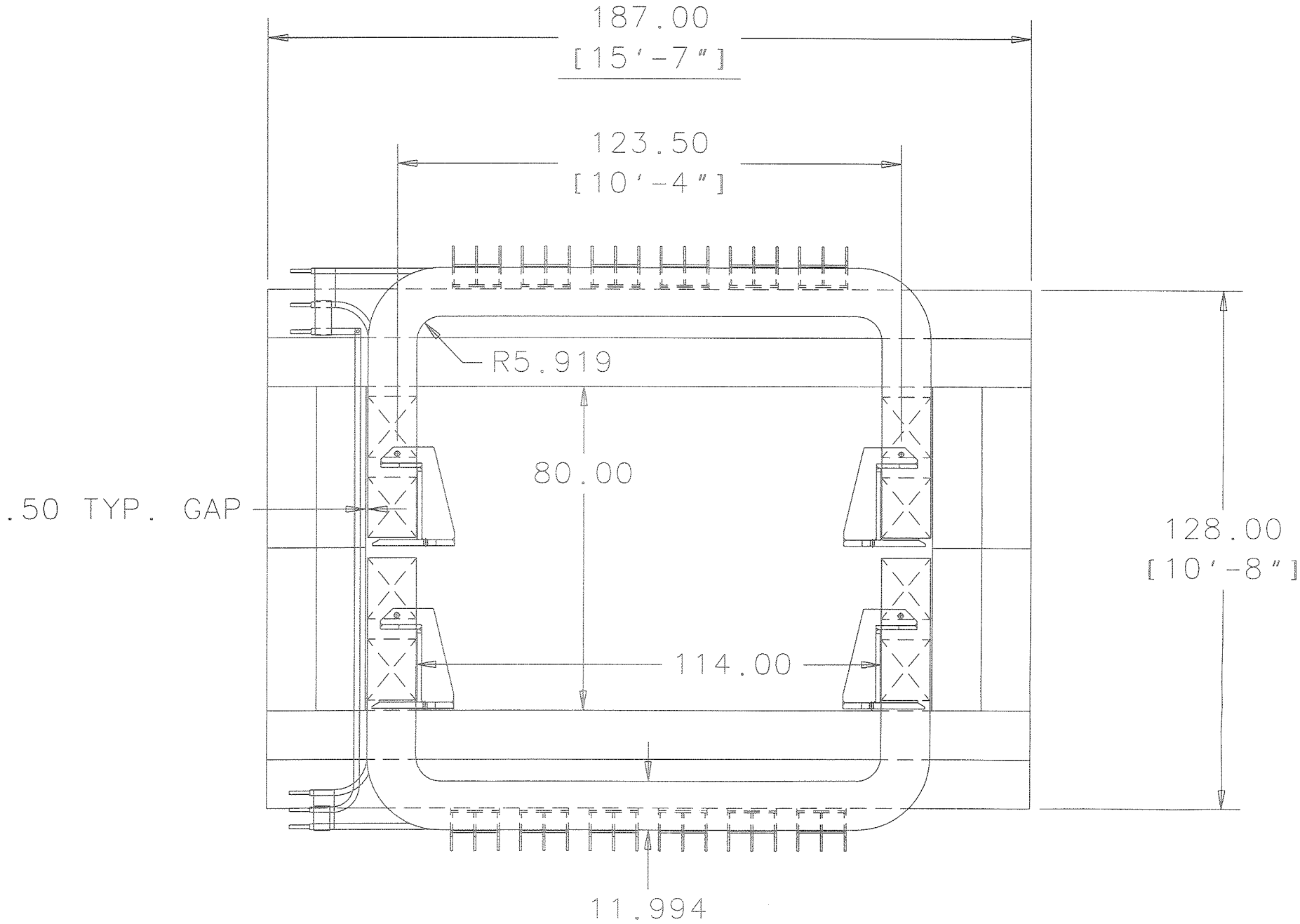

Plotted Thu Feb 9 11:40:07 CST 1995 by dmitchel

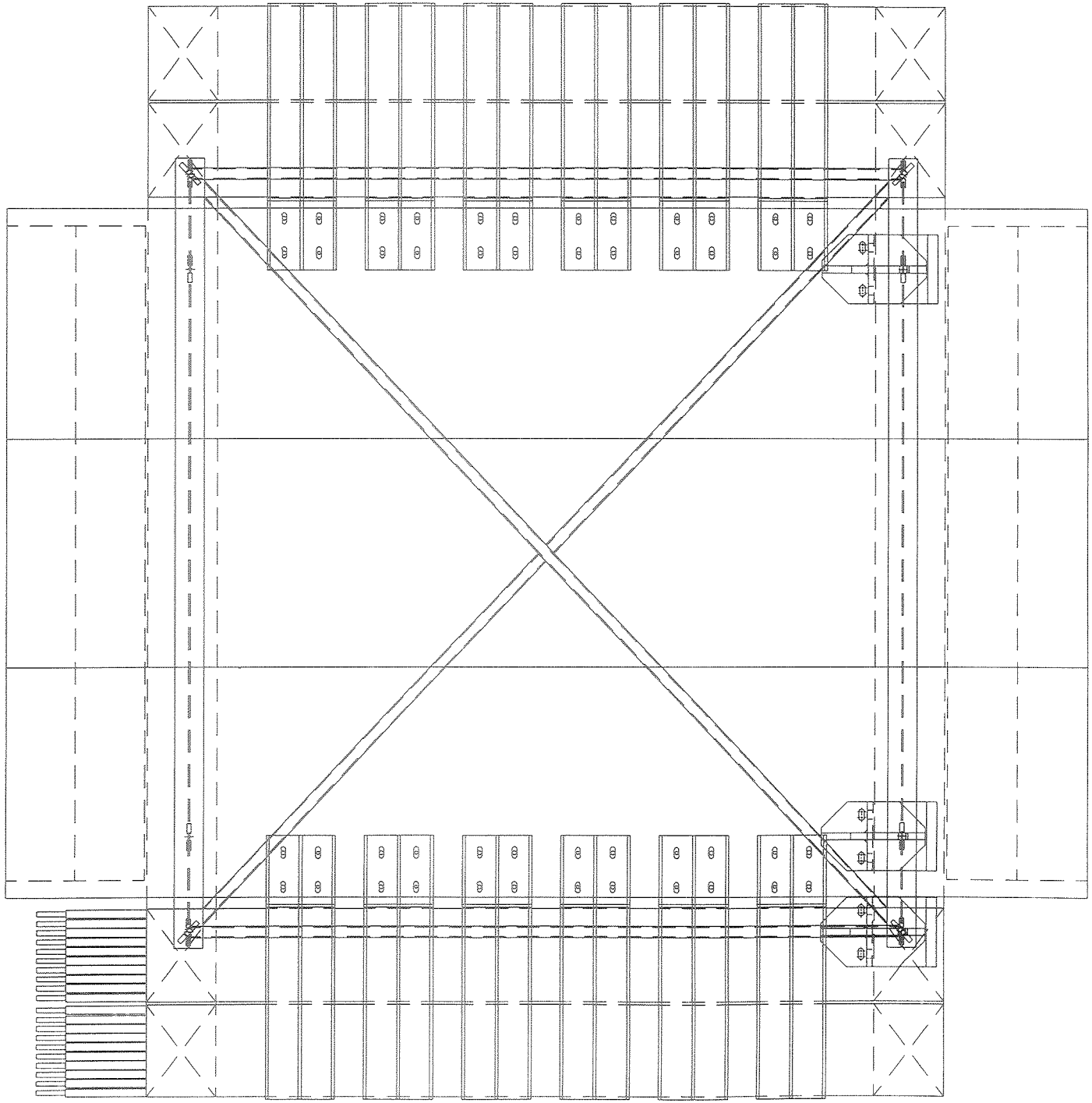

Plotted Wed Feb 15 13:06:40 CST 1995 by dmitchel

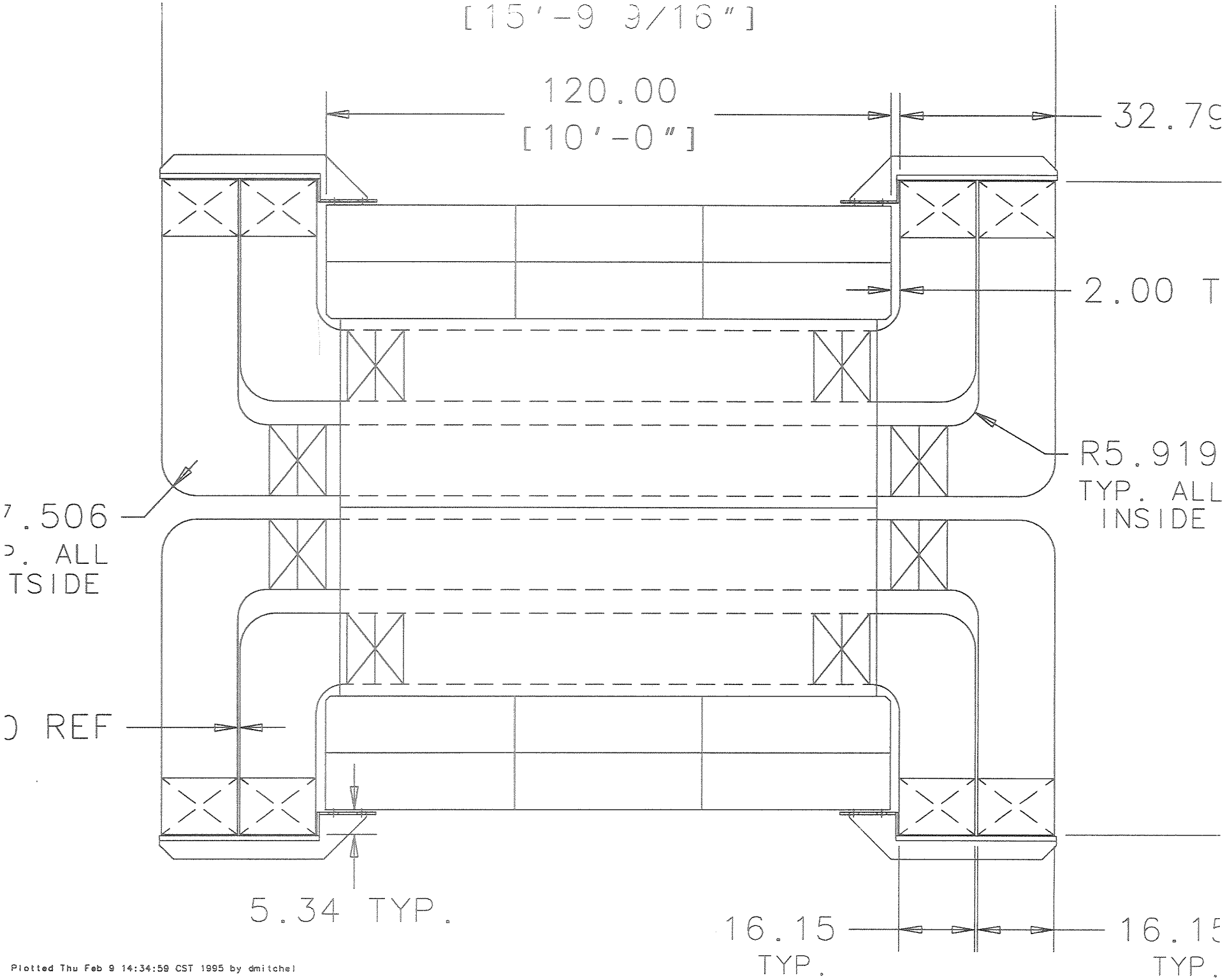

Plotted Thu Feb 9 14:34:59 CST 1995 by dmitchel

Load Test 3/14/95, MAB

ID # 71

Rated load = 12,320 lbs

Test load = 15,400 lbs

D. Mitchell

4, "D" sized blocks @ 4050# each represent the lift load plus the bracket load.

Test was successful!

No failures or signs of fatigue, stress, or extreme flexure.

All four coil brackets tested individually.

LIFTING FIXTURE LOAD TEST PROCEDURES
ANALYSIS MAGNET FOR KTeV

Main Spreader Bar Load Test:

Materials Required:

1. Rectangular shaped spreader bar.
   (w5x16's and TS 5x2x3/16's construction)

2. 8 slings

3. 8 shackles

4. 4, "D" sized concrete blocks (weight = 4050# each)

5. MAB Crane

The fixture shall be free of all paint and primer before the test begins to allow for the proper checking of welded joints.

Position the 4 "D" sized blocks on the floor so that the pick points will be centered below each lifting lug at the four corners of the fixture. Use the outside lifting lugs for the first portion of the test. The inner lifting lugs will be tested after a first successful test.

Place equal length slings on the D sized blocks.

Place four, equal length slings on the lifting fixture and secure in place with four shackles. Use the crane and pick up the lifting fixture. Attach the remaining four shackles to the outer lifting lugs on the bottom of the lifting fixture.

Place the fixture above the D sized blocks and connect the slings to the shackles. Insure that all shackles are mounted properly and that the slings are matched by length and strength.

Raise the hook until the slings are tight but have not lifted the blocks. Inspect the fixture, shackles, and slings to insure proper use.

Raise the fixture and blocks off of the floor to a height of no more than 6 inches and let stand for a minimum of five minutes. Photograph the lift with a Polaroid camera for record. Inspect all welds and lugs for signs of failure.

Repeat this procedure using the inner lifting lugs.

After a successful test, the fixture shall be painted yellow and properly marked for identification. This fixture will then be rated: 12,960 Lbs.

"C" Shaped Lifting Bracket Load Test:

Materials Required:

1. "C" shaped lifting bracket.
   (1018 steel construction)

2. 2 slings

3. 2 shackles

4. 1, "D" sized concrete blocks (weight = 4050#)

5. 1, Large C-Clamp (possibly 2)

6. MAB Crane

The fixture shall be free of all paint and primer before the test begins to allow for the proper checking of welded joints. Do NOT load test the lifting bracket with the rubber sheet glued in place!!

Attach a shackle to the lifting bracket and sling it to the crane hook.

Connect a sling and shackle to a "D" sized concrete block.

Position the lifting bracket above the concrete block and place the sling from the concrete block around the lower plate of the lifting bracket.

Use one, possibly two C-clamps to hold the sling in position directly below the lifting bracket pick point.

Pick up the load to a height no greater than 6 inches. Inspect the bracket for any signs of failure.

Test all four brackets and paint yellow upon successful testing.

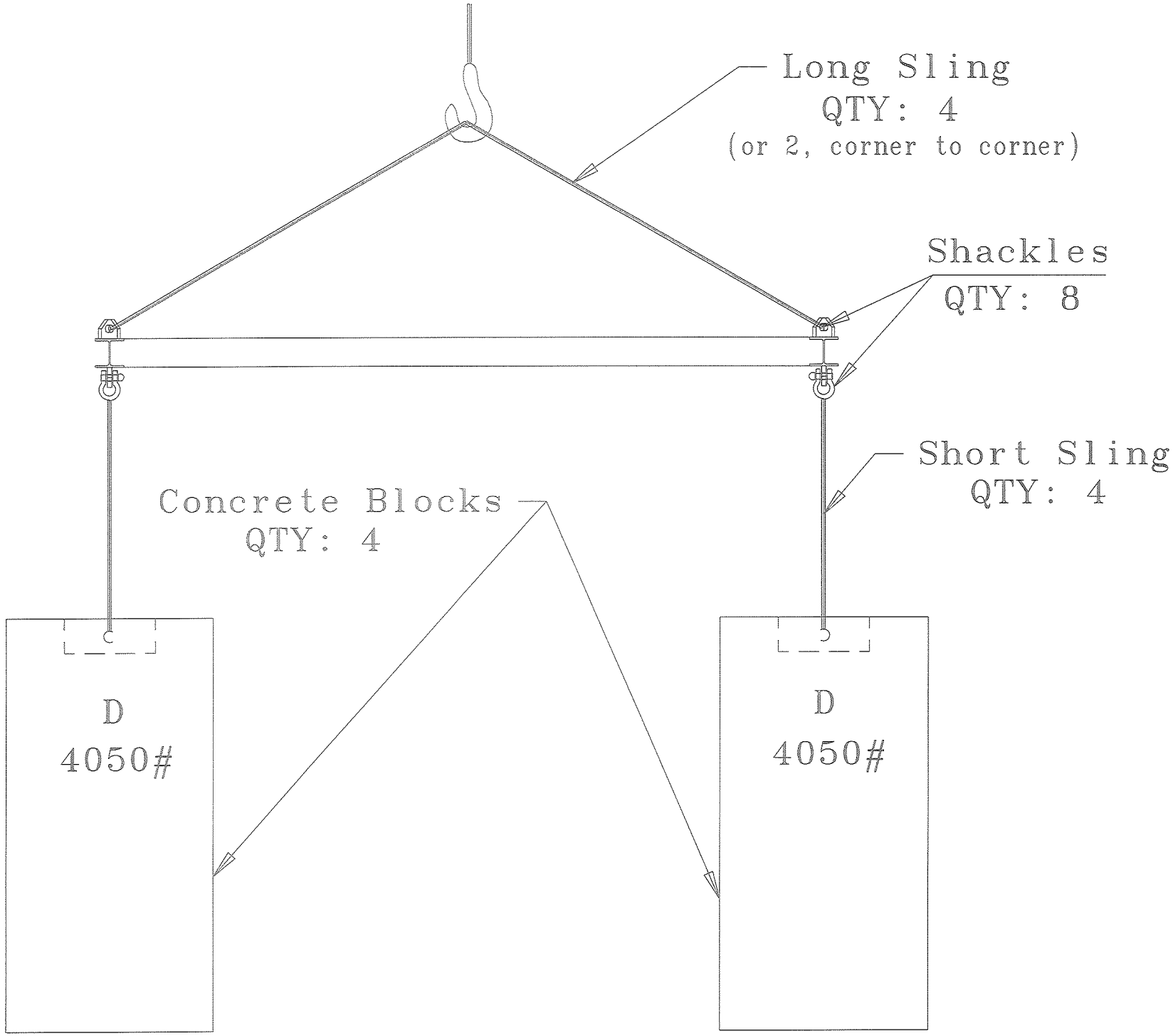

Plotted Mon Mar 13 14:22:58 CST 1995 by dmitchel

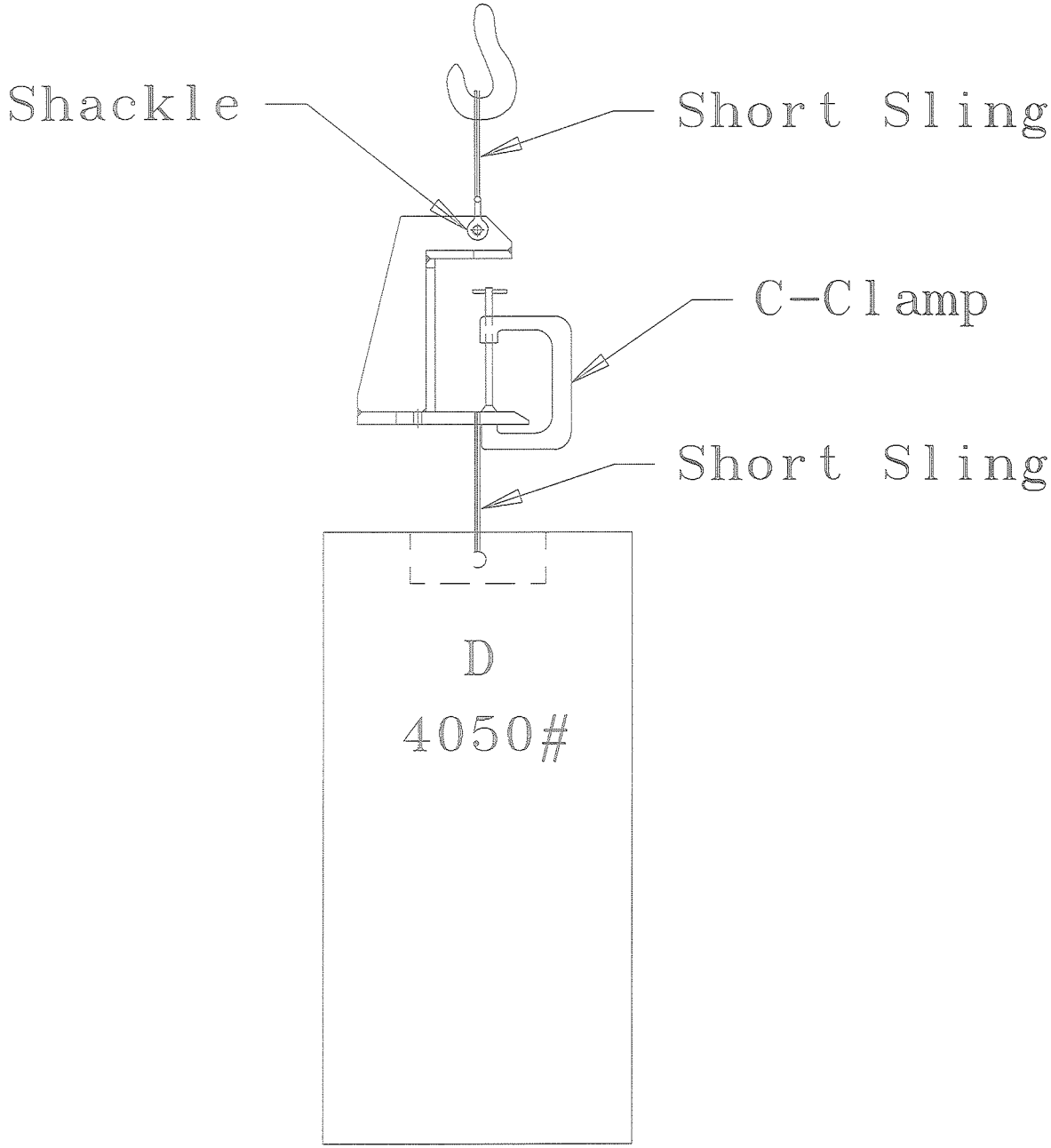

Plotted Mon Mar 13 14:55:24 CST 1995 by dmitchel

LIFTING FIXTURE LOAD TEST PROCEDURES
ANALYSIS MAGNET FOR KTeV

Main Spreader Bar Load Test:

Materials Required:

1. Rectangular shaped spreader bar.
   (w5x16's and TS 5x2x3/16's construction)

2. 8 slings

3. 8 shackles

4. 4, "D" sized concrete blocks (weight = 4050# each)

5. MAB Crane

The fixture shall be free of all paint and primer before the test begins to allow for the proper checking of welded joints.

Position the 4 "D" sized blocks on the floor so that the pick points will be centered below each lifting lug at the four corners of the fixture. Use the outside lifting lugs for the first portion of the test. The inner lifting lugs will be tested after a first successful test.

Place equal length slings on the D sized blocks.

Place four, equal length slings on the lifting fixture and secure in place with four shackles. Use the crane and pick up the lifting fixture. Attach the remaining four shackles to the outer lifting lugs on the bottom of the lifting fixture.

Place the fixture above the D sized blocks and connect the slings to the shackles. Insure that all shackles are mounted properly and that the slings are matched by length and strength.

Raise the hook until the slings are tight but have not lifted the blocks. Inspect the fixture, shackles, and slings to insure proper use.

Raise the fixture and blocks off of the floor to a height of no more than 6 inches and let stand for a minimum of five minutes. Photograph the lift with a Polaroid camera for record. Inspect all welds and lugs for signs of failure.

Repeat this procedure using the inner lifting lugs.

After a successful test, the fixture shall be painted yellow and properly marked for identification. This fixture will then be rated: 12,960 Lbs.

"C" Shaped Lifting Bracket Load Test:

Materials Required:

1. "C" shaped lifting bracket.
   (1018 steel construction)

2. 2 slings

3. 2 shackles

4. 1, "D" sized concrete blocks (weight = 4050#)

5. 1, Large C-Clamp (possibly 2)

6. MAB Crane

The fixture shall be free of all paint and primer before the test begins to allow for the proper checking of welded joints. Do NOT load test the lifting bracket with the rubber sheet glued in place!!

Attach a shackle to the lifting bracket and sling it to the crane hook.

Connect a sling and shackle to a "D" sized concrete block.

Position the lifting bracket above the concrete block and place the sling from the concrete block around the lower plate of the lifting bracket.

Use one, possibly two C-clamps to hold the sling in position directly below the lifting bracket pick point.

Pick up the load to a height no greater than 6 inches. Inspect the bracket for any signs of failure.

Test all four brackets and paint yellow upon successful testing.

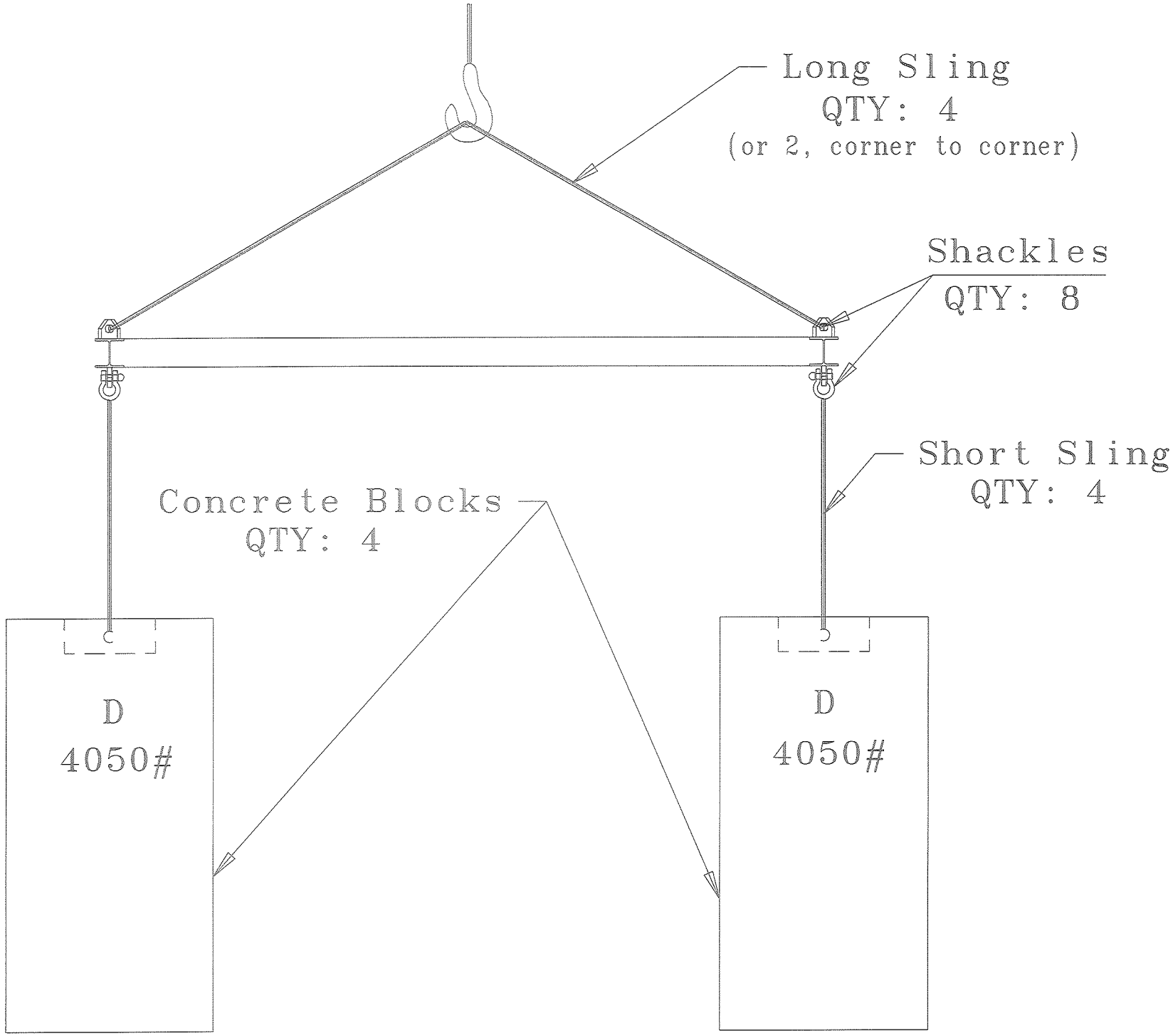

Plotted Mon Mar 13 14:22:58 CST 1995 by dmitchel

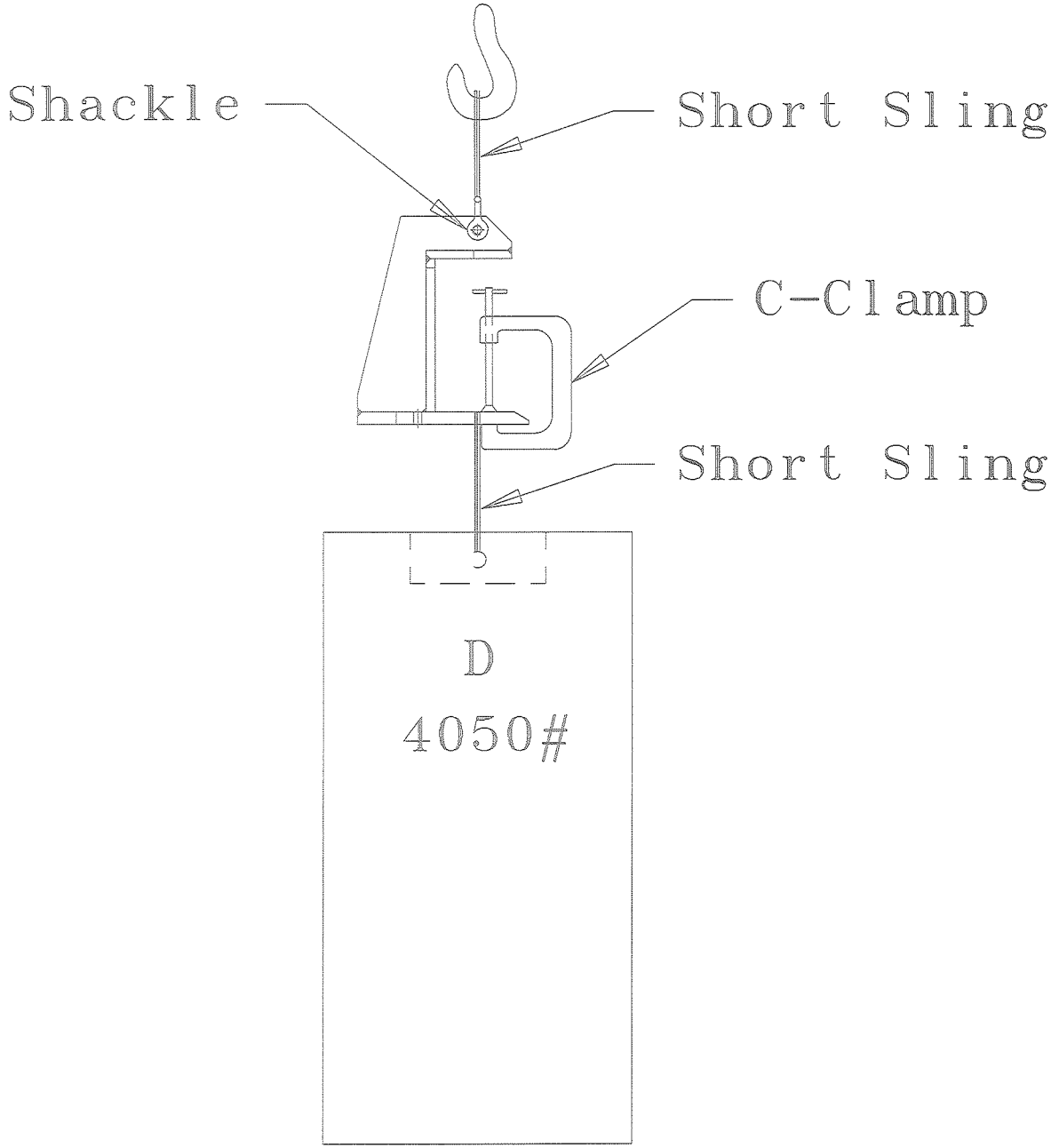

Plotted Mon Mar 13 14:55:24 CST 1995 by dmitchel