LIFTING DEVICE

DEVICE NAME: KTeV TRD Vacuum Lifting Fixture - #~~B~~ 69

ENGINEERING NOTE NUMBER: TRD internal note

DRAWING NUMBER:

APPLICABLE STANDARD: ASME B30.20-1993

RATED LOAD: 200 lb

TEST LOAD: 250 lb

TEST LOAD PERCENT: 125 %

LAST LOAD TEST DATE: 1-9-95 John C. Krider

COLOR: Aluminum

STRESS CALCULATIONS:

Done by: John Krider / Don Goloskie

Date: 12-22-94

Reviewed by: Don Goloskie / [signature]

Date: 1-3-95

REMARKS: Leak test: vacuum system lost 9% of vacuum in 4 minutes after compressed air for pump was disconnected.

Load test: Fixture held 250 lb test load until vacuum had decreased from 28" Hg to 6" Hg.

IDENTIFICATION:

Engineering Note Number & Rated Load Must be Clearly Marked On a Conspicuous Surface.

Copy

FERMILAB
ENGINEERING NOTE

SECTION	PROJECT	SERIAL-CATEGORY	PAGE
			1

SUBJECT: TRD Vacuum Lifting Fixture

NAME: J. Krider/Goloskie

DATE: 12-22-94

REVISION DATE:

Rating per pad - 6" OD, 5" effective diameter

Per ASME B30.20 - 1993, p23

$$UPC = A(Hg/2)$$

UPC = Ultimate pad capacity
A = effective pad area $= \pi r^2 = \pi(2.5\ in)^2 = 19.6\ in^2$
Hg = System vacuum, ≈ 25 inHg typically

$$UPC = (19.6\ in^2)(25\ inHg/2) = 245\ lb$$

For vertical lifts rated load ≤ .25 UPC = **61 lb per pad**

Lifting fixture has 8 pads so total rated load is

$$8 \times 61\ lb = \boxed{490\ lb}$$

The heaviest object to be lifted is a complete wireplane lamination, which weighs ~180 lb.

$$\frac{\text{Expected load}}{\text{Rated load}} = \frac{180\ lb}{490\ lb} = 0.37$$

The fixture should be rated at 200 lb capacity

Tests before certification/operation

1. Vacuum decrease must be <10% in 1 min after compressed air supply is disconnected → Reservoir may be needed
2. Load test to 125% = 250 lb
3. Prepare operators manual

TRD Vacuum Lifting Stress Don Golostein 1/3/95

Material 2x2x 1/16 Alum. Square tubing.

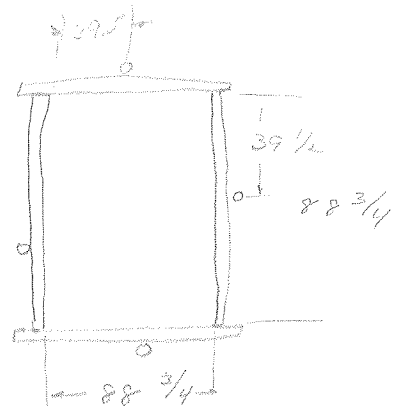

Assume all load is carried by four suction cups located at distance of 39 1/2" from ends. Rated load 200 lb.

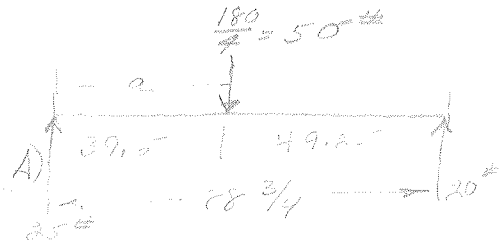

worst case analysis free ends

$M_A = \frac{50}{88\frac{3}{4}}(88\frac{3}{4} - 39.5)$ $.0507(49.25") = 27.7$

$M = R_A(a) = 27.7(39.5") = 1095$ in lbs

$\sigma = \frac{Mc}{I}$ $\frac{1095(1)}{I}$ $I = \frac{2^4 - 1.875^4}{12} = 0.3 in^4$

$\sigma = \frac{1095}{.3} = 3,653$ psi

Tube material is T6063-T52

From Ryerson Catalog Yield = 21,000psi see pg

Safety factor = $\frac{21,000}{3,653} = 5.74$

Req'd. Safety factor is 3 per

ASME B30.20 -1993

Rate for 200# Capacity.

Welding

Don Goloskie 1/3/95

I have inspected the welds and they are of good Quality.

The 2x2 tubing has a continuous weld at its joints.

The 1 1/4 dia Aluminum rods that hold the suction cups are welded at the Top & Bottom only as shown below

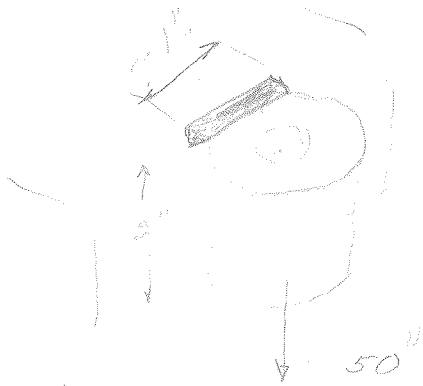

Top & Bottom Butt weld

assume 1/2" of weld Line Butt Dip

assume shear stress controls

Shear Area 1/8 x 1/2 = 1/16

Shear Area x 2 (Top & Bottom weld) = .125 in²

$S = \frac{F}{A} = \frac{50}{.125 \text{ in}^2} = 400 \text{ psi}$

Lowest ultimate shear strength for Aluminum is ≈ 1000 psi.

Comment: fillet weld on sides added 3/16/96
Day.

FERMILAB ENGINEERING NOTE	SECTION	PROJECT	SERIAL-CATEGORY	PAGE 3A

SUBJECT	NAME Don Golosbie	
	DATE 2/20/95	REVISION DATE

Review Item (1)

Check stress on weldment of 2x2 tube

Assume fixed ends

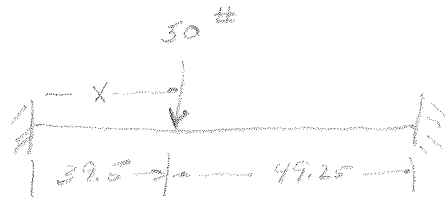

From Marks, 7th edition

Pg 5-31

$$m = -\frac{wl}{2}\left(\frac{x}{l} - \frac{x^2}{l^2}\right) = -\frac{50(88.75)}{2}\left(\frac{39.5}{88.75} - \frac{3}{4}\right)$$

$$m = -2218(-.305) = 676 \text{ in lb}$$

$$\sigma = \frac{mc}{I} = \frac{676(1)}{0.3} = \underline{2253 \text{ psi}}$$

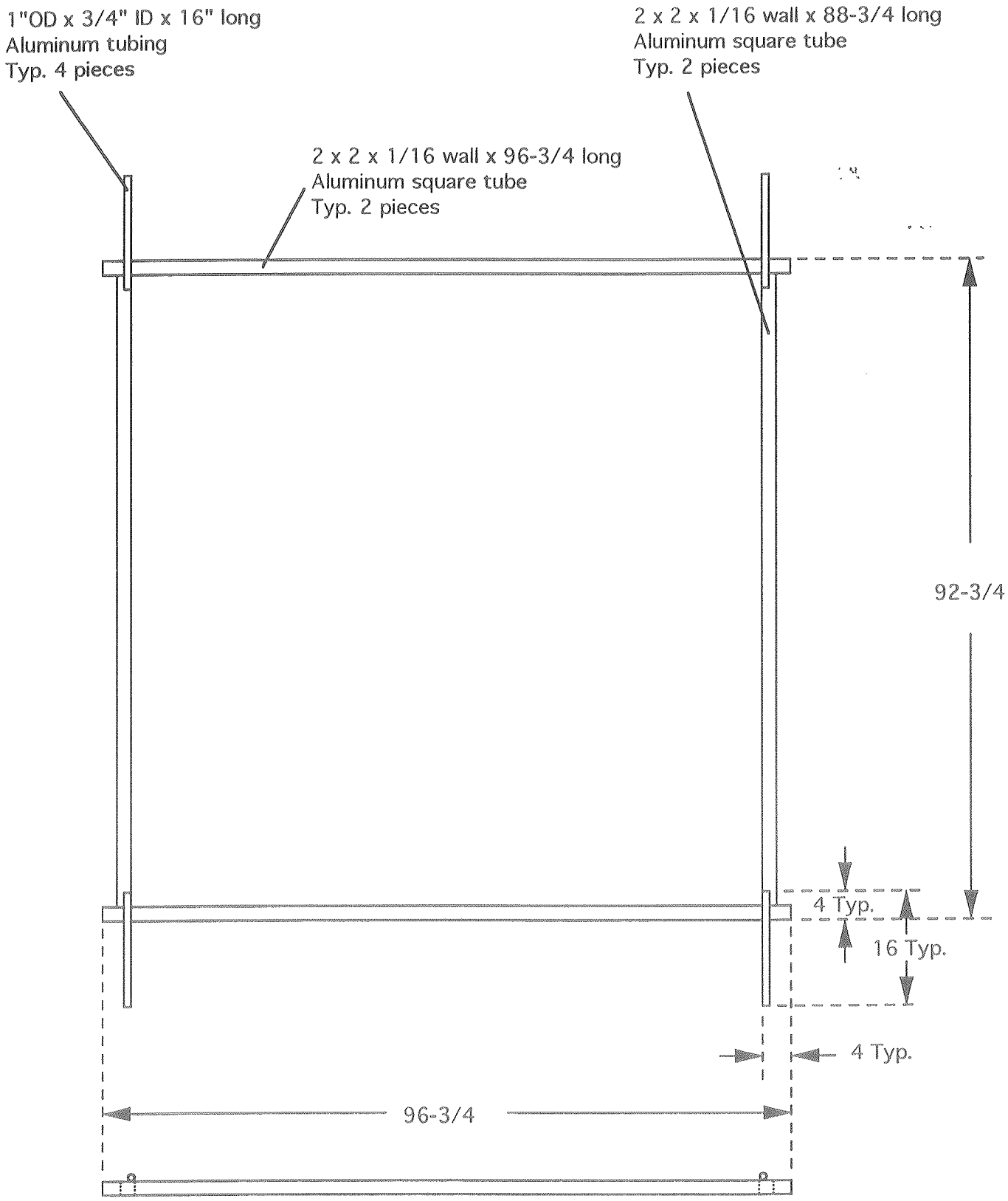

TRD plane transfer frame
Frame subassembly with handles
1 assembly required
J. Krider - 8/19/94

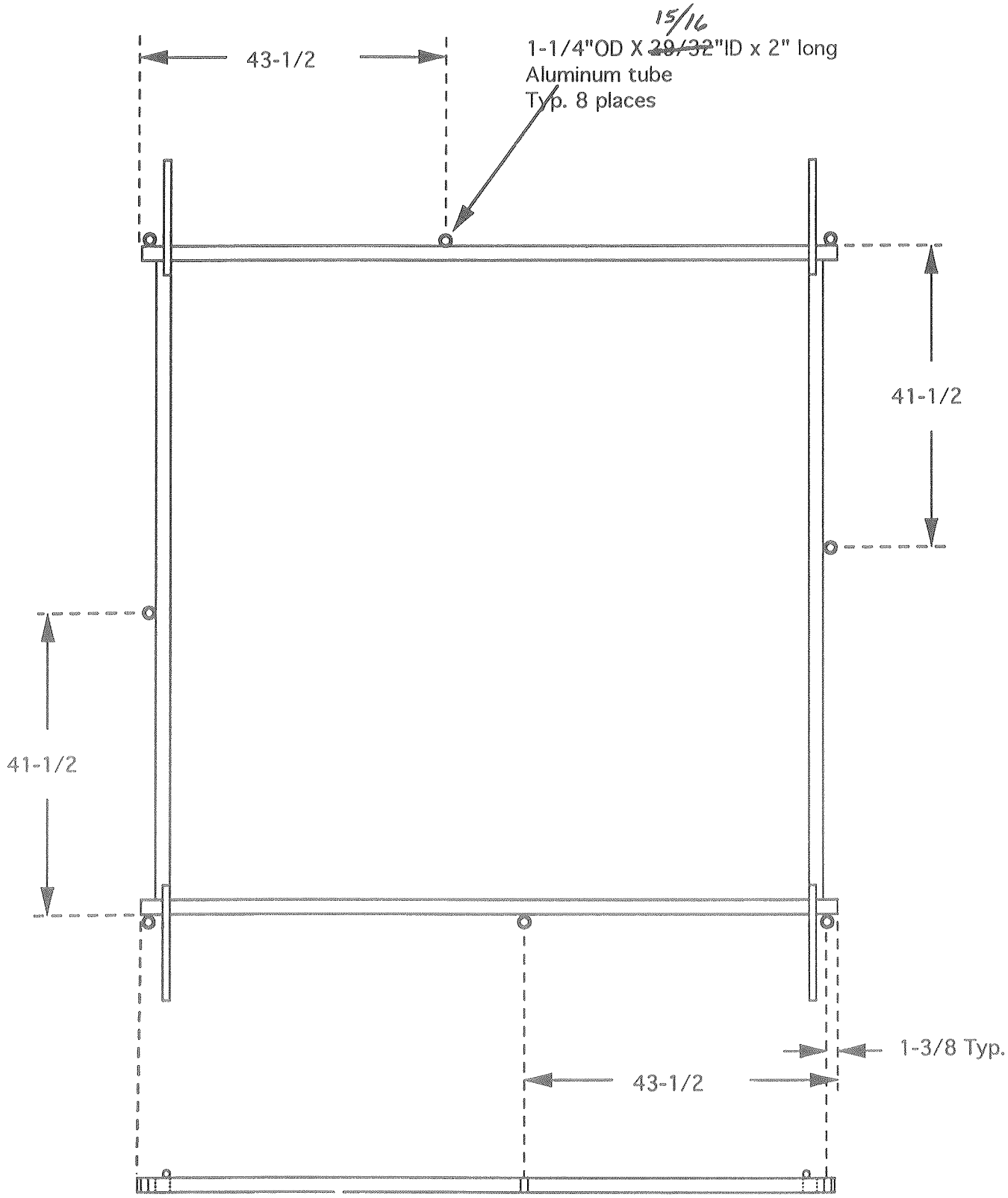

TRD plane transfer frame
Assembly with suction cup guides
1 assembly required
J. Krider - 8/19/94

MECHANICAL PROPERTIES OF ALUMINUM

(Typical Properties—Continued)

Alloy and Temper	Tension Strength, PSI Ultimate	Tension Strength, PSI Yield	% Elong in 2" Thin	% Elong in 2" Thick	Brinell Hardness*	Shear Strength, PSI	Endurance Limit, PSI	Mod of Elast PSI
5454-H32	40,000	30,000	10	18	73	24,000	.....	$10.2x10^6$
5454-H34	44,000	35,000	10	16	81	26,000	.....	$10.2x10^6$
5454-H112	36,000	18,000	18	...	62	23,000	.....	$10.2x10^6$
5456-O	45,000	23,000	24	20	70	27,000	22,000	$10.3x10^6$
5456-H111	47,000	33,000	18	...	75	27,000	24,000	$10.3x10^6$
5456-H112	45,000	24,000	22	...	70	27,000	.....	$10.3x10^6$
5456-H321	51,000	37,000	16	....	90	30,000	23,000	$10.3x10^6$
5457-O	19,000	7,000	22	...	32	12,000	.....	$10.0x10^6$
5457-H38	30,000	27,000	6	...	55	18,000	.....	$10.0x10^6$
6061-O	18,000	8,000	25	30	30	12,000	9,000	$10.0x10^6$
6061-T4, T451	35,000	21,000	22	25	65	24,000	14,000	$10.0x10^6$
6061-T6, T651	45,000	40,000	12	17	95	30,000	14,000	$10.0x10^6$
‡6061-O	17,000	7,000	25	...	...	11,000	.....	$10.0x10^6$
‡6061-T4, T451	33,000	19,000	22	...	...	22,000	.....	$10.0x10^6$
‡6061-T6, T651	42,000	37,000	12	...	...	27,000	.....	$10.0x10^6$
6063-O	13,000	7,000	...	...	25	10,000	8,000	$10.0x10^6$
6063-T4	25,000	13,000	22	...	...	16,000	.....	$10.0x10^6$
6063-T5	27,000	21,000	12	22	60	17,000	10,000	$10.0x10^6$
6063-T6	35,000	31,000	12	18	73	22,000	10,000	$10.0x10^6$
6063-T832	42,000	39,000	12	...	95	27,000	.....	$10.0x10^6$
6262-T9	58,000	55,000	...	10	120	35,000	13,000	$10.0x10^6$
7075-O	33,000	15,000	17	16	60	22,000	17,000	$10.4x10^6$
‡7075-T6, T651	83,000	73,000	11	11	150	48,000	23,000	$10.4x10^6$
‡7075-O	32,000	14,000	17	...	...	22,000	.....	$10.4x10^6$
‡7075-T6, T651	76,000	67,000	11	...	...	46,000	.....	$10.4x10^6$
7079-T6, T651	78,000	68,000	...	14	145	45,000	23,000	$10.4x10^6$
7178-O	33,000	15,000	15	16	60	22,000	.....	$10.4x10^6$
(2)7178-T6, T651	88,000	78,000	10	11	160	52,000	22,000	$10.4x10^6$

*500-kg. load; 10 mm. Ball. ‡These alloys are Alclad.

(1) Extruded products will have strength approx. 10% higher

AISI & SAE STANDARD STEEL COMPOSITIONS

(Revised August, 1977)

Nonresulphurized Carbon Steels
Manganese 1% Max.
Heat Chemical Ranges and Limits

AISI No.*	C	Mn	P Max	S Max	SAE No.
1008	0.10 max	0.30-0.50	.040	.050	1008
1010	0.08-0.13	0.30-0.60	.040	.050	1010
1012	0.10-0.15	0.30-0.60	.040	.050	1012
1015	0.13-0.18	0.30-0.60	.040	.050	1015
1016	0.13-0.18	0.60-0.90	.040	.050	1016
1017	0.15-0.20	0.30-0.60	.040	.050	1017
1018	0.15-0.20	0.60-0.90	.040	.050	1018
1019	0.15-0.20	0.70-1.00	.040	.050	1019
1020	0.18-0.23	0.30-0.60	.040	.050	1020
M1020	0.17-0.24	0.25-0.60	.040	.050	..
1021	0.18-0.23	0.60-0.90	.040	.050	1021
1022	0.18-0.23	0.70-1.00	.040	.050	1022
1023	0.20-0.25	0.30-0.60	.040	.050	1023
1025	0.22-0.28	0.30-0.60	.040	.050	1025

(Continued)

AISI & SAE STANDARD STEEL COMPOSITIONS

(Revised August, 1977)

Nonresulphurized Carbon Steels
Manganese 1% Max.
Heat Chemical Ranges and Limits

AISI No.*	C	Mn	P Max	S Max	SAE No.
(Continued)					
1026	0.22-0.28	0.60-0.90	.040	.050	1026
1029	0.25-0.31	0.60-0.90	.040	.050	
1030	0.28-0.34	0.60-0.90	.040	.050	1030
1035	0.32-0.38	0.60-0.90	.040	.050	1035
1037	0.32-0.38	0.70-1.00	.040	.050	1037
1038	0.35-0.42	0.60-0.90	.040	.050	1038
1039	0.37-0.44	0.70-1.00	.040	.050	1039
1040	0.37-0.44	0.60-0.90	.040	.050	1040
1042	0.40-0.47	0.60-0.90	.040	.050	1042
1043	0.40-0.47	0.70-1.00	.040	.050	1043
1044	0.43-0.50	0.30-0.60	.040	.050	1044
M1044	0.40-0.50	0.25-0.60	.040	.050	
1045	0.43-0.50	0.60-0.90	.040	.050	1045
1046	0.43-0.50	0.70-1.00	.040	.050	1046
1049	0.46-0.53	0.60-0.90	.040	.050	1049
1050	0.48-0.55	0.60-0.90	.040	.050	1050
1053	0.48-0.55	0.70-1.00	.040	.050	
1055	0.50-0.60	0.60-0.90	.040	.050	1055
1060	0.55-0.65	0.60-0.90	.040	.050	1060
1070	0.65-0.75	0.60-0.90	.040	.050	1070
1078	0.72-0.85	0.30-0.60	.040	.050	1078
1080	0.75-0.88	0.60-0.90	.040	.050	1080
1084	0.80-0.93	0.60-0.90	.040	.050	1084
1090	0.85-0.98	0.60-0.90	.040	.050	1090
1095	0.90-1.03	0.30-0.50	.040	.050	1095
1513	0.10-0.16	1.10-1.40	.040	.050	1513
1522	0.18-0.24	1.10-1.40	.040	.050	1522
1524	0.19-0.25	1.35-1.65	.040	.050	1524
1526	0.22-0.29	1.10-1.40	.040	.050	1526
1527	0.22-0.29	1.20-1.50	.040	.050	1527
1541	0.36-0.44	1.35-1.65	.040	.050	1541
1548	0.44-0.52	1.10-1.40	.040	.050	1548
1551	0.45-0.56	0.85-1.15	.040	.050	1551
1552	0.47-0.55	1.20-1.50	.040	.050	1552
1561	0.55-0.65	0.75-1.05	.040	.050	1561
1566	0.60-0.71	0.85-1.15	.040	.050	1566

Prefix M denotes merchant quality grades with wider carbon and manganese ranges than standard steels.

When Silicon is required, the following ranges and limits are commonly used for basic open hearth steel grades:

Standard Steel Designation	Silicon Ranges or Limits
Up to 1015 Excl	0.10 max
1015 to 1025 incl	0.10 max., 0.10-0.20, or 0.15-0.30
Over 1025	0.10-0.20, or 0.15-0.30

When lead or copper are required, they are added elements to a standard steel. Lead is generally added in amounts ranging from 0.15 to 0.35%.

AISI & SAE STANDARD STEEL COMPOSITIONS

Resulphurized Carbon Steels
Heat Chemical Ranges and Limits

AISI No.	C	Mn	P Max.	S Max.	SAE No.
1110	.08-.13	0.30-0.60	.040	.08-.13	1110
1117	.14-.20	1.00-1.30	.040	.08-.13	1117
1118	.14-.20	1.30-1.60	.040	.08-.13	1118
1137	.32-.39	1.35-1.65	.040	.08-.13	1137

(Continued)

FERMILAB
ENGINEERING NOTE

SECTION	PROJECT	SERIAL-CATEGORY	PAGE

SUBJECT: TRD Vacuum Lifting Fixture - stress

NAME: J. Krider

DATE: 12-22-94

REVISION DATE:

Largest stress occurs when load is suspended from 2 diagonally opposite corners. Stress can be approximated beam of length equal to 2 sides of frame loaded with 45 lb (1/4 of total load) at center and having fixed ends

$$y_{max} = \frac{Wl^3}{192EI} = \frac{(45\,lb)(180\,in)^3}{192(10^7\,lb/in^2)(.3\,in^4)} = \boxed{0.46\,in} \text{ at center}$$

$$\sigma_{max} = \frac{Wl}{8Z} = \frac{(45\,lb)(90\,in)}{8(.3\,in^3)} = \boxed{3400\,lb/in^2} \text{ at center and ends}$$

This is about 50% of the recommended maximum of 1/3 the yield strength of aluminum tubes

10'

KTEV TRD

VACUUM LIFTING FIXTURE

Engineering Note #69

Designed & Manf'd. by John Krider

Rated Load = 200 lbs.

Tested & App'd.: 1/9/95

WARNING

1. **DO NOT EXCEED LOAD OF 200 lbs.**
2. DO NOT OPERATE IF PARTS ARE DAMAGED OR MISSING
3. DO NOT OPERATE IF THERE IS INADEQUATE VACUUM
4. DO NOT LEAVE LOADS UNATTENDED
5. DO NOT LIFT LOADS OVER PEOPLE
6. DO NOT LIFT PEOPLE
7. DO NOT ALTER THIS LIFTING DEVICE
8. DO NOT REMOVE THIS LABEL