LIFTING DEVICE

DEVICE NAME: Drift chamber lifting fixture

ENGINEERING NOTE NUMBER: 67

DRAWING NUMBER: Sketch on page 2 of calcs.

APPLICABLE STANDARD: DOE Hoisting and Rigging Manual Below-the-hook Lifting Devices & ANSI/ASME B30.20

RATED LOAD: 2,000 Lbs

TEST LOAD: 2,650 Lbs

TEST LOAD PERCENT: 132.5%

LAST LOAD TEST DATE: October 12, 1994

COLOR:

STRESS CALCULATIONS:

Done by: A. M. Stefanik

Date: Sept. 26, 1994

Reviewed by: Zhijing Tang

Date: Sept. 27. 1994.

REMARKS:

IDENTIFICATION:

Engineering Note Number & Rated Load Must be Clearly Marked On a Conspicuous Surface.

FERMILAB ENGINEERING NOTE	SECTION	PROJECT E872	SERIAL-CATEGORY	PAGE 1

SUBJECT	NAME	
LIFTING FIXTURE FOR DRIFT CHAMBERS. ANALYSIS OF EXISTING FIXTURE.	A. M. Stefanik	
	DATE 9/23/94	REVISION DATE

1.0 DESIGN BASIS

1.1 DOE HOISTING AND RIGGING MANUAL, "BELOW-THE-HOOK LIFTING DEVICES", NO. 9, 4/93 REV – CONTROLLING DOCUMENT

1.2 ANSI/ASME B30.20 – INCORPORATED BY REFERENCE IN THE DOCUMENT LISTED IN 1.1.

2.0 MATERIAL OF CONSTRUCTION – CARBON STEEL

3.0 MATERIAL YIELD STRESSES, F_y –

FOR A36 STRUCTURAL STEEL, $F_y = 36{,}000$ psi
FOR CARBON STEEL OF UNKNOWN SPECIFICATION, $F_y = ?$

4.0 ALLOWABLE STRESSES –

FOR A36 STRUCTURAL STEEL –

PER ANSI/ASME B30.20, 20-1.2.2, THE ALLOWABLE STRESS, F, FOR TENSION, COMPRESSION, SHEAR AND BEARING IS 36,000/3 = 12,000 psi.

FOR CARBON STEEL OF UNKNOWN SPECIFICATION –

FOLLOW THE PRACTICE IN ASME B31.3 FOR PIPING SUPPORTS, F = 12,000 psi

5.0 REQUESTED LOAD RATING = 2,000 Lbs

6.0 ESTIMATE FIXTURE WEIGHT
ASSUME C6x13 CHANNELS.

CHANNELS: $2 * 192.75\ \cancel{in} * \frac{\cancel{ft}}{12\ \cancel{in}} * 13\ \frac{Lbs}{\cancel{ft}} = 420$ Lbs

CRANE LIFT LUG: $4\ in * 6\ in * 1\ in * 0.282\ Lb/in^3 = 7$ Lbs

LOAD LUGS: $4\ in \times 5\ in \times 1\ in \times 2 * 0.282\ Lb/in^3 = 12$ Lbs

END PLATES: $4.1875\ in \times 6\ in \times 0.375\ in * 2 \times 0.282\ Lb/in^3 = 6$ Lbs

COMPRESSION FLANGE PLATE: $2*(68.25\ in)*(0.25\ in)*4\ in*0.282\ Lb/in^3 = 40$ Lbs

4 END BARS: $4*15\ in \times 2.5\ in * 0.25\ in * 0.282\ Lb/in^3 = 11$ Lbs

1 TENSION FLANGE BAR: $2*(58.125\ in)*0.25\ in*1\ in*0.282\ Lb/in^3 = 9$ Lbs

TOTAL WEIGHT = Σ = 505 Lbs. USE 525 Lbs.

567461

567461

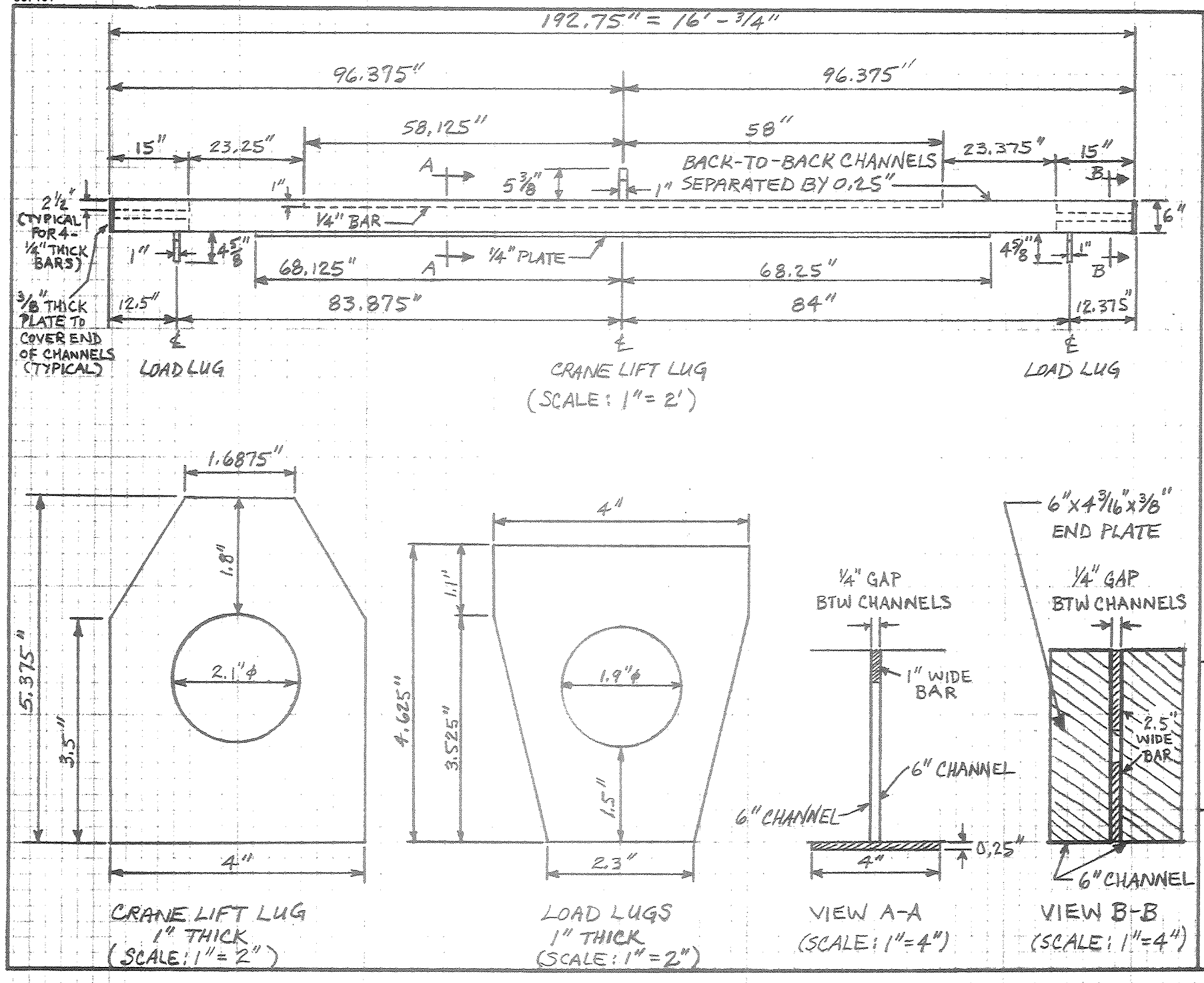

FERMILAB ENGINEERING NOTE

SUBJECT: SKETCH OF LIFTING FIXTURE

SECTION

PROJECT: E872

SERIAL-CATEGORY

PAGE: 2

NAME: AMS

DATE: 9/23/94

REVISION DATE

7.0 FREE BODY DIAGRAM

THERE ARE NO LATERAL LOADS.

THE FIXTURE HAS NO LATERAL SUPPORT.

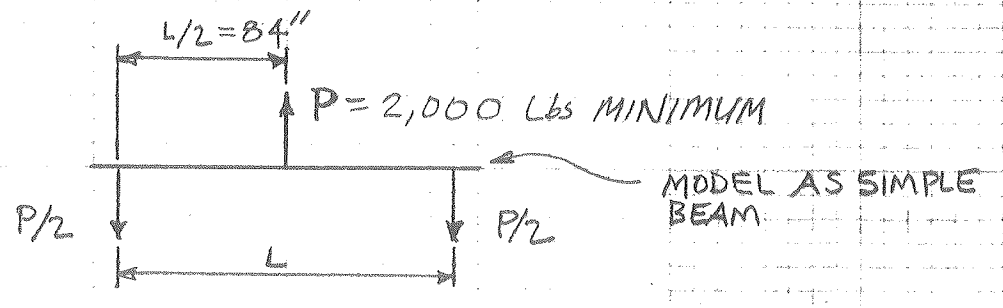

8.0 BACK-TO-BACK CHANNELS ASSUME C6 x 8.2 CHANNELS.

ASSUME C6x8.2 CHANNELS.

- BENDING STRESS DUE TO APPLIED LOAD P:

MAXIMUM MOMENT = $M_{MAX} = PL/4$ AT POINT OF LOAD

$$f_{b_P} = \frac{M_{MAX}}{S} = \frac{PL}{4S} = \frac{2{,}000\ \text{Lbs}\,(2\times 84\ \text{in})}{4*(2*4.38\ \text{in}^{3/2})} = 9{,}600\ \text{psi}$$

BENDING STRESS DUE TO WEIGHT:

$$f_{b_w} = \frac{M_{MAX}}{S} = \frac{wL^2}{8S} =$$

$$w \doteq 525\ \text{Lbs}/(2*84\ \text{in}) = 3.125\ \text{Lbs/in}$$

$$f_{b_w} = \frac{3.125\ \text{Lbs/in}\,(2*84)^2\ \text{in}^2}{8*(2*4.38\ \text{in}^{3/2})} = 1{,}260\ \text{psi}$$

- TOTAL BENDING STRESS = 9,600 + 1,260 = 10,860 psi < 12,000 OK
- SHEAR STRESS DUE TO APPLIED LOAD P:

WEB CROSS SECTIONAL AREA = $(0.2\ \text{in})(6-2*0.343)\ \text{in} = 1.06\ \text{in}^2$

$$f_{v_P} = \frac{V}{A} = \frac{(P/2)}{A} = \frac{(2{,}000/2)\ \text{Lbs}}{2(1.06\ \text{in}^2)} = 475\ \text{psi}$$

- SHEAR STRESS DUE TO WEIGHT:

$$f_{v_W} = \frac{V}{A} = \frac{wL}{2A} = \frac{3.125\ \text{Lbs/in}*2(84\ \text{in})}{2*2(1.06)\ \text{in}^2} = 125\ \text{psi}$$

TOTAL SHEAR STRESS = 475 + 125 = 600 psi < 12,000 OK

- DEFLECTION DUE TO APPLIED LOAD P:

$$\Delta \text{ MAX (AT LOAD LUG)} = \frac{PL^3}{48EI}$$

$$= \frac{2{,}000\ \cancel{lbs} \times (2\times 84)^3\ in^{\cancel{3}}}{48\,(29{,}000{,}000\ \cancel{lbs}/in^2)(2\times 13.1\ in^{\cancel{2}\,4})} = 0.26\ in$$

- DEFLECTION DUE TO WEIGHT:

$$\Delta \text{ MAX (AT LOAD LUG)} = \frac{5wL^4}{384EI}$$

$$= \frac{5\,(3.125\ \cancel{lb}/in)(2\times 84)^4\ in^{\cancel{4}\,3}}{384\,(29{,}000{,}000\ \cancel{lb}/in^2)(2\times 13.1\ in^{\cancel{2}\,4})} = 0.05\ in$$

- TOTAL DEFLECTION AT LOAD LUG = 0.26 + 0.05 = 0.31 in OK

- CALCULATE THE ALLOWABLE FLANGE COMPRESSION STRESS FOR A SIMPLE BEAM WITH NO LATERAL SUPPORT FOLLOWING AISC RECOMMENDATIONS:

- FOLLOW AISC "SPECIFICATION FOR THE DESIGN, FABRICATION AND ERECTION OF STRUCTURAL STEEL FOR BUILDINGS" TO DEFINE THE ALLOWABLE BENDING STRESS, IN THE ABSENCE OF AXIAL FORCE, FOR A SIMPLE BEAM WITHOUT LATERAL SUPPORT.

WHEN $\sqrt{\frac{102{,}000\ C_b}{F_y}} \leq \frac{L}{r_T} \leq \sqrt{\frac{510{,}000\ C_b}{F_y}}$

THEN, $F_b = \left[\frac{2}{3} - \frac{F_y (L/r_T)^2}{1{,}530{,}000\ C_b}\right] F_y$

ACCORDING TO "DESIGN OF WELDED STRUCTURES" BY OMER W. BLODGETT, r_y OF THE ENTIRE SECTION CAN BE CONSERVATIVELY SUBSTITUTED FOR r_T IF THE SHAPE IS SYMMETRICAL ABOUT ITS X-AXIS OF BENDING (5TH PRINTING, 1972, PG 3.2-10). THIS FIXTURE IS SYMMETRICAL ABOUT ITS X-AXIS (BACK-TO-BACK CHANNELS). $C_b = 1$ WHEN MOMENT IN SPAN EXCEEDS THAT AT BOTH ENDS.

THUS, $\sqrt{\frac{102{,}000(1)}{36}} \leq \frac{2\,(84\ in)}{2.34\ in} \leq \sqrt{\frac{510{,}000(1)}{36}}$

$53 \leq 72 \leq 119$ OK

567461

$$\therefore F_b = \left[2/3 - 36(72)^2/(1{,}530{,}000(1)) \right] 36{,}000$$

$$= 0.545(36{,}000) = 19{,}600 \text{ psi} > 12{,}000 \text{ psi } \underline{\underline{OK}}$$

ANOTHER FORMULA IS:

$$F_b = \frac{12{,}000\, C_b}{\ell d / A_f} = \frac{12{,}000(1)}{\frac{2(84 \text{ in})(6 \text{ in})}{2(0.66 \text{ in}^2)}} = 15.7 \text{ ksi} > 12{,}000 \ \underline{\underline{OK}}$$

CONCLUSION: THE BENDING STRESS IN THE COMPRESSION FLANGES OF THE BACK-TO-BACK CHANNELS IS BELOW THE AISC ALLOWABLE FOR BEAMS WITHOUT LATERAL SUPPORT.

NOTE: THE LIFTING FIXTURE HAS A 1/4" THICK PLATE WELDED TO A PORTION OF THE COMPRESSION FLANGES ON THE BACK-TO-BACK CHANNELS AS SHOWN IN THE SKETCH. THIS PLATE IS NOT INCLUDED IN THE ANALYSIS BECAUSE THE BACK-TO-BACK CHANNELS CAN CARRY THE LOAD WITH COMPRESSION FLANGE BUCKLING.

NOTE: THE CALCULATIONS ARE BASED ON THE ASSUMPTION THAT THE LOAD IS APPLIED VERTICALLY TO THE LOAD LUGS.

- CALCULATE THE MINIMUM FLANGE THICKNESS REQUIRED TO CARRY THE TENSION LOAD OF EACH LUG WITHOUT USING A STIFFENER:
ALL 3 LUGS HAVE THE SAME DIMENSIONS (4"x1") WHERE THEY WELD TO THE FLANGE. THUS, IT IS ONLY NECESSARY TO ANALYZE THE CRANE LIFT LUG. FOLLOW THE METHOD IN "DESIGN AND BEHAVIOR OF STEEL STRUCTURES" BY C.G. SALMON AND J.E. JOHNSON, 3RD EDITION, 1990, PAGE 893:
TENSION CALCULATION —

$$t_{fc} = 0.4\sqrt{\frac{P_{bf}}{F_{yc}}} = 0.4\sqrt{\frac{5/3(2{,}000)}{12{,}000}} = 0.21'' < 0.343'',$$ THE AVERAGE FLANGE THICKNESS $\underline{\underline{OK}}$

COMPRESSION CALCULATIONS –

LOCAL WEB YIELDING...

$$P_{bf} = (5K + t_{fb})(0.66\,F_{yc})\,t_{wc}$$

FOR 6" CHANNEL: $K = 13/16''$, $t_{wc} = 0.2''$; $t_{fb} = 1''$

$$5/3\,P = [5(13/16) + 1](12{,}000)(0.2) \Rightarrow P = 7{,}290 \text{ Lbs} > 2{,}000 \quad \underline{\underline{OK}}$$

WEB CRIPPLING...

$$P_{bf} = 67.5\,t_{wc}^2\left[1 + 3\left(\frac{t_{fb}}{d}\right)\left(\frac{t_{wc}}{t_{fc}}\right)^{1.5}\right]\sqrt{\frac{F_{yc}\,t_{fc}}{t_{wc}}}$$

FOR 6" CHANNEL: $d = 6''$, $t_{fc} = 0.343''$ – AVERAGE

$$5/3\,P = 67.5(0.2^2\,in^2)\left[1 + 3\left(\frac{1}{6}\right)\left(\frac{0.2}{0.343}\right)^{1.5}\right]\sqrt{\frac{12(0.343)}{0.2}}$$

$$P = 8{,}985 \text{ Lbs} > 2{,}000 \text{ Lbs} \quad \underline{\underline{OK}}$$

WEB COMPRESSION BUCKLING...

OVERALL WEB BUCKLING NEED NOT BE CHECKED WHEN ONLY ONE FLANGE IS SUBJECTED TO A CONCENTRATED LOAD.

CONCLUSION: A STIFFENER IS NOT NEEDED FOR THE BACK-TO-BACK CHANNELS TO CARRY THE 2,000 LB FORCE.

9.0 CRANE LIFT LUG

LOAD = P = 2,000 Lbs

LUG TENSION...

$$f_t = \frac{P}{A}$$

$$A = (4'' - 2.1'')(1'') = 1.9\ in^2$$

THICKNESS

$$f_t = \frac{2{,}000\ Lbs}{1.9\ in^2} = 1{,}050\ psi < 12{,}000\ \underline{OK}$$

LUG SHEAR TEAROUT...

$$f_v = \frac{V}{A}$$

$$A = 1.8''(1'') = 1.8\ in^2$$

$$f_v = \frac{2{,}000\ Lbs}{1.8\ in^2} = 1{,}110\ psi < 12{,}000\ \underline{OK}$$

LUG BEARING...

$$f_p = \frac{P}{A}$$

A = PIN DIAMETER * LUG THICKNESS

TYPICAL MINIMUM PIN DIAMETER FOR 2,000 Lb SHACKLE = 7/16".
USE 1/4" PIN DIAMETER TO CALCULATE LUG BEARING STRESS.

$$A = 0.25''(1'') = 0.25\ in^2$$

$$f_p = \frac{2{,}000\ Lbs}{0.25\ in^2} = 8{,}000\ psi < 12{,}000\ \underline{OK}$$

10.0 LOAD LUG

LOAD = 1,000 Lbs

LUG TENSION...

$f_t = P/A$

CALCULATE MINIMUM DISTANCE BETWEEN THE 1.9"ϕ HOLE THE EDGE OF THE LUG.

$\tan\alpha = 3.525/0.85$
$\Rightarrow \alpha = 76.443^\circ$

CALCULATE DISTANCE BTW HOLE & EDGE OF LUG AT HORIZONTAL HOLE ℄:

$\tan\alpha = 2.45/n = 3.525/0.85$
$\Rightarrow n = 0.59''$

DISTANCE $= 1.15 + 0.59 - 1.9/2$
$= 0.79''$

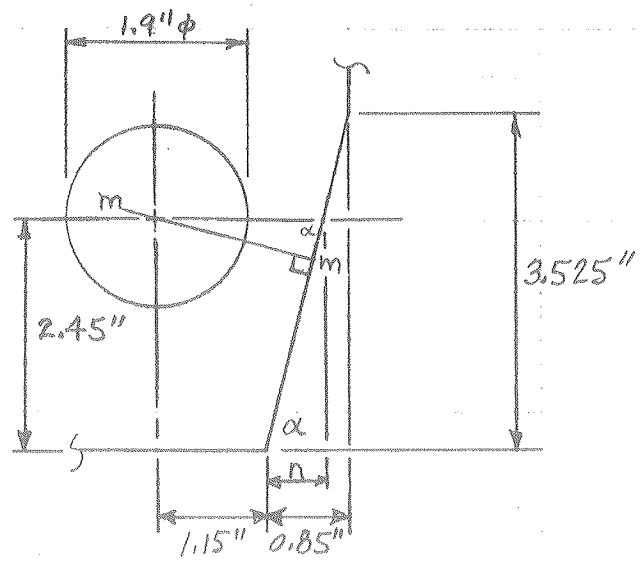

CALCULATE DISTANCE BETWEEN HOLE AND EDGE OF LUG ALONG LINE m-m:
DISTANCE BETWEEN CENTER OF HOLE AND EDGE OF LUG ALONG LINE m-m =
$\sin\alpha\,(1.15 + 0.59)'' = 1.69''$
DISTANCE $= 1.69'' - 1.9''/2 = 0.74''$
ASSUME THE HOLE IS 2"ϕ RATHER THAN 1.9"ϕ.
THEN, MINIMUM DISTANCE $= 1.69'' - 2''/2 = 0.69''$

$A = 2(0.69'' \times 1'') = 1.38\ in^2$
THICKNESS

$f_T = \dfrac{1{,}000\ Lbs}{1.38\ in^2} = 725\ psi < 12{,}000$ OK

LUG SHEAR TEAROUT...

$f_V = \dfrac{V}{A}$

$A = 1.5''(1'') = 1.5\ in^2$

$f_V = \dfrac{1{,}000\ Lbs}{1.5\ in^2} = 670\ psi < 12{,}000$ OK

LUG BEARING...

$f_p = P/A$

A = PIN DIAMETER * LUG THICKNESS

TYPICAL MINIMUM PIN DIAMETER FOR 1,000 LB SHACKLE = 5/16".
USE 1/8" PIN DIAMETER TO CALCULATE LUG BEARING STRESS.
$A = 0.125''(1'') = 0.125\ in^2$

$$f_p = \frac{1{,}000\ Lbs}{0.125\ in^2} = 8{,}000\ psi < 12{,}000\ \underline{OK}$$

11.0 LUG ATTACHMENT WELDS

CRANE LIFT LUG:

TREAT THE WELD AS A 0.3" EQUAL LEG FILLET WELD.

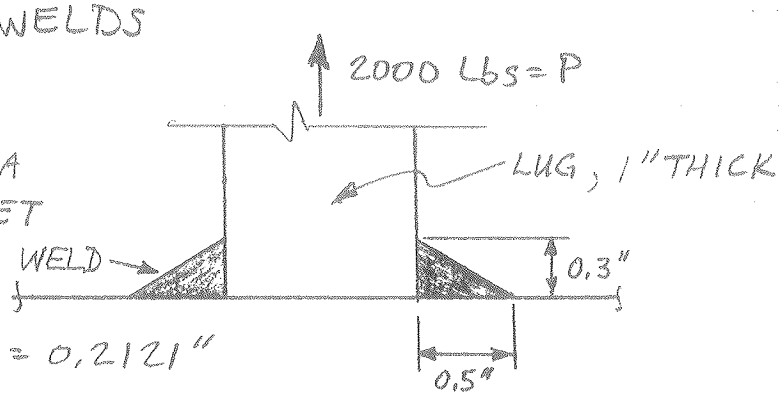

THROAT = 0.707 (0.3) = 0.2121"

EFFECTIVE THROAT LENGTH = 2(1.92" − 2(0.3")) = 2.64" (1.32" ON EACH CHANNEL FLANGE)
↑ FLANGE WIDTH ↑ TO ACCOUNT FOR NO END RETURNS

THROAT AREA FOR EACH WELD = 0.2121" (2.64") = 0.56 in^2

$$f_w = \frac{P}{A_T} = \frac{2{,}000\ Lbs}{2(0.56\ in^2)} = 1{,}786\ psi < 12{,}000\ \underline{OK}$$

CHECK AISC REQUIREMENTS:
MINIMUM SIZE = 5/16" = 0.3125" OK
MAXIMUM EFFECTIVE SIZE = 0.343", THE FLANGE AVERAGE THICKNESS, SINCE THE WELD IS BUILT OUT TO OBTAIN FULL THROAT THICKNESS FOR A 0.3 EQUAL LEG FILLET WELD. OK
MINIMUM EFFECTIVE LENGTH = 4 * 0.3" = 1.2" > 1.32" OK

567461

LOAD LUG:

TREAT THE WELD AS A 0.3" EQUAL LEG FILLET WELD.

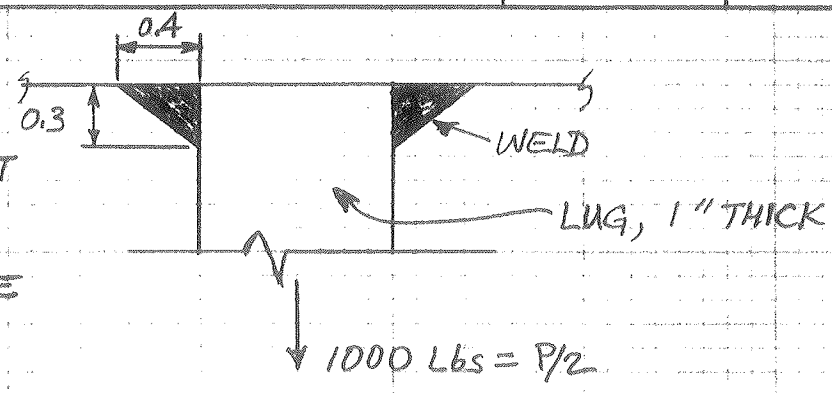

THIS WELD IS THE SAME AS THE WELD ON THE CRANE LIFT LUG.

$\therefore A_T = 0.56\ in^2$

$$f_w = \frac{P}{A_T} = \frac{1{,}000\ Lbs}{2(0.56\ in^2)} = 900\ psi < 12{,}000 \quad \underline{OK}$$

CHECK AISC REQUIREMENTS:
SAME AS CRANE LIFT LUG. OK

12.0 OTHER WELDS

- THE 1" x 1/4" x 116.125" BAR BETWEEN THE CHANNELS IS WELDED ALONG ITS TOP EDGE TO THE TOP FLANGE OF EACH CHANNEL.
- THE TWO 2 1/2" x 15" x 1/4" BARS BETWEEN THE CHANNELS AT EACH END OF THE FIXTURE ARE WELDED ALONG THE EDGE TO THE FLANGE OF EACH CHANNEL.
- THE COVER PLATE AT EACH END IS WELDED TO THE OUTSIDE SURFACE OF THE FLANGES AND TO THE WEB OF EACH CHANNEL.