8-2-94

LIFTING DEVICE

DEVICE NAME: KTeV TRD Laminating Table Lifting Frame

ENGINEERING NOTE NUMBER: 66

DRAWING NUMBER:

APPLICABLE STANDARD: ANSI/ASME B30.20-1985

RATED LOAD: 640 lb

TEST LOAD: 800 lb

TEST LOAD PERCENT: 125 %

LAST LOAD TEST DATE: 7-18-94

COLOR: Red / black

STRESS CALCULATIONS:

Done by: John Kreider

Date: 6/15/94

Reviewed by: Bob Wands

Date: 6/22/94

REMARKS:

IDENTIFICATION:

Engineering Note Number & Rated Load Must be Clearly Marked On a Conspicuous Surface.

June 22, 1994

FERMILAB

RD/MSD/Engineering Analysis Group

To: John Krider
From: Bob Wands
Subject: Review of Ktev lamination table lifting frame

I have reviewed the calculations for the lamination table lifting frame and found them thorough and complete. The largest calculated stresses are well below the Aluminum Association allowable stress for 6061-T6 of 19 ksi away from welds, and 11 ksi within one inch of welds. The limited number of cycles (approximately 100) eliminates the need to consider fatigue.

It is my opinion that the lifting frame may be safely load tested and will subsequently perform adequately in service.

Lamination table lifting frame
Subassembly A - Bottom view
1 assembly required
J. Krider 6/14/94

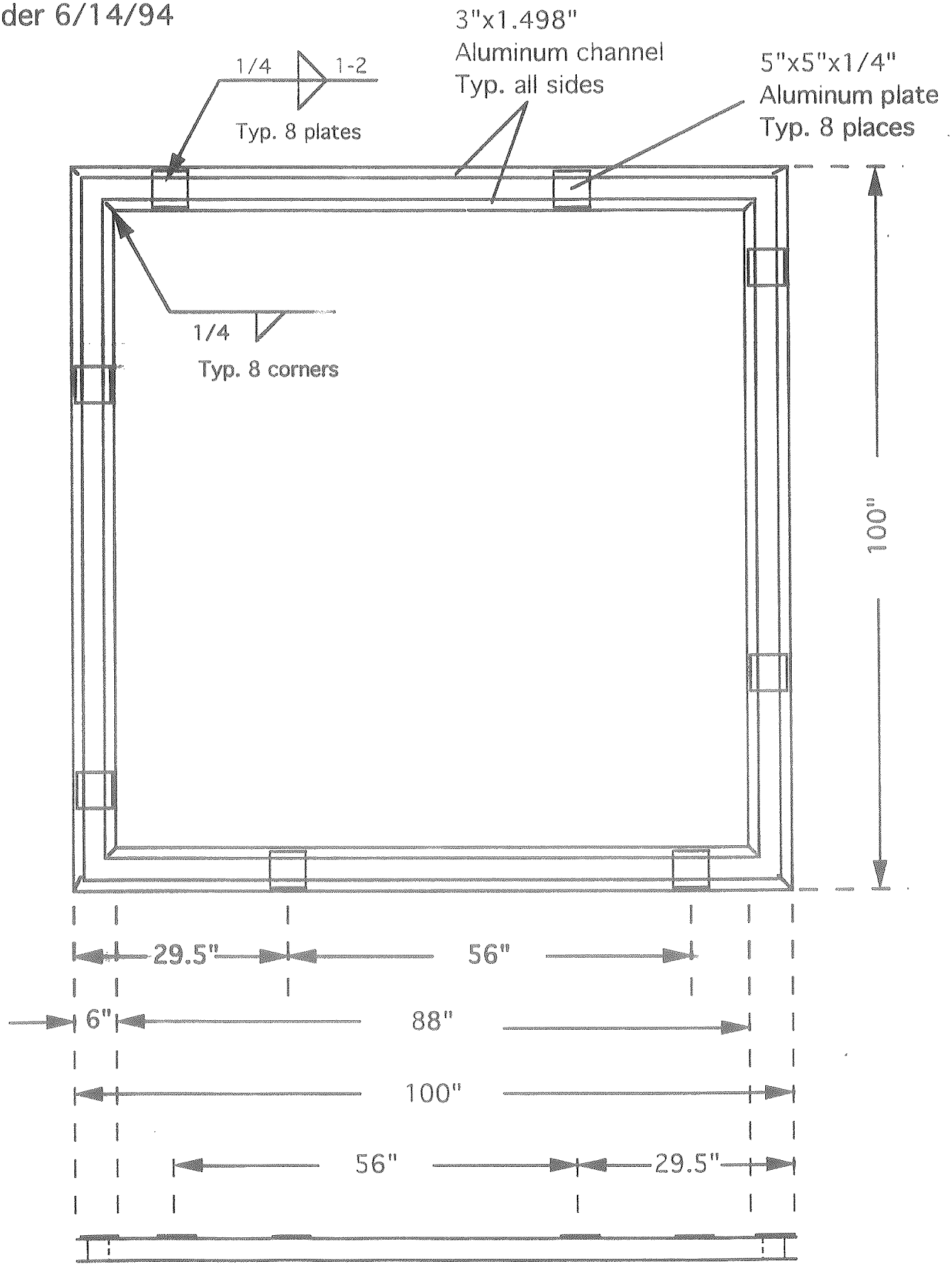

Lamination table lifting frame
Subassembly B - Bottom view
1 assembly required
J. Krider 6/14/94

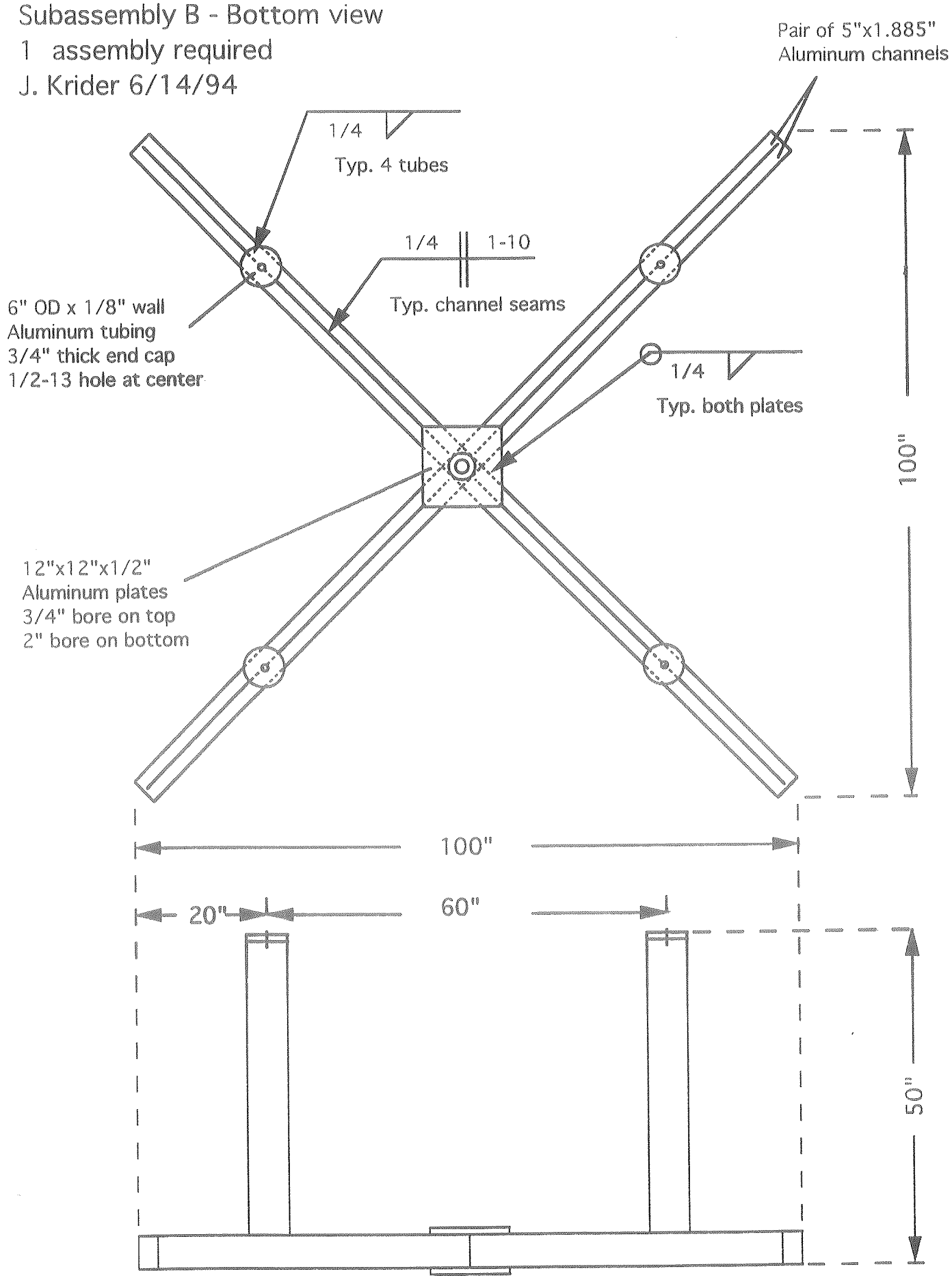

Lamination table lifting frame
Assembly of A & B units - Bottom view
1 assembly required
J. Krider 6/14/94

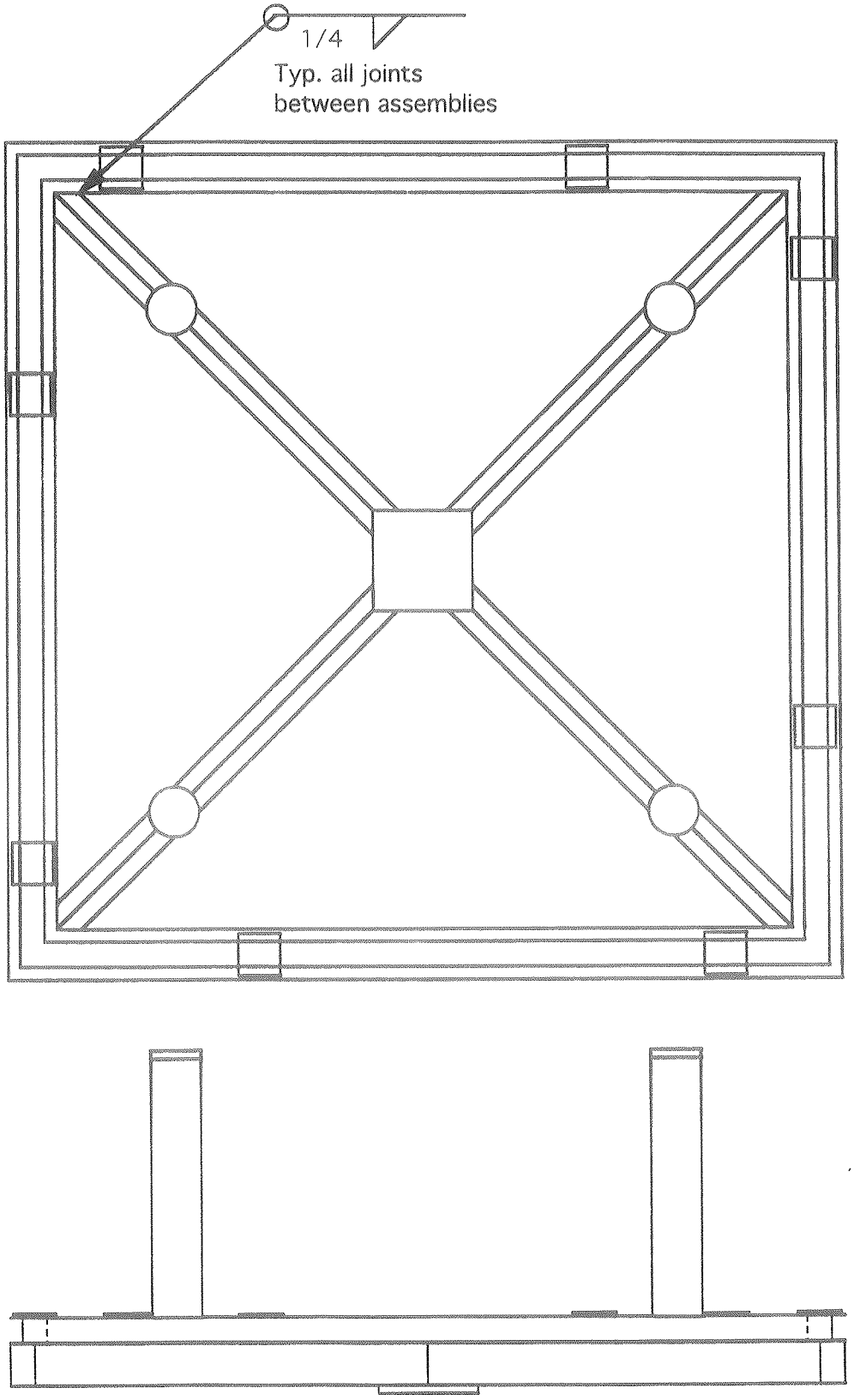

Top/side view of lamination table lifting frame with tool and jig plates attached
6/14/94

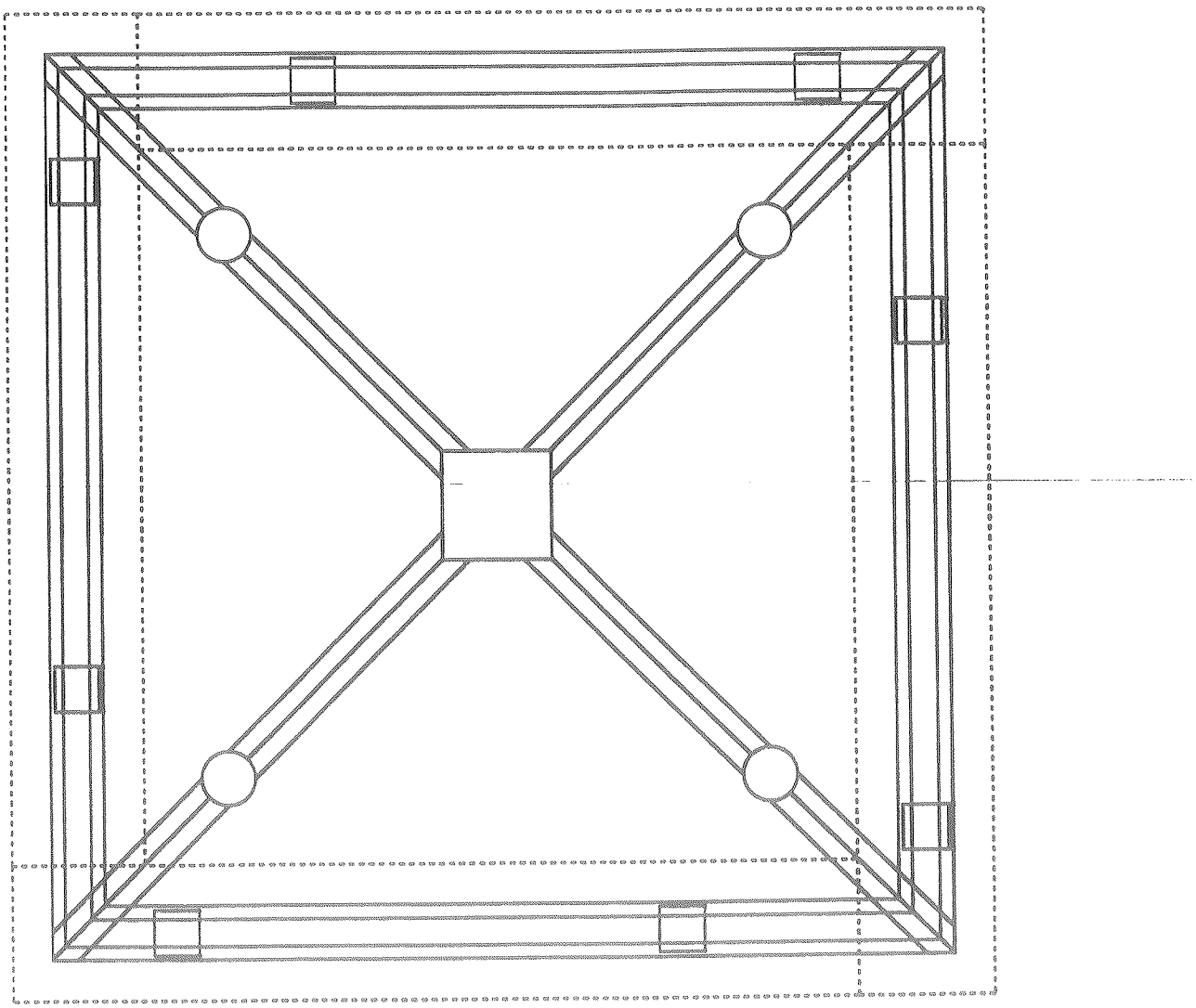

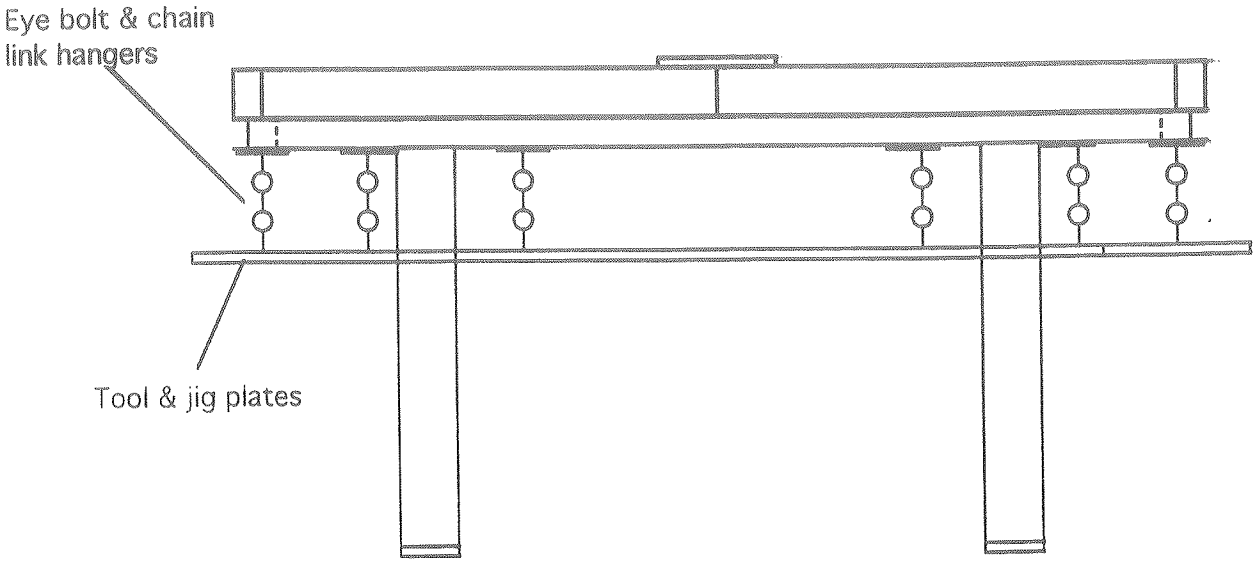

FERMILAB
ENGINEERING NOTE

SECTION	PROJECT	SERIAL-CATEGORY	PAGE
			1

SUBJECT: Lamination table lifting frame calculations

NAME: J. Krider

DATE: 6/15/94

REVISION DATE:

I. Deflection calculations, maximum stress calculations

A. 5"x5"x1/4" aluminum plates on subassembly A
- load = 75 lb at center
- assume region of 3"x3" unsupported between welds

$$y_{max} = \frac{Wl^3}{48EI} = \frac{(75\,lb)(3\,in)^3}{48(10^7\,lb/in^2)\left(\frac{(3\,in)(1/4\,in)^3}{12}\right)} = \boxed{0.001\,in}$$

$$\sigma_{max} = \frac{Wl}{4Z} = \frac{(75\,lb)(3\,in)}{4\left(\frac{(3\,in)(1/4\,in)^2}{6}\right)} = \boxed{1800\,lb/in^2}$$

B. One 100 inch long side channel (3"x1.498") on Subassembly A
- load = 75 lb (assume uniform load, although actual load is concentrated at 2 points well away from the center)

$$y_{max} \approx \frac{5Wl^3}{384EI} = \frac{5(75\,lb)(100\,in)^3}{384(10^7\,lb/in^2)(1.85\,in^4)} = \boxed{0.053\,in}$$

$$\sigma_{max} \approx \frac{Wl}{8Z} = \frac{(75\,lb)(100\,in)}{8(1.24\,in^3)} = \boxed{760\,lb/in^2}$$

C. One leg of "X" frame on Subassembly B
- load = 200 lb cantilevered 70 in from center plate

$$y_{max} = \frac{Wl^3}{3EI} = \frac{(200\,lb)(70\,in)^3}{3(10^7\,lb/in^2)(2\times 8.9\,in^4)} = \boxed{0.130\,in}$$

$$\sigma_{max} = \frac{Wl}{2Z} = \frac{(200\,lb)(70\,in)}{2(2\times 3.56\,in^3)} = \boxed{2000\,lb/in^2}$$

D. 1/2" thick central lifting plate: 4"x4" square with fixed (welded) edges, load = 800 lb on central lifting eyebolt of 3/4" diameter shank.
From Roark & Young 5th ed. p 393, case 8b - stress at center of a side

$$\sigma = \frac{-\beta_2 W}{t^2} = \frac{(.254)(800\,lb)}{(1/2\,in)^2} = \boxed{2400\,lb/in^2} \qquad y_{max} \approx \frac{\alpha q b^4}{E t^3} = \frac{(.0138)(800)(4)^4}{10^7(1/2)^3} = \boxed{0.002\,in}$$

SUBJECT: Lamination table calcs.

NAME: J. Krider

DATE: 6/15/94 | REVISION DATE:

II Eyebolt loads & ratings

a. Central eyebolt is 3/4" shank, rated at 6000 lb work load limit. Nominal load is 800 lb.

b. Eyebolts connecting to plates are 3/8" dia shank, rated at 1400 lb work load limit. Nominal load is 75 lb/bolt.

c. Connecting links, oval snap rated at 400 lb work load limit. Nominal load is 75 lb.

FERMILAB
ENGINEERING NOTE

SECTION	PROJECT	SERIAL-CATEGORY	PAGE

SUBJECT: Lamination table calcs.

NAME: John Krider

DATE: 6/15/94

REVISION DATE:

III Weld loads

A. 5"x5"x1/4" plates on Subassembly A
- each plate carries 75 lb load on eyebolt located at center
- each plate is attached to the channel frame with 6" length of 1/4" fillet weld for a total weld area of 1½ in².

$$\text{stress} = \frac{W}{A} = \frac{75\ \text{lb}}{(6\ \text{in})(1/4\ \text{in})} = \boxed{50\ \text{lb/in}^2 \text{ in tension}}$$

B. Attachment of Subassembly A to Subassembly B
- each of 4 corners has at least 8" length of 1/4" fillet and bears a tension load of 200 lb.

$$\text{Stress} = \frac{200\ \text{lb}}{(8\ \text{in})(1/4\ \text{in})} = \boxed{100\ \text{lb/in}^2 \text{ in tension}}$$

C. Each leg of "X" frame into center plates of Subassembly B
- moment load is 70 in x 200 lb = 14000 in-lb.
- height of channel is 5", so shear load at weld is:

$$\text{Shear force} = \frac{14000\ \text{in lb}}{5\ \text{in}} = 2800\ \text{lb}$$

which is distributed over ~12" of 1/4" fillet weld, so

$$\text{Stress} = \frac{2800\ \text{lb}}{(12\ \text{in})(1/4\ \text{in})} = \boxed{930\ \text{lb/in}^2} \text{ in shear}$$

D. Tensile load on top lifting plate is 800 lb spread over approximately 16" of 1/4" fillet weld

$$\text{Stress} = \frac{800\ \text{lb}}{(16\ \text{in})(1/4\ \text{in})} = \boxed{200\ \text{lb/in}^2 \text{ in tension}}$$