LIFTING DEVICE

DEVICE NAME: RING VETO LIFTING FIXTURE

ENGINEERING NOTE NUMBER: 63

DRAWING NUMBER: 3832.113-MD-267234

APPLICABLE STANDARD: ANSI/ASME B30.20

RATED LOAD: 7 TONS (14,000 LBS)

TEST LOAD:

TEST LOAD PERCENT:

LAST LOAD TEST DATE:

COLOR:

STRESS CALCULATIONS:

Done by: DAVE PUSHKA

Date: FEBRUARY 1ST TO THE 4TH 1994

Reviewed by: Z. TANG

Date: 14 FEB '94

REMARKS:

IDENTIFICATION:

Engineering Note Number & Rated Load Must be Clearly Marked On a Conspicuous Surface.

Reviewed by Z. Parry Feb 14, 1994

FERMILAB ENGINEERING NOTE	SECTION	PROJECT	SERIAL-CATEGORY	PAGE
	RD/MSD/MSG	KTeV	1.1.2	1

SUBJECT: LIFTING BRACKET FOR RING VETOS:

NAME: DAVE PUSHKA

DATE: 1 FEB '94

REVISION DATE:

GIVEN:

	VV6, VV7	VV8, 9, & 10
WEIGHT	4.6 TONS	6.0 TONS
	9.2 KIPS	12 KIPS
O.D.	$91\frac{1}{4}$"	$107\frac{3}{4}$"
L	50.3"	59.5"
γ	$33\frac{1}{2}°$	$33\frac{1}{2}°$

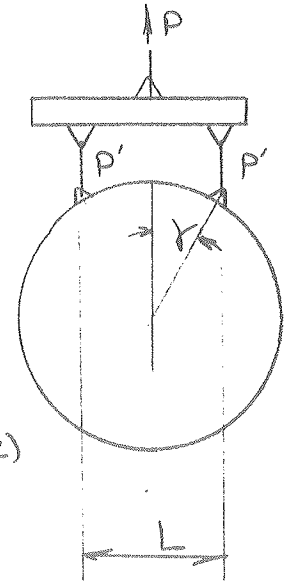

ANSI/ASME B30.20 REQUIRES: (CHAPTER/SP 20.-1.2.2)

$$\sigma_{ALLOWABLE} = \frac{\sigma_{YIELD}}{3}$$

ASSUME NORMAL CARBON STEEL IS USED FOR ALL PARTS AND $\sigma_Y = 30$ KSI (A36 HAS $\sigma_y = 36$ KSI)

THEREFORE $\sigma_{ALLOW} = \frac{30\text{ KSI}}{3} = 10$ KSI

DESIGN 1 BRACKET/LIFTING FIXTURE FOR BOTH RING VETOS, BASE ON L = 50" ∴ SPREADER IS IN SLIGHT TENSILE LOAD W/ 8, 9, & 10

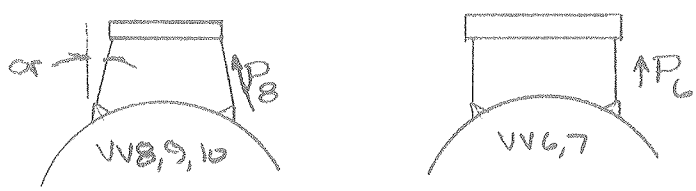

DESIGN BEAM CONNECTIONS TO PREVENT BRACKET FROM SLIDING ON CLIP. USE TWO THIN PLATES AS REQUIRED. (SEE PAGES 3 & 4)

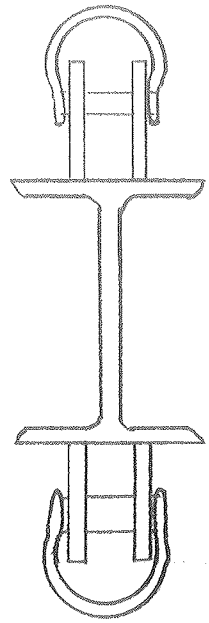

582540

SUBJECT: LIFTING BRACKET FOR RING VETOS:

NAME: DANE PUSHKA

DATE: 2 FEB '94 | REVISION DATE:

BEAM DESIGN:

CONSIDER SIMPLE SUPPORTED:

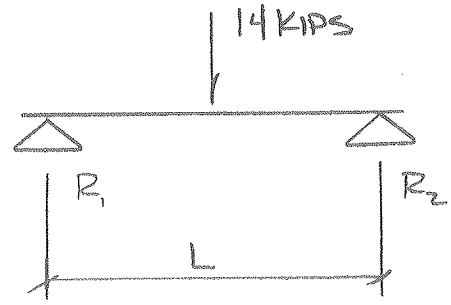

$$R_1 = R_2 = \frac{14}{2} = 7 \text{ KIPS}$$

$$M_{MAX} = \frac{Pl}{4} = \frac{(14 \text{ KIPS})(60 \text{ INCHES})}{4} = 210 \text{ KIP-IN}$$

$$M_{MAX} = (210 \text{ KIP-IN})(1 \text{ FT}/12 \text{ IN}) = 17.5 \text{ KIP-FT.}$$

$$\sigma = \frac{My}{I} \qquad \text{ASSUME } \sigma = \frac{\sigma_y}{3} = 10 \text{ KSI} \ \& \ y = 4'' \ (8'' \text{ DEEP SECTION})$$

$$I_{REQ'D} = \frac{My}{\sigma} = \frac{(210)(4)}{10 \text{ KSI}} = 84.0 \text{ IN}^4$$

$\therefore$ W8x28 IS SATISFACTORY, $I = 98 \text{ IN}^4$, $b_f = 6.535$

CHECK UNBRACED LENGTH:

$$L_{EFF} < \frac{76 b_f}{\sqrt{F_y}} \quad \& \quad L_{EFF} < \frac{20{,}000}{(d/A_F) F_y}$$

$$L = \frac{(76)(6.535)}{\sqrt{30 \text{ KSI}}} = 90.6 \text{ IN} > 60 \text{ IN} \ \therefore \text{ OK}$$

$$L = \frac{20{,}000}{(2.65)\,30} = 251 > 60 \text{ IN} \ \therefore \text{ OK}$$

CHECK σ_{SHEAR}: $\sigma_S = \frac{P/2}{A} = \frac{14/2}{8.25} = 0.85 \text{ KSI} < 10 \text{ KSI} \ \therefore$ OK

RESULT: USE A W8x28 FOR THE SPREADER.
(A36 CARBON STEEL MATERIAL)

SUBJECT: LIFTING BRACKET FOR RING JETOS:

NAME: DANE PUSHKA

DATE: 3 FEB '94 | REVISION DATE:

CHECK TENSION IN SPREADER –

ASSUME 1'-0 LONG MEMBERS FROM SPREADER TO THE RC (THIS IS THE WORST CASE, LONGER MEMBERS REDUCE TENSION)

$$\alpha = \text{ARCSIN}\left(\frac{59.5-50}{12}\right) = 52^\circ$$

$$\therefore P_8 = \frac{P'}{\cos 52} = \frac{14\text{ KIPS}}{\cos 52} = 23\text{ KIPS}$$

HORIZONTAL FORCE $= 23 \sin 52 = 18$ KIPS $= T$

$A_{W6X25} = 8.25\text{ IN}^2 \therefore \sigma = \frac{T}{A} = \frac{18}{} = 2.2$ KSI $\ll 10$ KSI $\therefore$ OK

SINCE THIS TENSION WOULD REDUCE THE NET COMPRESSIVE STRESS ON THE WF, THE W6x25 IS STILL OK.

$\sigma_{TENSILE} = 2.2 + \frac{My}{I} = \frac{(210)(4)}{98} = 10.75$ KSI > 10 KSI $\therefore$ DESIGN FOR TWO SETS OF CLIPS!

DESIGN CLIPS –

DESIGN ALL THREE CLIPS FOR A 14 KIP LOAD (ASSUME A SLING ON ONE CLIP BREAKS, – THE SPREADER WILL NOT FAIL) USING 1½" SHACKLES (1⅝"ø PIN, 7" INSIDE LENGTH, 2⅜" GAGE)

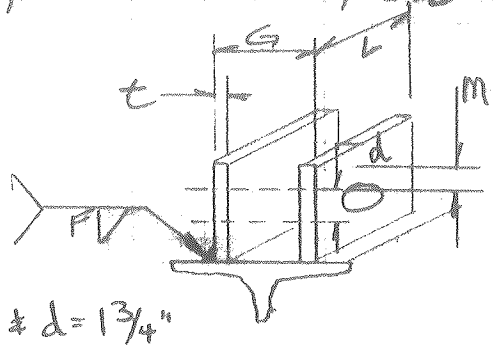

CHECK TENSILE AREA:

$$A_{REQ} = \frac{P}{\sigma_A} = \frac{14\text{ KIPS}}{10\text{ KSI}} = 1.4\text{ IN}^2$$

$1.4\text{ IN}^2 = (2)(t)(L-d)$, TRY $t = \frac{1}{2}$" & $d = 1\frac{3}{4}$"

$$L = \frac{(1.4)}{(2)(\frac{1}{2})} + 1\tfrac{3}{4} = 3.15\text{ IN} \rightarrow \text{USE } L = 4"$$

CHECK SHEAR AREA:

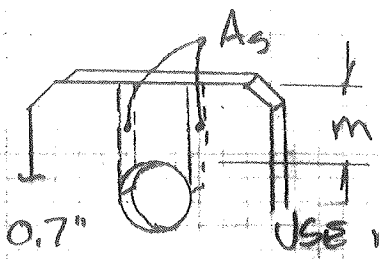

$A_{S\,REQ} = \frac{P}{\sigma_A} = 1.4\text{ IN}^2$ (ASSUME $\sigma_A = \tau_A$)

$A = (2\text{ PLATES})(2\ \frac{\text{SIDES}}{\text{PLATE}})(t)(m) \Rightarrow m = \frac{A}{4t} = \frac{1.4}{4(\frac{1}{2})} = 0.7"$ USE $m = 1"$

562540

FERMILAB ENGINEERING NOTE	SECTION	PROJECT	SERIAL-CATEGORY	PAGE
	RD/MSD/MSS	KTEV	1.1.2	4

SUBJECT: LIFTING BRACKET FOR RING VETOS:

NAME: DAVE PUSHKA

DATE: 4 FEB '94

REVISION DATE:

CHECK WELD AREA:

$\sigma_{ALLOW} = 9600$ #/IN-IN L = 4", P = 14 KIPS, F = ?

$$A = \frac{P}{\sigma_{ALLOW}} = 2(L)(F) \therefore F = \frac{P}{2(\sigma_{ALL})L} = \frac{14{,}000}{2(9600)(4)} = 0.18''$$

THEREFORE, USE 1/4" FILLET WELDS W/ E-7018 ROD.

CLIP SUMMARY –
(NOT TO SCALE)

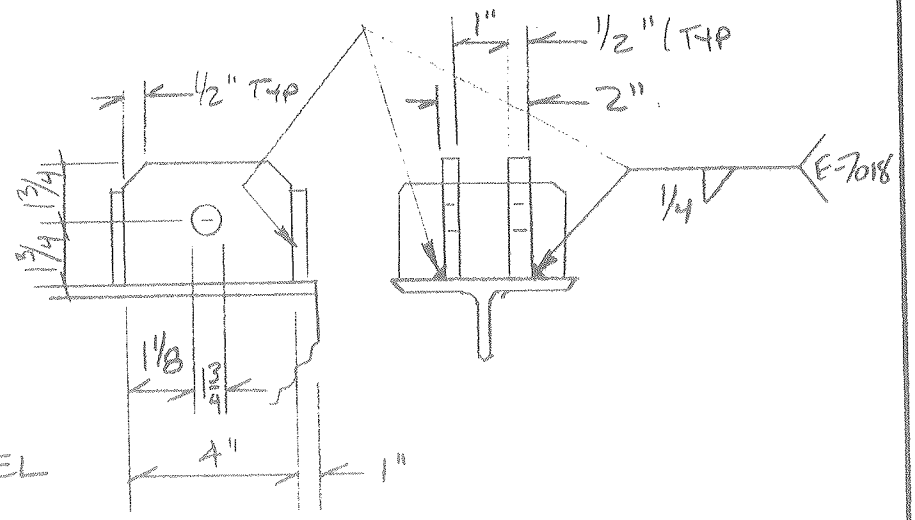

MATERIAL –
A36 CARBON STEEL

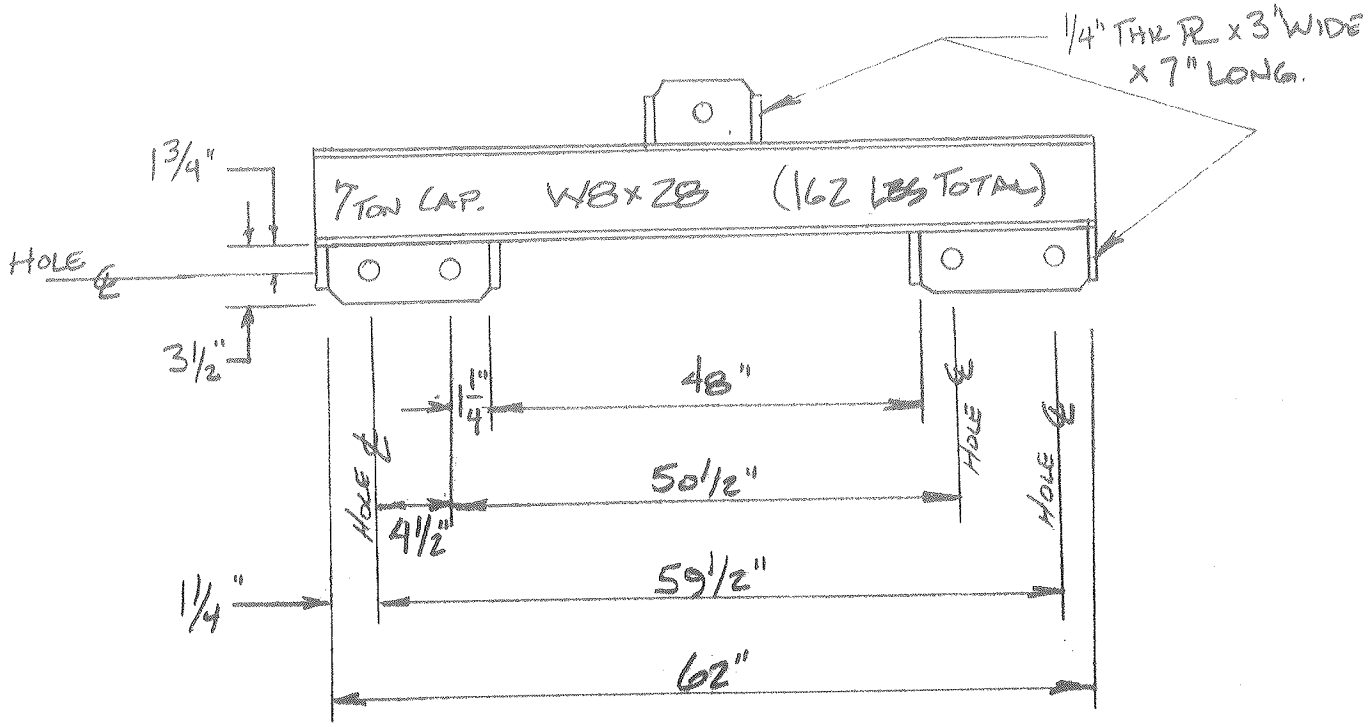

562540