LIFTING DEVICE

DEVICE NAME: HARP TUBE CALORIMETER

ENGINEERING NOTE NUMBER: 60

DRAWING NUMBER: 9210.300-ME-285910

APPLICABLE STANDARD: ANSI/ASME B30.20-1985

AISC

RATED LOAD: 8,000#

TEST LOAD: 10,150#

TEST LOAD PERCENT: 125

LAST LOAD TEST DATE: 5/11/93

COLOR: BLUE

STRESS CALCULATIONS:

Done by: [illegible]

Date: 4/7/93

Reviewed by: ZHIJING TANG (SEE XEROX COPY OF CALCS FOR SIGNATURE)

Date: 4/12/93

REMARKS:

IDENTIFICATION:

Engineering Note Number & Rated Load Must be Clearly Marked On a Conspicuous Surface.

DESIGN A LIFTING FIXTURE FOR THE FOLLOWING MODULES:

SINGLE MODULE:

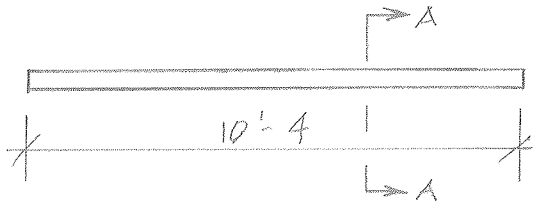

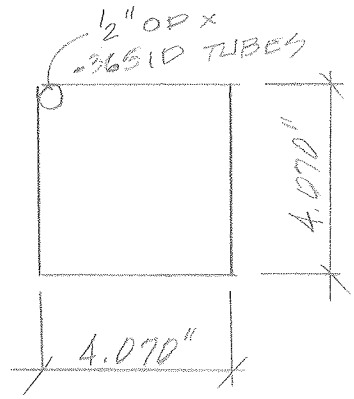

SECTION A-A

WT = 500#/MODULE

MODULE STACK:

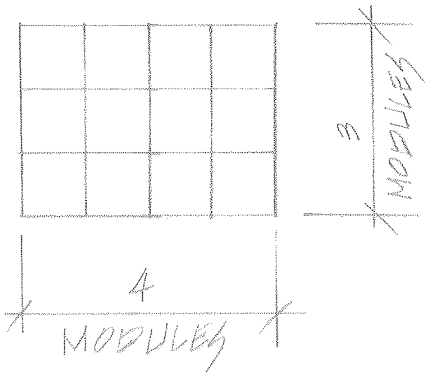

$$I_{TUBE} = \frac{\pi((0.5)^4 - (0.365)^4)}{64} = 0.0022 \text{ IN}^4$$

$$r_{TUBE} = \frac{\sqrt{0.5^2 + 0.365^2}}{4} = 0.1548$$

$$\text{TOTAL WT} = 500 \times 12 = 6000\#$$

$$A_{TUBE} = \frac{\pi((.5)^2 - (.365)^2)}{4} = 0.0917 \text{ IN}^2$$

$$S_{TUBE} = \frac{\pi((0.5)^4 - (0.365)^4)}{32(0.5)} = 0.0088 \text{ IN}^3$$

DESIGN:

ACCORDING TO ANSI/ASME B30.20, SECTION 20-1.2.2:

MINIMUM DESIGN FACTOR = 3.0

$\therefore$ LOAD = 3.0(6000) = <u>18,000#</u>

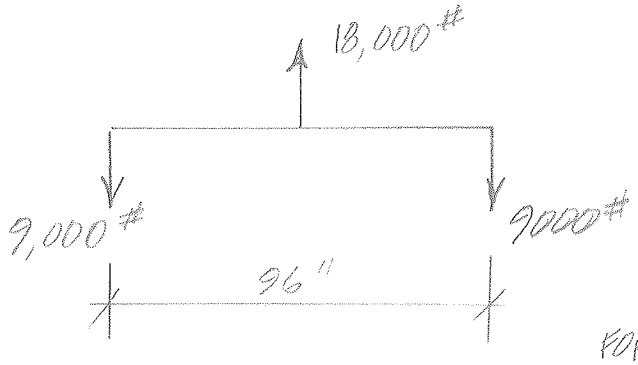

FOR STEEL:
SHEAR AREA REQ'D:

$F_v = 0.40\,F_y$
$= 0.40(36)$
$= 14.4$ KSI

ASSUME FULL LOAD TAKEN BY ONE SUPPORT FOR SHEAR:

$A_{REQ'D} = 9000(2)/14400$
$= \underline{1.25\ IN^2}$

$M = Pl/4$
$= 18{,}000(96)/4$
$= 432{,}000$ #-IN

FOR $Kl/r < 200$ (AISC 1.8.4)

FOR TOTAL DETECTOR:

$I_x = 0.0022(8\times8)(12)$
$= \underline{1.69\ IN^4}$

$S_x = 0.0088(8\times8)(12)$
$= \underline{6.758\ IN^3}$

STRESS ON EA. TUBE $= 432000/6.758$
$= 63{,}924$ PSI <u>N.G.</u>

∴ <u>SPREADER BAR REQ'D.</u>

CHECK MODULE FOR ACTUAL LOAD:

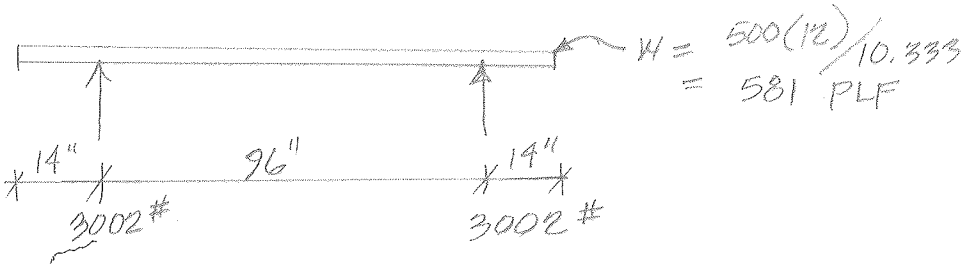

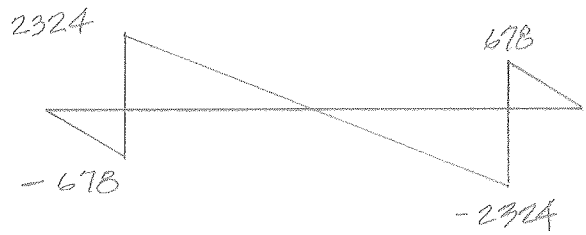

$M_{NEG} = \frac{1}{2}(14)(678)$
$= 4746$ #-IN

$M_{POS} = \frac{1}{2}(2324)(96/2)$
$= 55\,776$ #-IN

$f_b = 4746/6.758$
$= 702$ psi

$f_b = 55776/6.758$
$= 8253$ psi

MAX $KL/r = 200$
$L_{MAX} = 200(.1548)$
$= 30.96''$

MODULES MUST BE BANDED @ 30" INTERVALS

APPROX. DEFLECTION:

@ 2/3 $\Delta = \frac{.048(55.4)}{24(29{,}000)(1.69)}\left((96)^3 - 2(96)(55.4)^2 + (55.4)^3\right) - .03208\frac{.048(14)^2(96)^2}{29{,}000(1.69)}$

$= 1.052 - 0.057$
$= 0.995'' > L/180 = 0.53''$ N.G.

TRY 3 MODULE SUPPORTS

$\Delta_{APPROX} = \frac{5(0.048)(48)^4}{384(29000)(1.69)} = 0.07'' < 0.53''$ ok

FROM COMPUTER OUTPUT

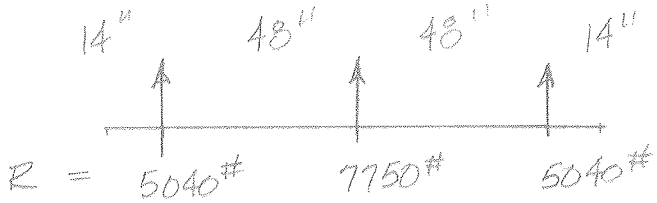

LIFTING FIXTURE DESIGN:

SHEAR:

$A_{REQ'D} = 7750/14400$
$= 0.54 \text{ IN}^2$

MOMENT:

$M = 5040(48)$
$= 241920 \text{ \#-IN}$

ASSUME $F_b = 21.6$ KSI FOR TRIAL SECTION

$S_x = 241920/21{,}600$
$= 11.2 \text{ IN}^3$

REDESIGN FOR 16 MODULES:

TOTAL WEIGHT = 500 × 16
= 8000#

DESIGN LOAD = 3 × 8000#
= 24,000# FOR LIFTING FIXTURE

A) DETECTOR CHECK

$I_{TOT} = 16(8 \times 8)(0.0022)$
$= 2.25 \text{ IN}^4$

$S_{TOT} = 16(8 \times 8)(0.0088)$
$= 9.01 \text{ IN}^3$

$A_{TOT} = 16(8 \times 8)(0.0917)$
$= 93.9 \text{ IN}^2$

$W = 8000/10.333$
$= 774.2 \text{ \#/FT}$
$= 64.52 \text{ \#/IN}$

$f_v = 3470/93.9$
$= 37 \text{ psi} < 14{,}400 \text{ psi}$ ok

$M_{MAX} = 15{,}420 \text{ \#-IN}$

$f_b = 15420/9.01$
$= 1711 \text{ psi} < 0.6(36) = 21.6 \text{ KSI}$ ok

B) LIFTING FIXTURE:

SHEAR:

$A_{REQ'D} = 3(3740)/14{,}400$
$= 0.78''$

MOMENT:

$M_{MAX} = (3(2260))(48)$
$= 483{,}840\ \#\text{-IN}$

FOR $f_b = 0.6(36) = 21.6$ KSI:

$S_{X\,REQ'D} = 483{,}840/21600$
$= 22.4\ IN^3$

FOR STEEL CHANNELS:

MIN. SIZE = 2 - C 9 x 15

$I_x = 2(51.0)$
$= 102\ IN^4$

$\Delta = PL^3/3EI = 3(2260)(48)^3/3(29{,}000)(102)$
$= 0.08''$

$L/180 = 48/180 = 0.27'' > 0.08''$ ok

ALLOWABLE BENDING STRESS:

$F_b = \dfrac{12 \times 10^3 C_b}{Ld/A_f} = 12 \times 10^3(1.0)/48(8.76)$ (AISC 1.5.1.4.5)
$= 28.5$ KSI > 21.6 KSI → USE 21.6 KSI ok

BOTTOM TUBE:

LOAD ON BOTTOM TUBE = 3(3740#)
= 11220#

SPAN = 16"

$M = 11220(16)/4$
$= 44880\ \#\text{-IN}$

$S_{REQ'D} = 44880/30{,}360$
$= 1.48\ IN^3$

FOR STEEL TUBE, $F_y = 46$ KSI

$F_b = 0.66(46)$
$= 30{,}360$ PSI

3 x 3 x 1/4 TUBE $S_x = 2.10$ OK

WELD REQUIRED BETWEEN TUBE AND CHANNELS:

P = 11220#

FOR 1/16" WELD & E70XX ELECTRODES:

F_V = 0.928 K'/IN = 928#/IN

FOR 3/16" WELD:

3(928) = 2784#/IN

11220/2784 = 4.03 INCHES OF 3/16" WELD

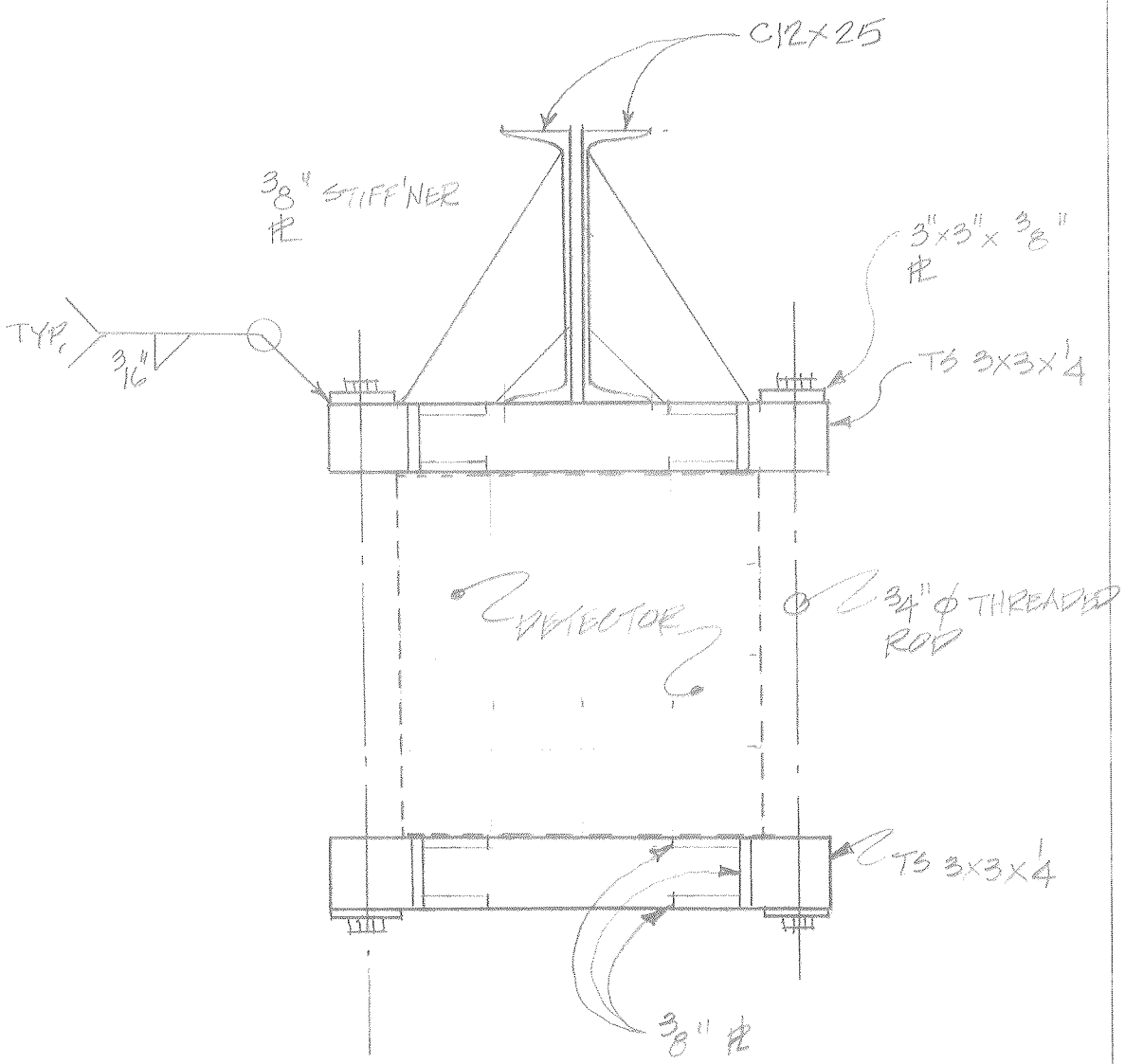

SECTION A-A

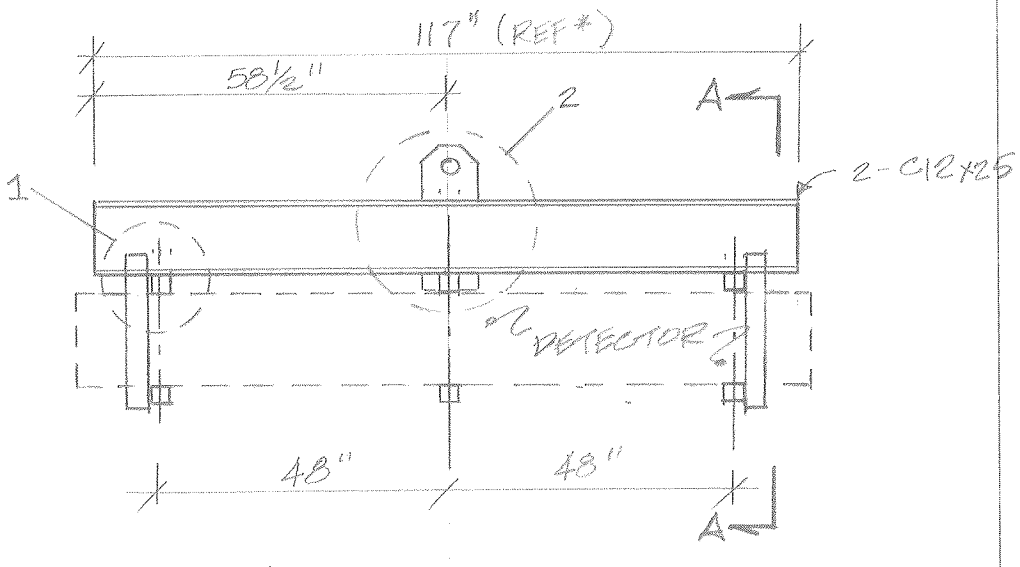

*EXISTING CHANNEL LENGTH

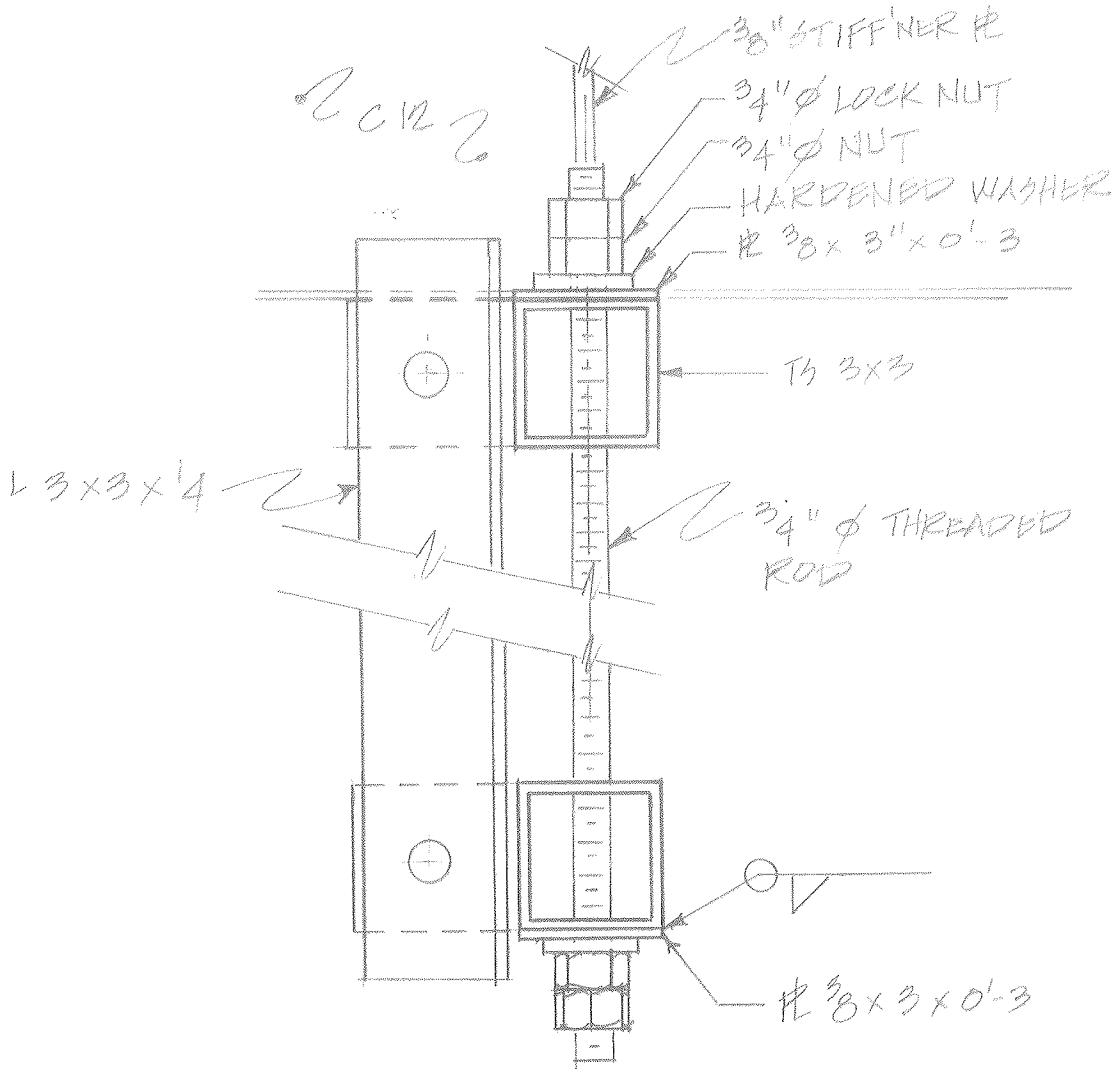

DETAIL 1

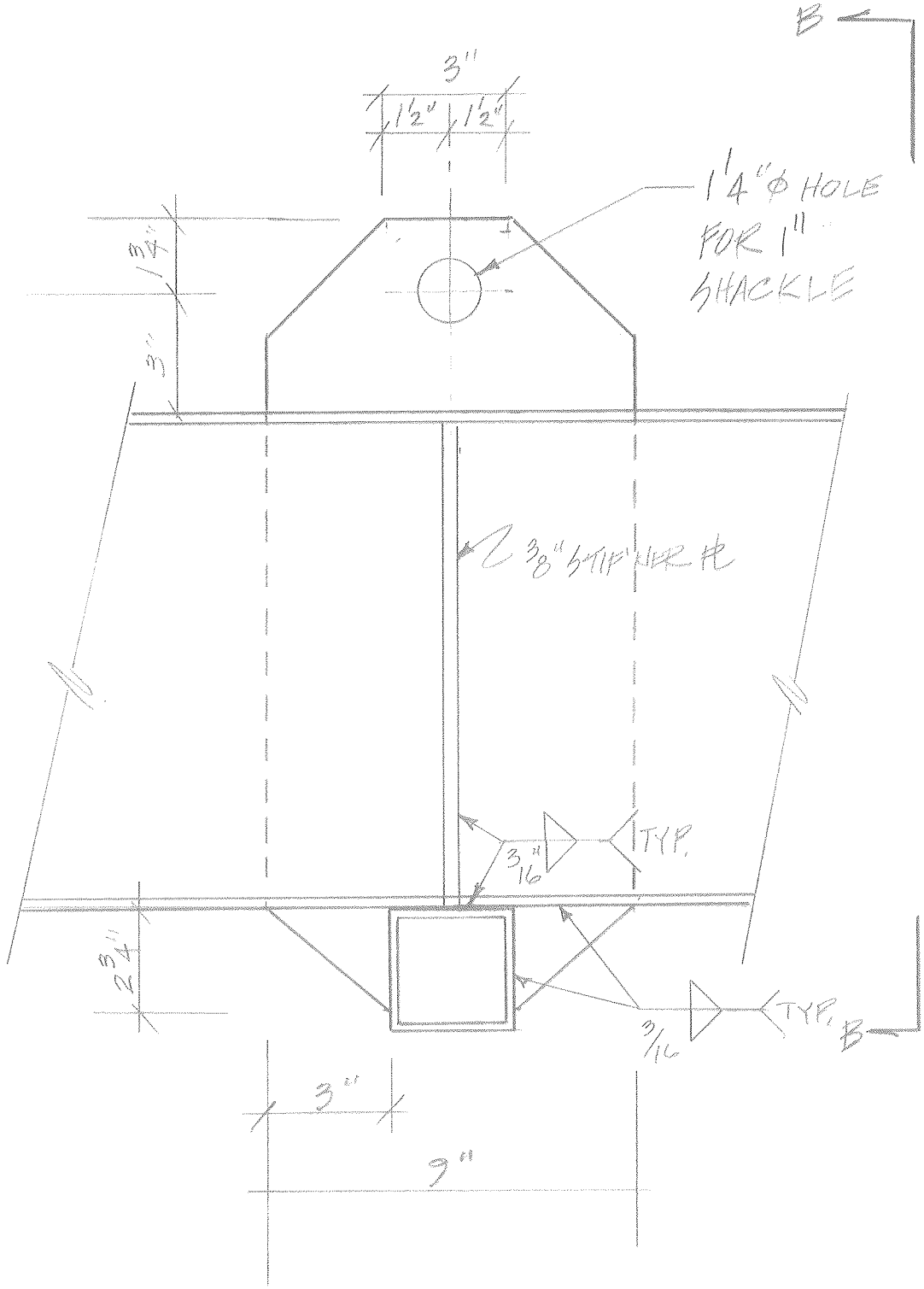
B
3"
1½"
1½"
1¼"Φ HOLE FOR 1" SHACKLE
1¾"
3"
⅜" STIFFNER PL
3/16"
TYP.
2¾"
3/16
TYP.
B
3"
9"

DETAIL 2

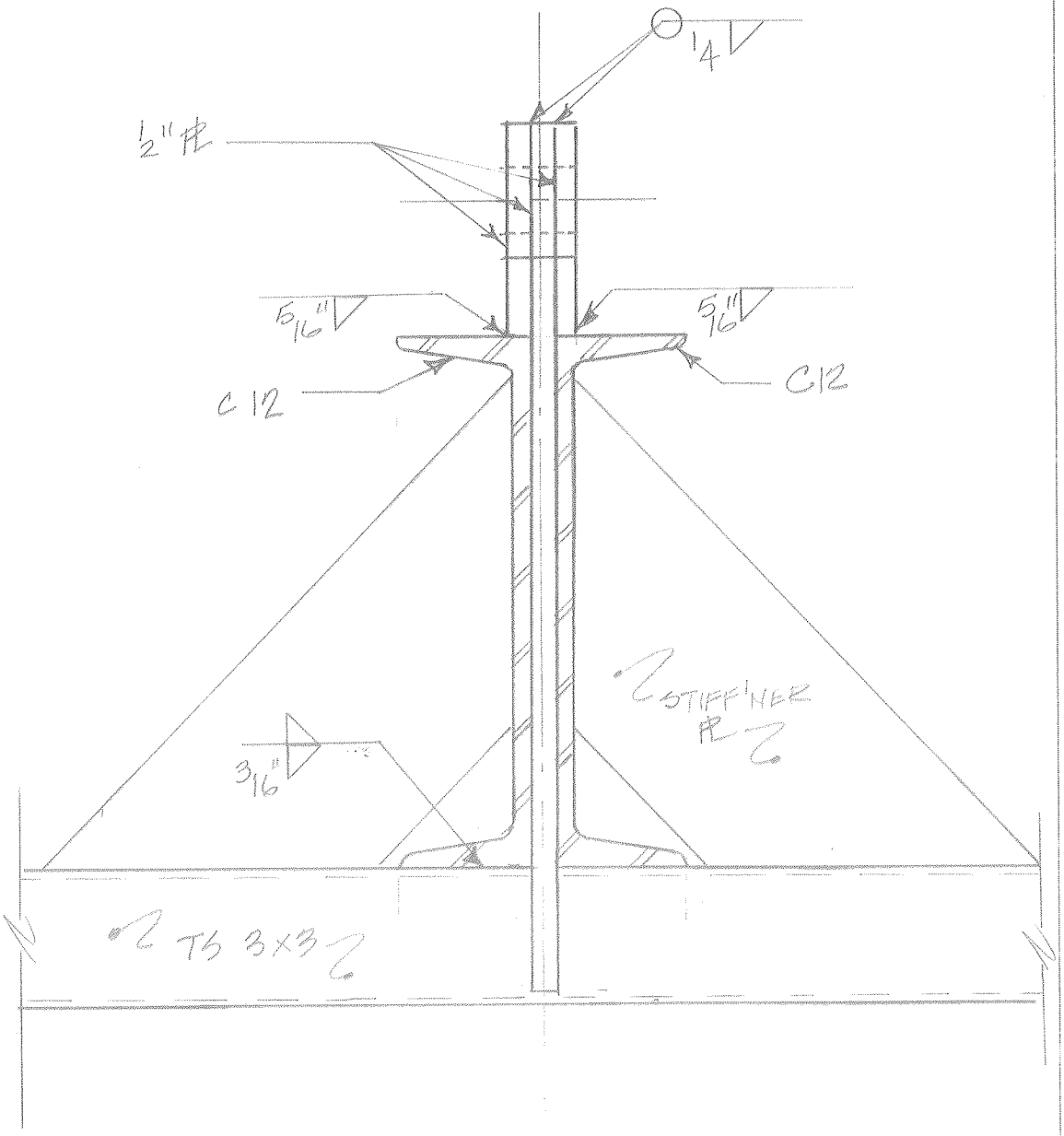

SECTION B-B

CHECK LIFTING PLATE:

$P = 8000(3) = 24{,}000^{\#}$

BEARING:

$F_p = 0.90 F_y$ (AISC 1.5.1.5.1)
$= 0.90(36)$
$= 32.4$ KSI

BEARING AREA $= 0.75(\pi(1.375))/2$
$= 1.62 \text{ IN}^2$

$f_p = 24{,}000/1.62$
$= 14{,}815$ PSI $< 32{,}400$ PSI ok

TEAR-OUT:

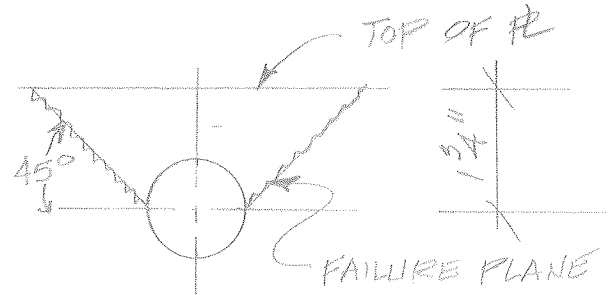

SHEAR AREA $= 2(1.75/.707)(.75)$
$= 3.71 \text{ IN}^2$

$F_v = 0.40 F_y$ (AISC 1.5.1.2.1)
$= 0.40(36)$
$= 14.4$ KSI

$f_v = 24{,}000/3.71$
$= 6500$ PSI $< 14{,}400$ PSI ok

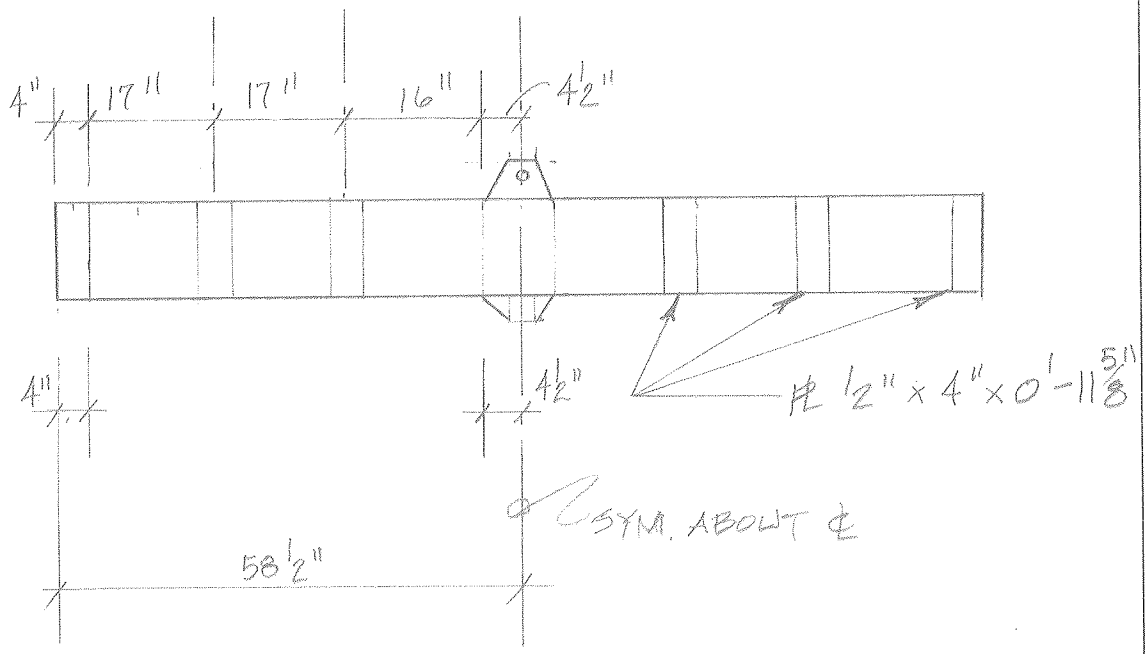
4"
17"
17"
16"
4½"
4"
4½"
PL ½" x 4" x 0'-11⅝"
SYM. ABOUT ℄
58½"

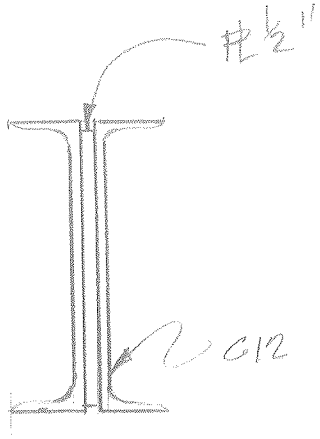
PL ½"
C12

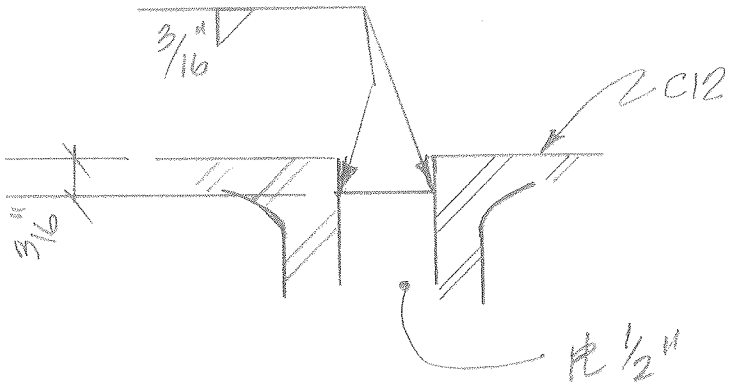
3/16"
C12
3/16"
PL ½"

12 MODULES
(LIFTING FIXTURE)

Module B-3: Multi-Span Beams Under Transverse Loading

```
        * S P A N  1 *
L1 = 14
E1 = 29.e6          I1 = 1.69
w1 = 144
        * S P A N  2 *
L2 = 96
E2 = 29.e6          I2 = 1.69
w2 = 144
        * S P A N  3 *
L3 = 14
E3 = 29.e6          I3 = 1.69
w3 = 144
```

Reactions:
R1= 0.00E+00 R2= 8.92E+03 R3= 8.92E+03
R4= 0.00E+00

Deflection:

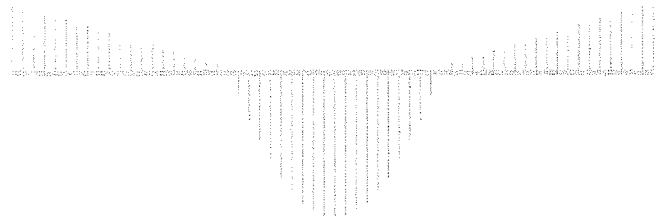

Ymax =-2.917679E+00 Span 2

ENTER F6 FOR MOMENT DIAGRAM OR
F7 FOR LOADING/BOUNDARY CONDITION MENU
F2PRINT F3DISP F6NEXT F7MENU F8REDO F9SAVE F10TOP

12 MODULES
(LIFTING FIXTURE)

Module B-3: Multi-Span Beams Under Transverse Loading

```
          * S P A N  1 *
L1 = 14
E1 = 29.e6          I1 = 1.69
w1 = 144
          * S P A N  2 *
L2 = 48
E2 = 29.e6          I2 = 1.69
w2 = 144
          * S P A N  3 *
L3 = 48
E3 = 29.e6          I3 = 1.69
w3 = 144
          * S P A N  4 *
L4 = 14
E4 = 29.e6          I4 = 1.69
w4 = 144
```

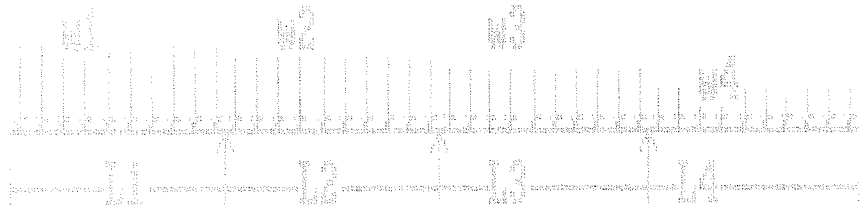

Reactions:
R1= 0.00E+00 R2= 5.04E+03 R3= 7.75E+03
R4= 5.04E+03 R5= 0.00E+00

Deflection:

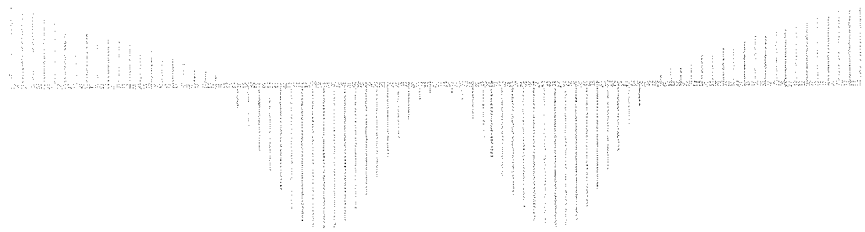

Ymax =-6.146444E-02 Span 2

ENTER F6 FOR MOMENT DIAGRAM OR
F7 FOR LOADING/BOUNDARY CONDITION MENU

F2PRINT F3DISP F6NEXT F7MENU F8REDO F9SAVE F10TOP

16 MODULES

Module B-3: Multi-Span Beams Under Transverse Loading (DETECTOR CHECK)

```
        * S P A N  1 *
L1 = 14
E1 = 29.e6          I1 = 2.25
w1 = 64.52
        * S P A N  2 *
L2 = 48
E2 = 29.e6          I2 = 2.25
w2 = 64.52
        * S P A N  3 *
L3 = 48
E3 = 29.e6          I3 = 2.25
w3 = 64.52
        * S P A N  4 *
L4 = 14
E4 = 29.e6          I4 = 2.25
w4 = 64.52
```

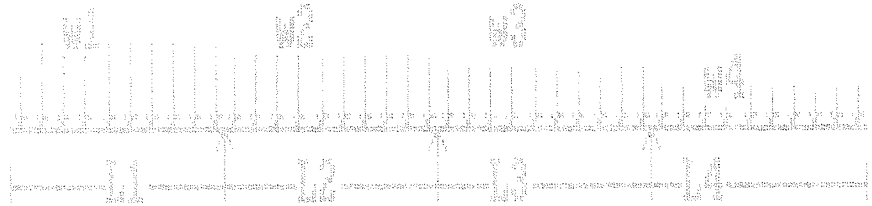

Reactions:
R1= 0.00E+00 R2= 2.26E+03 R3= 3.47E+03
R4= 2.26E+03 R5= 0.00E+00

Bending Moment:

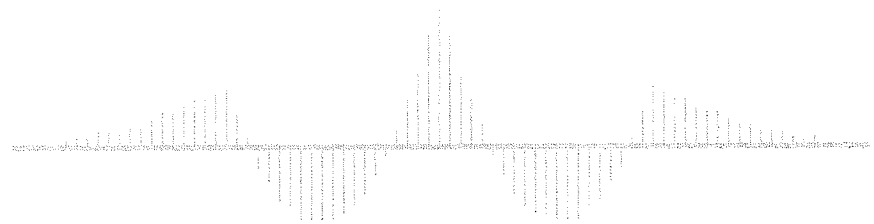

Mmax =-1.542028E+04 Span 3

ENTER F5 FOR DEFLECTION DIAGRAM, F6 FOR SHEAR DIAGRAM, OR
F7 FOR LOADING/BOUNDARY CONDITION MENU
F2PRINT F3DISP F5PREV F6NEXT F7MENU F8REDO F9SAVE F10TOP

TO MODULES
(DETECTOR CHECK)

Module B-3: Multi-Span Beams Under Transverse Loading

```
        * S P A N  1 *
L1 = 14
E1 = 29.e6          I1 = 2.25
w1 = 64.52
        * S P A N  2 *
L2 = 48
E2 = 29.e6          I2 = 2.25
w2 = 64.52
        * S P A N  3 *
L3 = 48
E3 = 29.e6          I3 = 2.25
w3 = 64.52
        * S P A N  4 *
L4 = 14
E4 = 29.e6          I4 = 2.25
w4 = 64.52
```

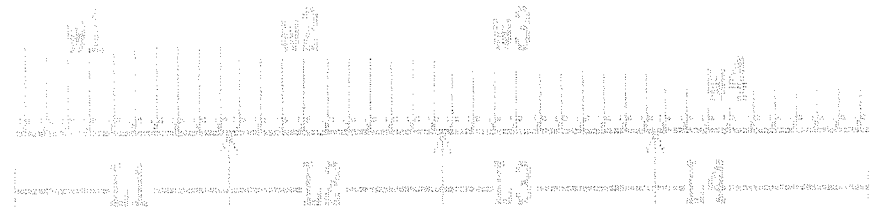

Reactions:
R1= 0.00E+00 R2= 2.26E+03 R3= 3.47E+03
R4= 2.26E+03 R5= 0.00E+00

Deflection:

Ymax =-2.068521E-02 Span 2

ENTER F6 FOR MOMENT DIAGRAM OR
F7 FOR LOADING/BOUNDARY CONDITION MENU
F2PRINT F3DISP F6NEXT F7MENU F8REDO F9SAVE F10TOP

DESIGN A LIFTING FIXTURE FOR THE FOLLOWING MODULES:

SINGLE MODULE:

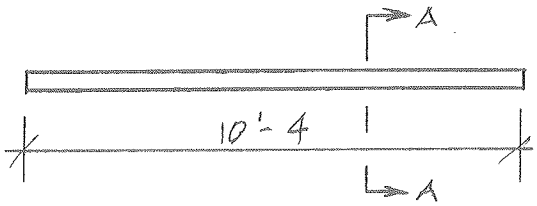

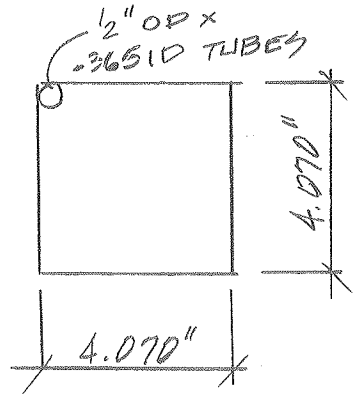

SECTION A-A

WT = 500#/MODULE

MODULE STACK:

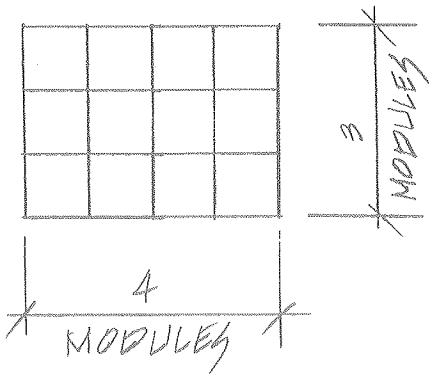

$$I_{TUBE} = \frac{\pi((0.5)^4 - (0.365)^4)}{64} = 0.0022 \text{ IN}^4$$

$$r_{TUBE} = \frac{\sqrt{0.5^2 + 0.365^2}}{4} = 0.1548$$

$$\text{TOTAL WT} = 500 \times 12 = 6000\#$$

$$A_{TUBE} = \frac{\pi((.5)^2 - (.365)^2)}{4} = 0.0917 \text{ IN}^2$$

$$S_{TUBE} = \frac{\pi((0.5)^4 - (0.365)^4)}{32(0.5)} = 0.0088 \text{ IN}^3$$

DESIGN:

ACCORDING TO ANSI/ASME B30.20, SECTION 20-1.2.2:

MINIMUM DESIGN FACTOR = 3.0

$\therefore$ LOAD = 3.0(6000) = <u>18,000#</u>

Reviewed By Zhijing Tang

April 12, 1993.

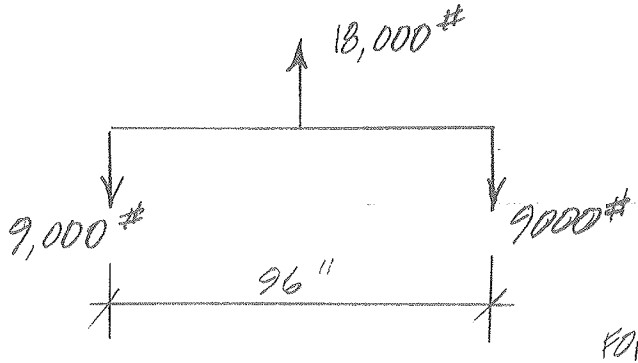

FOR STEEL:
SHEAR AREA REQ'D:

$F_v = 0.40\ F_y$
$= 0.40(36)$
$= 14.4$ KSI

ASSUME FULL LOAD TAKEN BY ONE SUPPORT FOR SHEAR:

$A_{REQ'D} = 9000(2)/14400$
$= \underline{1.25\ IN^2}$

$M = Pl/4$
$= 18{,}000(96)/4$
$= 432{,}000$ #-IN

FOR $Kl/r < 200$ (AISC 1.8.4)

FOR TOTAL DETECTOR:

$I_x = 0.0022(8\times8)(12)$
$= \underline{1.69\ IN^4}$

$S_x = 0.0088(8\times8)(12)$
$= \underline{6.758\ IN^3}$

STRESS ON EA. TUBE $= 432000/6.758$
$= 63{,}924$ PSI <u>N.G.</u>

∴ <u>SPREADER BAR REQ'D.</u>

CHECK MODULE FOR ACTUAL LOAD:

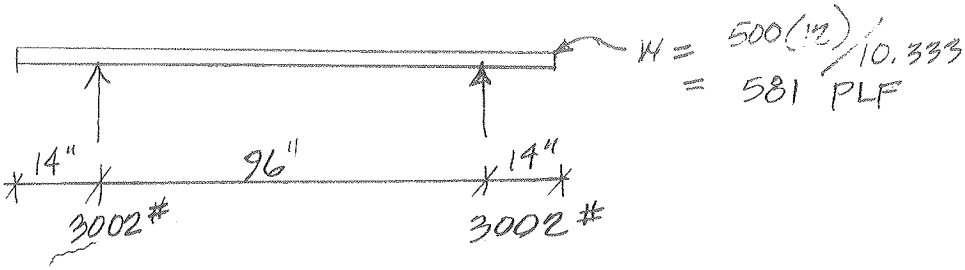

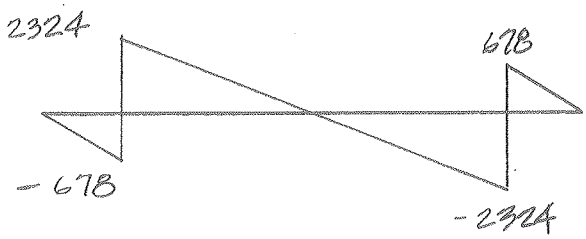

$M_{NEG} = \frac{1}{2}(14)(678)$
$= 4746$ #-IN

$M_{POS} = \frac{1}{2}(2324)(96/2)$
$= 55\,776$ #-IN

$f_b = 4746/6.758$
$= 702$ psi

$f_b = 55776/6.758$
$= 8253$ psi

MAX $Kl/r = 200$
$l_{MAX} = 200(.1548)$
$= 30.96''$

<u>MODULES MUST BE BANDED @ 30" INTERVALS</u>

APPROX. DEFLECTION:

@ $l/\sqrt{3}$ $\Delta = \frac{.048(55.4)}{24(29{,}000)(1.69)}\left((96)^3 - 2(96)(55.4)^2 + (55.4)^3\right) - .03208\frac{.048(14)^2(96)^2}{29{,}000(1.69)}$

$= 1.052 - 0.057$
$= 0.995'' > l/180 = 0.53''$ N.G.

TRY 3 MODULE SUPPORTS

$\Delta_{APPROX} = \frac{5(0.048)(48)^4}{384(29{,}000)(1.69)} = 0.07'' < 0.53''$ <u>ok</u>

FROM COMPUTER OUTPUT

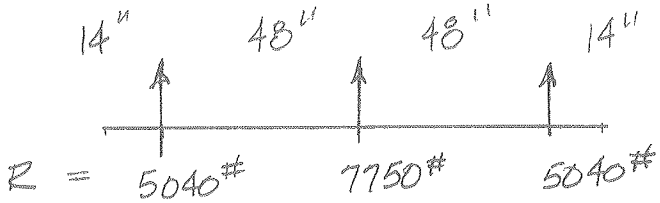

LIFTING FIXTURE DESIGN:

SHEAR:

$A_{REQ'D} = 7750/14400$
$= 0.54 \text{ IN}^2$

MOMENT:

$M = 5040(48)$
$= 241920 \text{ \#-IN}$

ASSUME $F_b = 21.6$ KSI FOR TRIAL SECTION

$S_x = 241920/21{,}600$
$= 11.2 \text{ IN}^3$

REDESIGN FOR 16 MODULES:

TOTAL WEIGHT = 500 x 16
= 8000#

DESIGN LOAD = 3 x 8000#
= 24,000# FOR LIFTING FIXTURE

A) DETECTOR CHECK

$I_{TOT} = 16(8 \times 8)(0.0022)$
$= 2.25 \text{ IN}^4$

$S_{TOT} = 16(8 \times 8)(0.0088)$
$= 9.01 \text{ IN}^3$

$A_{TOT} = 16(8 \times 8)(0.0917)$
$= 93.9 \text{ IN}^2$

$W = 8000/10.333$
$= 774.2 \text{ \#/FT}$
$= 64.52 \text{ \#/IN}$

$f_v = 3470/93.9$
$= 37 \text{ psi} < 14,400 \text{ psi}$ ok

$M_{MAX} = 15,420 \text{ \#-IN}$

$f_b = 15420/9.01$
$= 1711 \text{ psi} < 0.6(36) = 21.6 \text{ KSI}$ ok

B) LIFTING FIXTURE:

SHEAR:

$A_{REQ'D} = 3(3740)/14{,}400$
$= 0.78''$ in^2

MOMENT:

$M_{MAX} = (3(2260))(48)$
$= 483{,}840$ #-IN 325,440 ?

FOR $f_b = 0.6(36) = 21.6$ KSI:

$S_{x\,REQ'D} = 483{,}840/21600$
$= 22.4\ IN^3$

FOR STEEL CHANNELS:

MIN. SIZE = 2 - C 9 × 15

$I_x = 2(51.0)$
$= 102\ IN^4$

$\Delta = Pl^3/3EI = 3(2260)(48)^3/3(29{,}000)(102)$
$= 0.08''$

$l/180 = 48/180 = 0.27'' > 0.08''$ ok

ALLOWABLE BENDING STRESS:

$F_b = \frac{12\times10^3 C_b}{ld/A_f} = 12\times10^3(1.0)/48(8.76)$ (AISC 1.5.1.4.5)
$= 28.5$ KSI > 21.6 KSI → USE 21.6 KSI ok

BOTTOM TUBE:

LOAD ON BOTTOM TUBE = 3(3740#)
= 11220#

SPAN = 16"

$M = 11220(16)/4$
$= 44880$ #-IN

$S_{REQ'D} = 44880/30{,}360$
$= 1.48\ IN^3$

FOR STEEL TUBE, $F_y = 46$ KSI

$F_b = 0.66(46)$
$= 30{,}360$ PSI

3×3×¼ TUBE $S_x = 2.10$ OK

WELD REQUIRED BETWEEN TUBE AND CHANNELS:

P = 11220#

FOR 1/16" WELD & E70XX ELECTRODES:

F_V = 0.928 K/IN = 928#/IN

FOR 3/16" WELD:

3(928) = 2784#/IN

11220/2784 = 4.03 INCHES OF 3/16" WELD

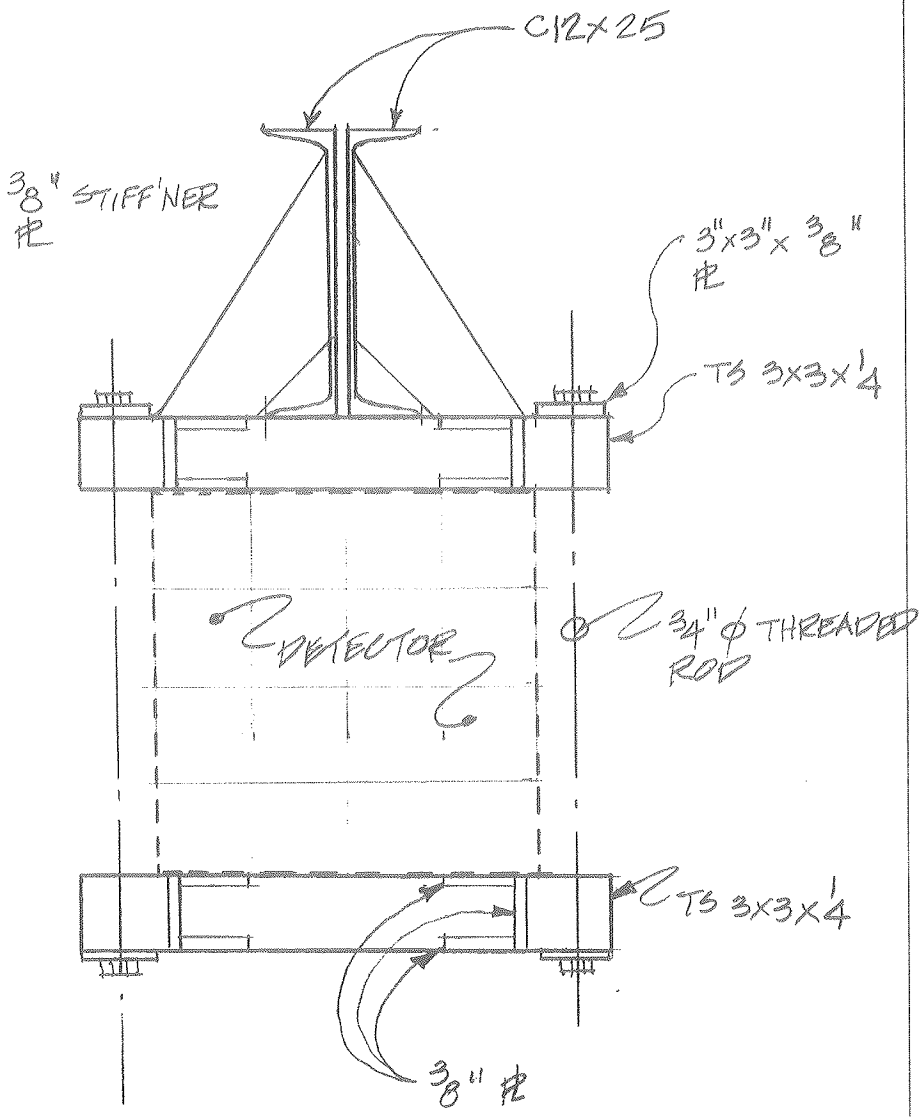

SECTION A-A

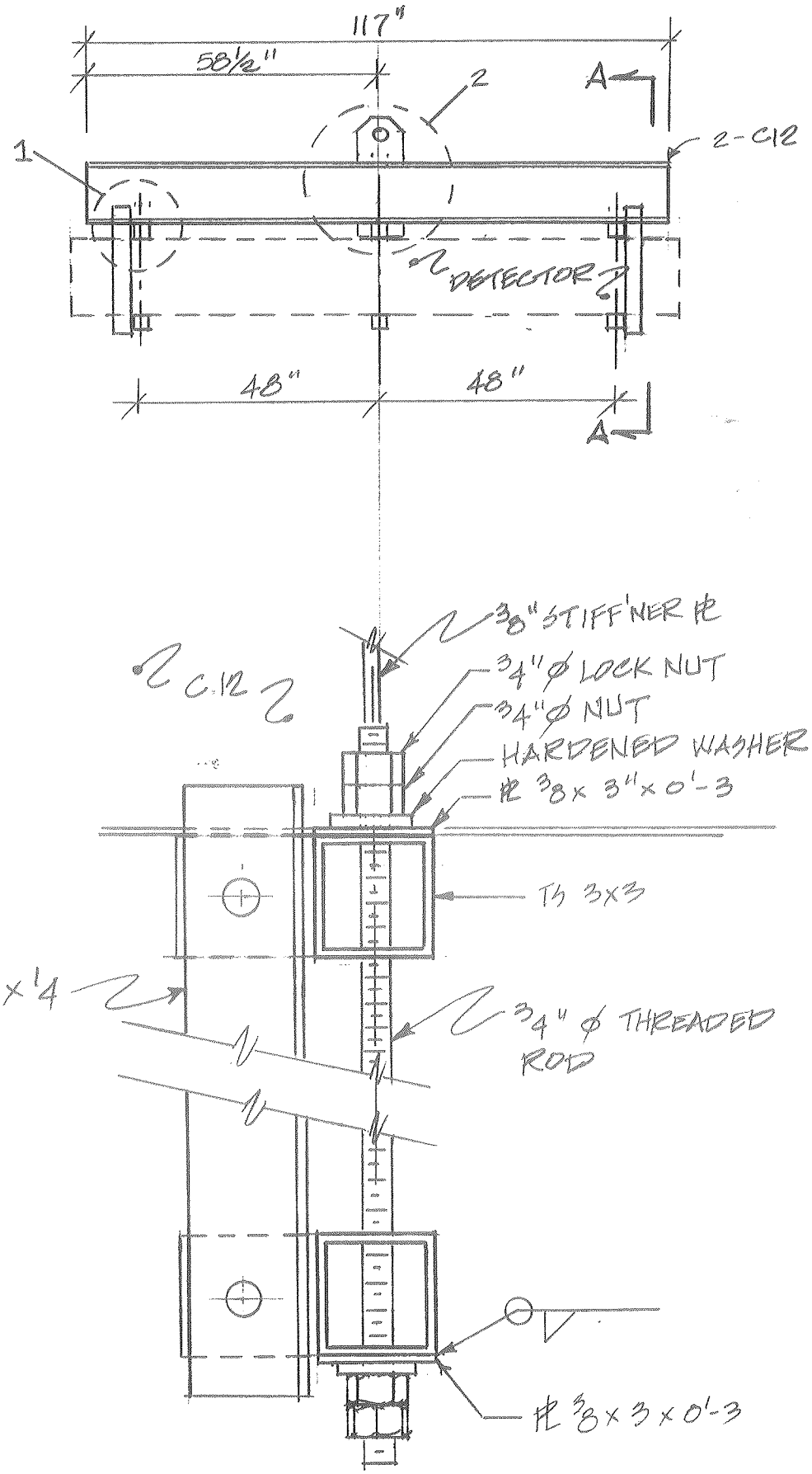
117"
58½"
2
A
1
2-C12
DETECTOR
48"
48"
A
C12
3/8" STIFFNER PL
3/4" ø LOCK NUT
3/4" ø NUT
HARDENED WASHER
PL 3/8 x 3" x 0'-3
TS 3x3
L 3x3x1/4
3/4" ø THREADED ROD
PL 3/8 x 3 x 0'-3

DETAIL 1

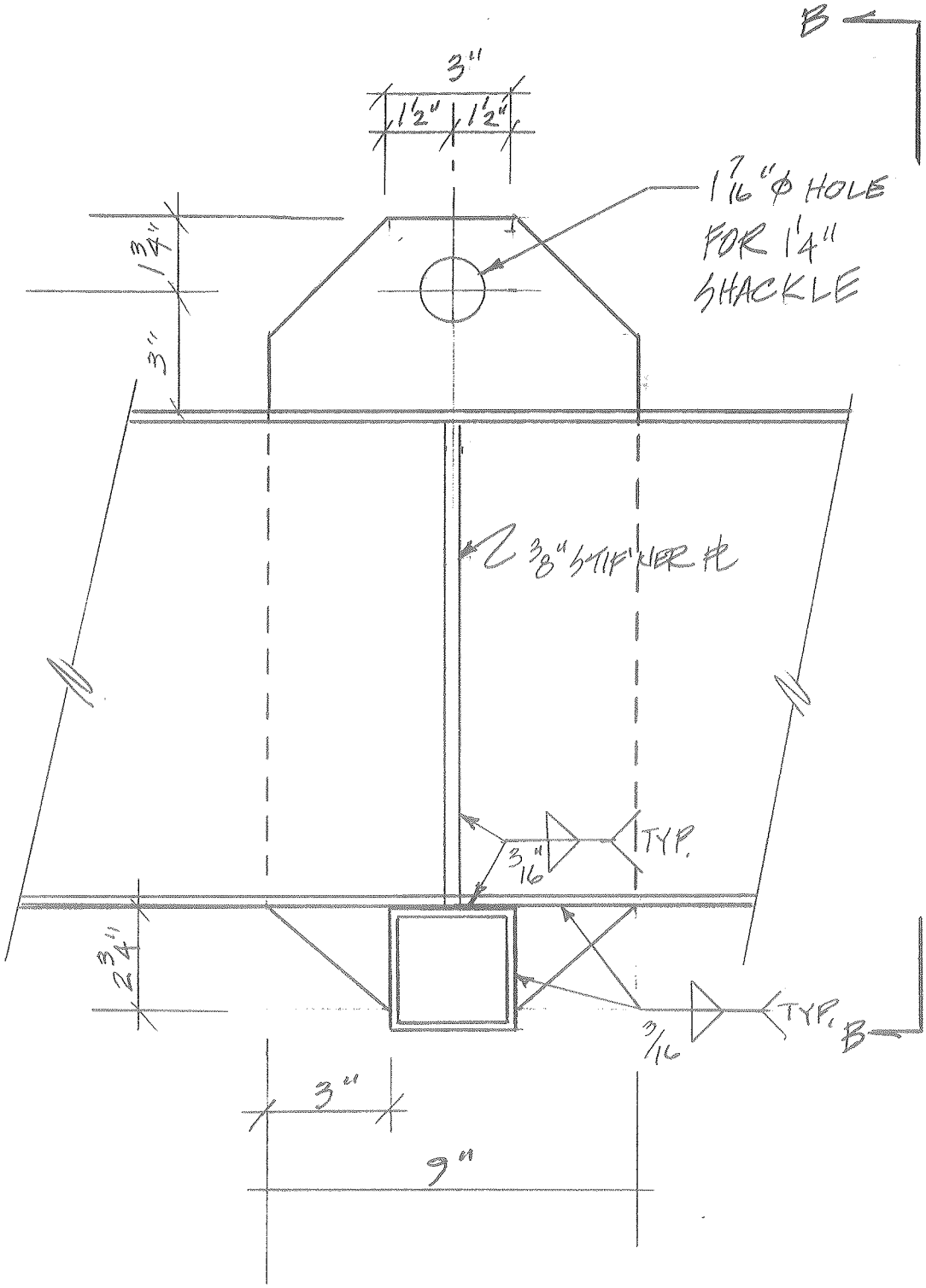
B
3"
1½"
1½"
1 7/16" Φ HOLE
FOR 1¼"
SHACKLE
¾"
3"
3/8" STIFFNER PL
3/16"
TYP.
¾"
3/16
TYP.
B
3"
9"

DETAIL 2

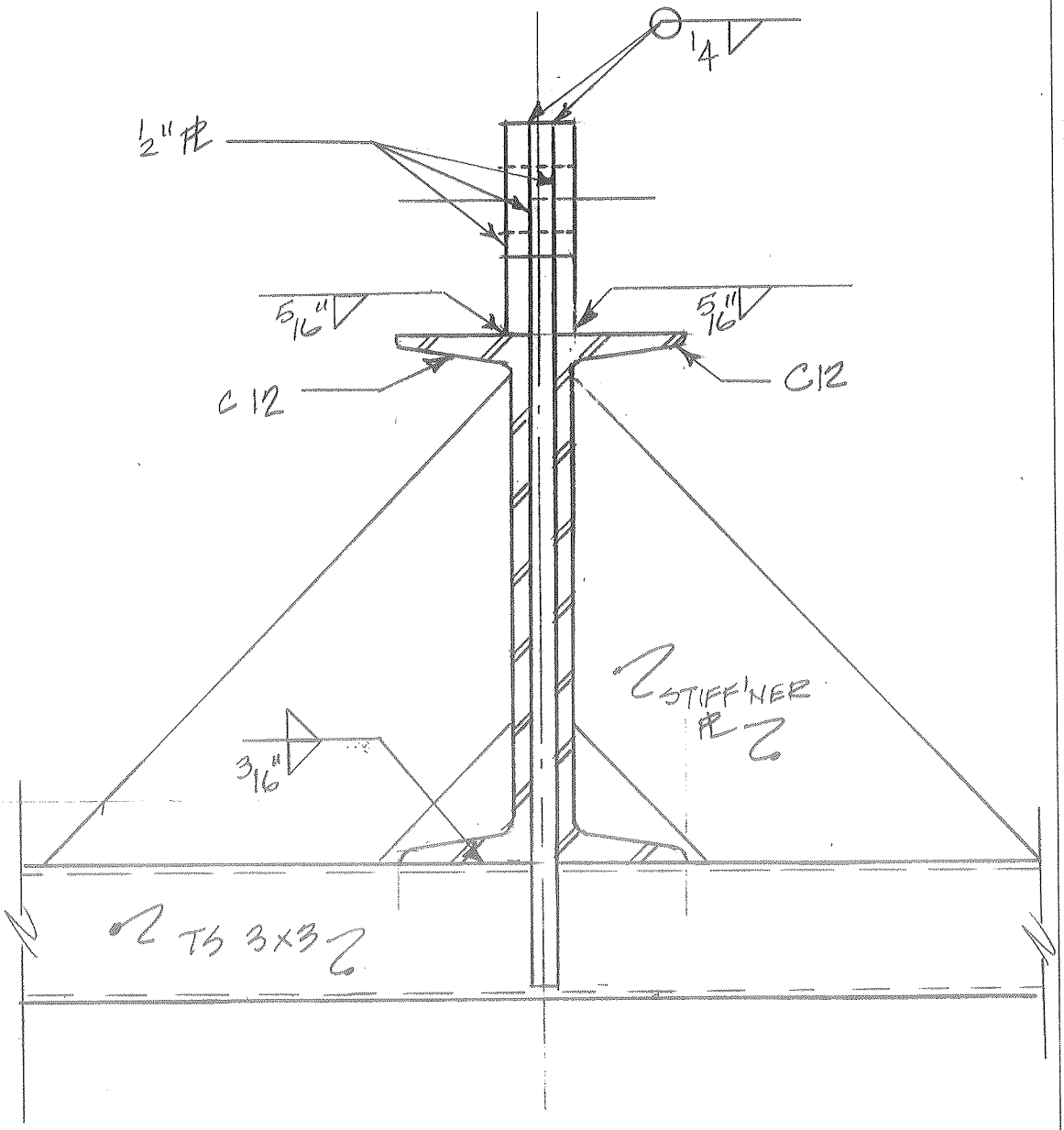

SECTION B-B

CHECK LIFTING PLATE:

$P = 8000(3) = 24{,}000^{\#}$

BEARING:

$F_p = 0.90 F_y$ (AISC 1.5.1.5.1)
$= 0.90(36)$
$= 32.4$ KSI

BEARING AREA $= 0.75(\pi(1.375))/2$
$= 1.62 \text{ IN}^2$

$f_p = 24{,}000/1.62$
$= 14{,}815$ PSI $< 32{,}400$ PSI ok

TEAR-OUT:

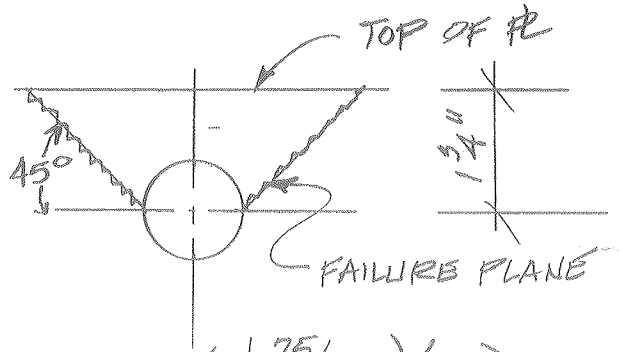

SHEAR AREA $= 2(1.75/.707)(.75)$
$= 3.71 \text{ IN}^2$

$F_v = 0.40 F_y$ (AISC 1.5.1.2.1)
$= 0.40(36)$
$= 14.4$ KSI

$f_v = 24{,}000/3.71$
$= 6500$ PSI $< 14{,}400$ PSI ok

12 MODULES
(LIFTING . .XTURE)

Module B-3: Multi-Span Beams Under Transverse Loading

```
        * S P A N  1 *
L1 = 14
E1 = 29.e6          I1 = 1.69
w1 = 144
        * S P A N  2 *
L2 = 96
E2 = 29.e6          I2 = 1.69
w2 = 144
        * S P A N  3 *
L3 = 14
E3 = 29.e6          I3 = 1.69
w3 = 144
```

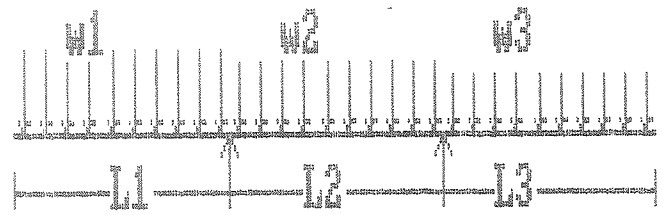

Reactions:
R1= 0.00E+00 R2= 8.92E+03 R3= 8.92E+03
R4= 0.00E+00

Deflection:

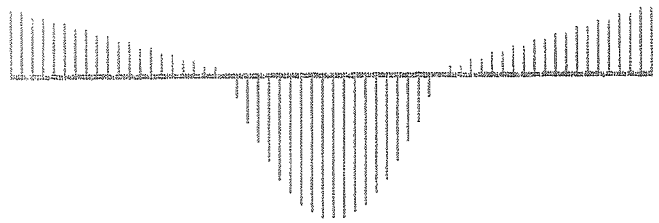

Ymax =-2.917679E+00 Span 2

ENTER F6 FOR MOMENT DIAGRAM OR
F7 FOR LOADING/BOUNDARY CONDITION MENU

F2PRINT F3DISP F6NEXT F7MENU F8REDO F9SAVE F10TOP

12 MODULES
(LIFTING IXTURE)

Module B-3: Multi-Span Beams Under Transverse Loading

```
        * S P A N  1 *
L1 = 14
E1 = 29.e6          I1 = 1.69
w1 = 144
        * S P A N  2 *
L2 = 48
E2 = 29.e6          I2 = 1.69
w2 = 144
        * S P A N  3 *
L3 = 48
E3 = 29.e6          I3 = 1.69
w3 = 144
        * S P A N  4 *
L4 = 14
E4 = 29.e6          I4 = 1.69
w4 = 144
```

Reactions:
R1= 0.00E+00 R2= 5.04E+03 R3= 7.75E+03
R4= 5.04E+03 R5= 0.00E+00

Deflection:

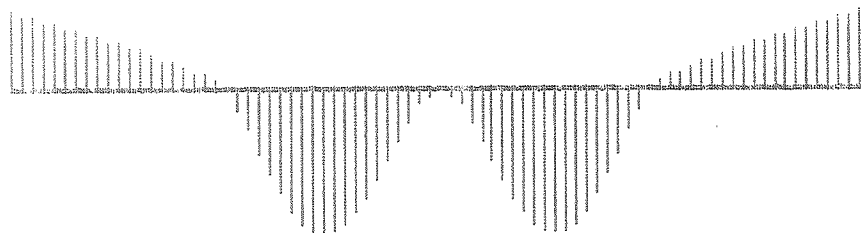

Ymax =-6.146444E-02 Span 2

ENTER F6 FOR MOMENT DIAGRAM OR
F7 FOR LOADING/BOUNDARY CONDITION MENU

F2PRINT F3DISP F6NEXT F7MENU F8REDO F9SAVE F10TOP

16 MODULES

Module B-3: Multi-Span Beams Under Transverse Loading (DETECTOR CHECK)

```
        * S P A N  1 *
L1 = 14
E1 = 29.e6          I1 = 2.25
w1 = 64.52
        * S P A N  2 *
L2 = 48
E2 = 29.e6          I2 = 2.25
w2 = 64.52
        * S P A N  3 *
L3 = 48
E3 = 29.e6          I3 = 2.25
w3 = 64.52
        * S P A N  4 *
L4 = 14
E4 = 29.e6          I4 = 2.25
w4 = 64.52
```

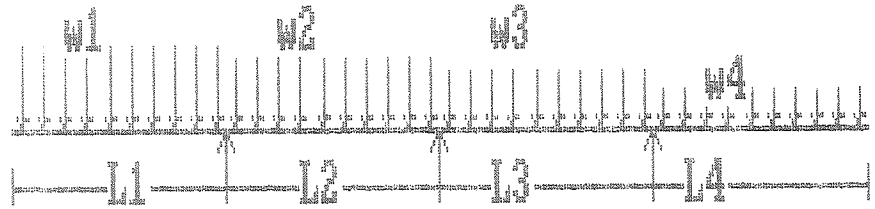

Reactions:
R1= 0.00E+00 R2= 2.26E+03 R3= 3.47E+03
R4= 2.26E+03 R5= 0.00E+00

Bending Moment:

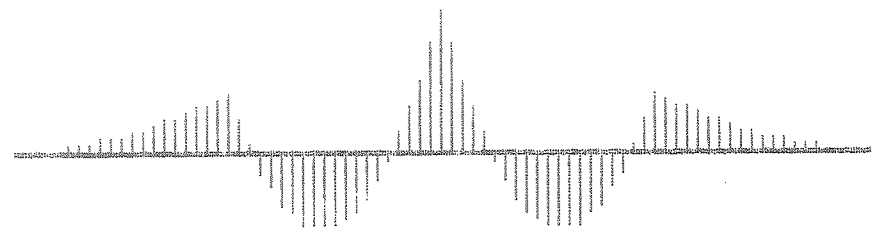

Mmax =-1.542028E+04 Span 3

ENTER F5 FOR DEFLECTION DIAGRAM, F6 FOR SHEAR DIAGRAM, OR
F7 FOR LOADING/BOUNDARY CONDITION MENU

F2PRINT F3DISP F5PREV F6NEXT F7MENU F8REDO F9SAVE F10TOP

Module B-3: Multi-Span Beams Under Transverse Loading (DETECT. - CHECK)

```
        * S P A N  1 *
L1 = 14
E1 = 29.e6          I1 = 2.25
w1 = 64.52
        * S P A N  2 *
L2 = 48
E2 = 29.e6          I2 = 2.25
w2 = 64.52
        * S P A N  3 *
L3 = 48
E3 = 29.e6          I3 = 2.25
w3 = 64.52
        * S P A N  4 *
L4 = 14
E4 = 29.e6          I4 = 2.25
w4 = 64.52
```

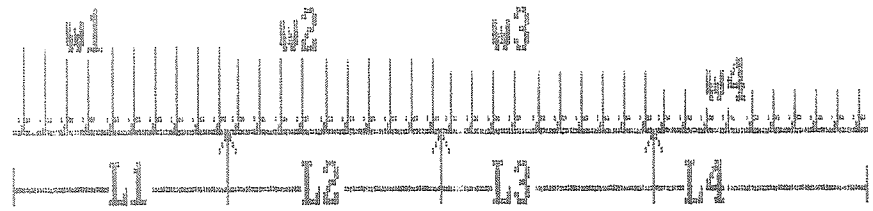

Reactions:
R1= 0.00E+00 R2= 2.26E+03 R3= 3.47E+03
R4= 2.26E+03 R5= 0.00E+00

Deflection:

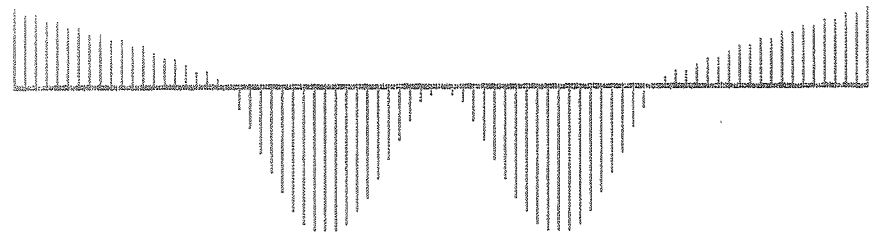

Ymax =-2.068521E-02 Span 2

ENTER F6 FOR MOMENT DIAGRAM OR
F7 FOR LOADING/BOUNDARY CONDITION MENU

F2PRINT F3DISP F6NEXT F7MENU F8REDO F9SAVE F10TOP

DESIGN LOAD = 8000#

1.25 (DESIGN LOAD) = TEST LOAD

= 10,000#

USE ONE "B" BLOCK P = 10150# W/ WF BEAM SPREADER BAR.

CHECK WF STEEL BEAM:

TRY W 10 X 26 $I_x = 144\ in^4$ $S_x = 27.9\ in^3$
$r = 4.35$ $r_T = 1.54$

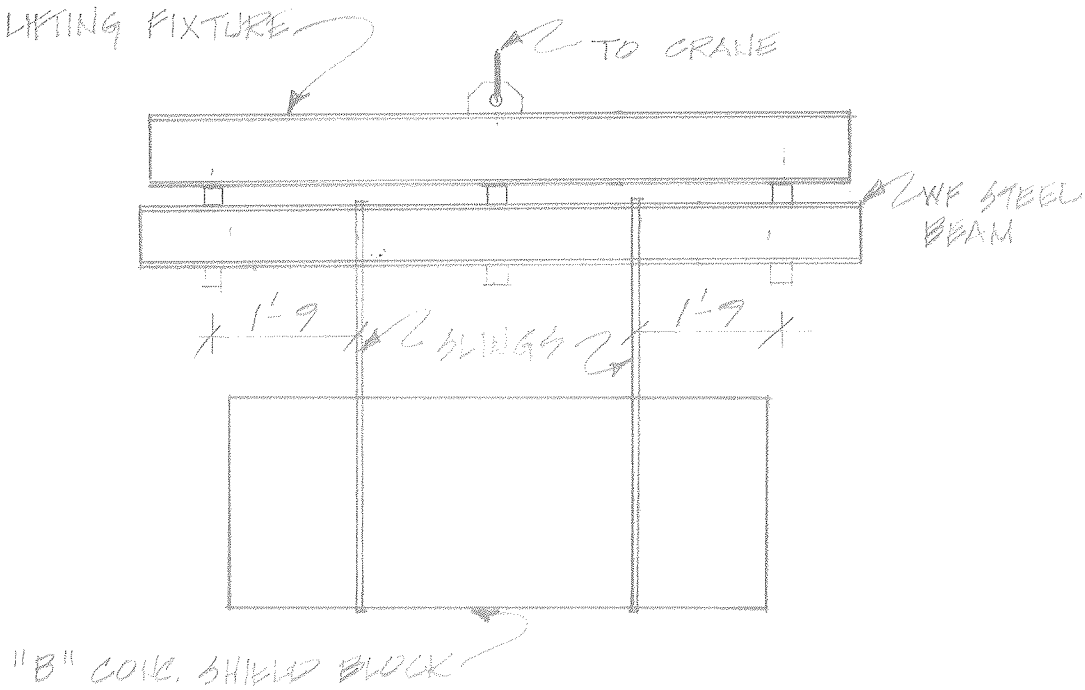

REACTION @ CENTER SUPPORT DUE TO 1.25(DESIGN LOAD) =

$w = (10150)/8.0$
$= 1268.75\ \#/FT$

$R_{CTR} = 1.25(1268.75)(4.0)$
$= 6343.75\#$

TRY SLINGS @ 1'-9 FROM END SUPPORTS:

$R_{CTR} = \frac{5075(1.75)}{(4.0)^3}\left(3(4)^2 - (1.75)^2\right)$

$= 6236\# \approx 6344\#$ ok

MAX. BEAM SHEAR = 6236#

$f_v = 6236/7.61 = 820$ psi $< 0.4(36{,}000) = 14400$ psi ok

MAX BEAM MOMENT:

W/ 2 LOADS:

$$\frac{5075(1.75)(2.25)}{2(4)^2}(2(4) - 2.25)$$

$= 3591$ #FT

W/ 1 LOAD:

$$\frac{5075(1.75)(2.25)}{4(4)^3}(4(4)^2 - 1.75(4+1.75))$$

$= 4201$ #FT

$f_b = (12)4201/27.9 = 1807$ psi

$\ell/r_T = 4.0(12)/1.54 = 31.2 < 53 \therefore F_b = 0.66F_y$

$F_b = 0.66(36000)$
$= 23{,}800$ psi > 1807 psi ok

HARP TUBE CALORIMETER
LIFTING FIXTURE

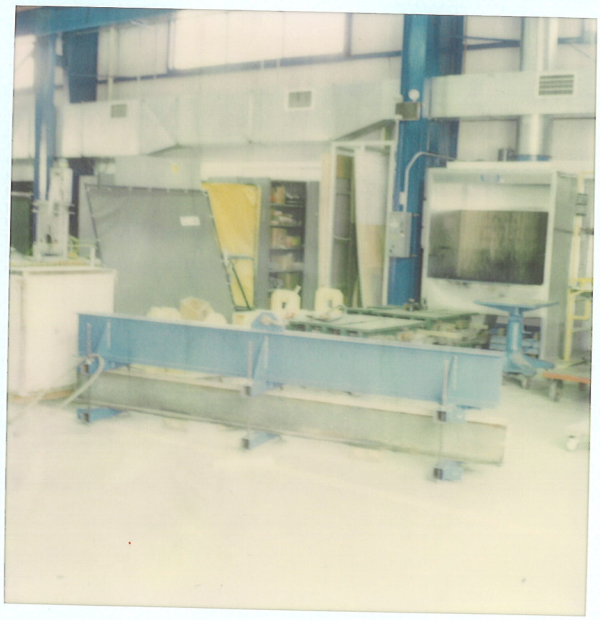

HARP TUBE CALORIMETER
LIFTING FIXTURE

LOAD TEST
5/11/93

LOAD TEST
5/11/93

LOAD TEST
5/11/93 1:35 PM

LOAD TEST
5/11/93 1:35 PM