LIFTING DEVICE

DEVICE NAME: 5 TON CRANE, NW1 (NEUTRINO TARGET HALL)

ENGINEERING NOTE NUMBER: 56

DRAWING NUMBER: N.A.

APPLICABLE STANDARD: ASME B30.2a-1991
CHAPTER 2-2, SECTION 2-2.2

RATED LOAD: 10×10^3 #

TEST LOAD: 12.5×10^3 #

TEST LOAD PERCENT: 125%

LAST LOAD TEST DATE: 3/16/93

COLOR: YELLOW

STRESS CALCULATIONS:

Done by: E.M. Villegas

Date: 3/10/93

Reviewed by: [illegible]

Date: 3/15/93

REMARKS:

SEE ATTACHMENT #1 FOR TESTING PROCEDURES.
TEST WITNESS BY J. HESS, RD/ES&H, DON CARPENTER & EM. VILLEGAS OF RD/MSD.

IDENTIFICATION:

Engineering Note Number & Rated Load Must be Clearly Marked On a Conspicuous Surface.

FERMILAB
ENGINEERING NOTE

SECTION	PROJECT	SERIAL-CATEGORY	PAGE
HSG	E815		1

SUBJECT: MEASURED DIMENSIONS ON MODIFICATIONS TO PURCHASED 5 TON CRANE IN ENCL. NW1 (NEUTRINO TGT. HALL)

NAME: E M Dilgar

DATE: 3/9/93

REVISION DATE:

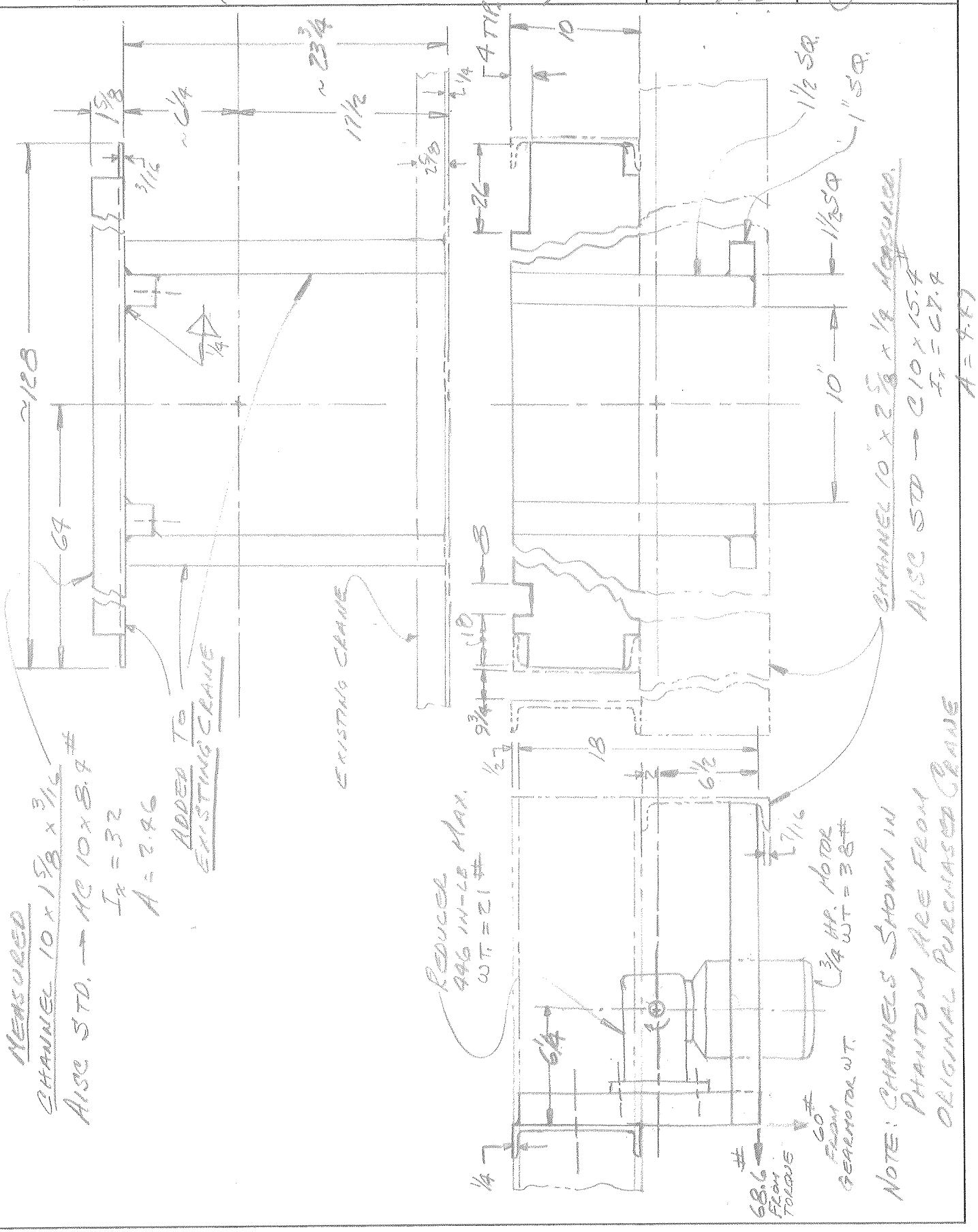

FERMILAB
ENGINEERING NOTE

SECTION	PROJECT	SERIAL-CATEGORY	PAGE
			2

SUBJECT: FEA CHANNEL MODELS

NAME: E M Villegas

DATE: 3/9/93

REVISION DATE:

ACTUAL CHANNEL USED: AISC MC 10 x 8.4#

$I_x = 32.0$

$A = 2.46$

FOR FEA SHELL MODEL USE:

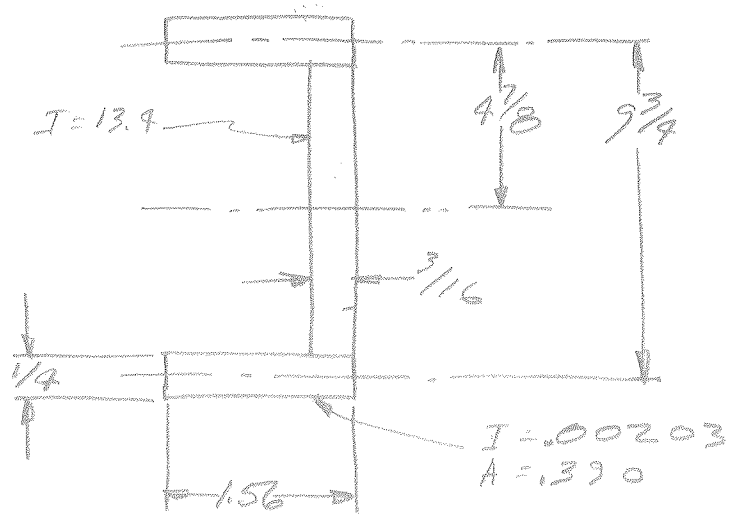

$$I_x = 13.4 + 2(.00203 + .390 \times 4.875^2)$$

$$= 31.94 \approx 32.0$$

EXISTING CHANNEL ON PURCHASED CRANE, AISC C10 x 15.4#

$I_x = 67.4$

$A = 4.49$

FOR FEA SHELL MODEL USE:

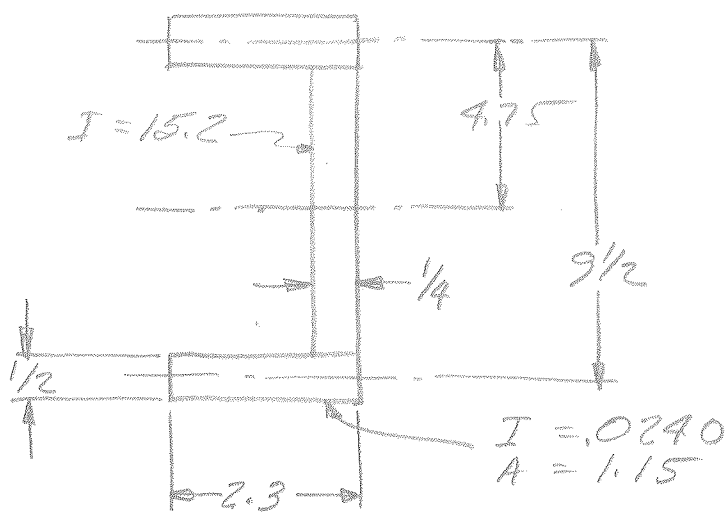

$$I_x = 15.2 + 2(.0240 + 1.15 \times 4.75^2)$$

$$= 67.14 \approx 67.4$$

FERMILAB
ENGINEERING NOTE

SECTION	PROJECT	SERIAL-CATEGORY	PAGE
			3

SUBJECT: FEA SHELL MODEL OF MODIFICATIONS TO PURCHASED 5 TON CRANE IN ENCL NW1 (NEUTRINO TGT HALL)

NAME: E M Villegas

DATE: 3/9/93

REVISION DATE:

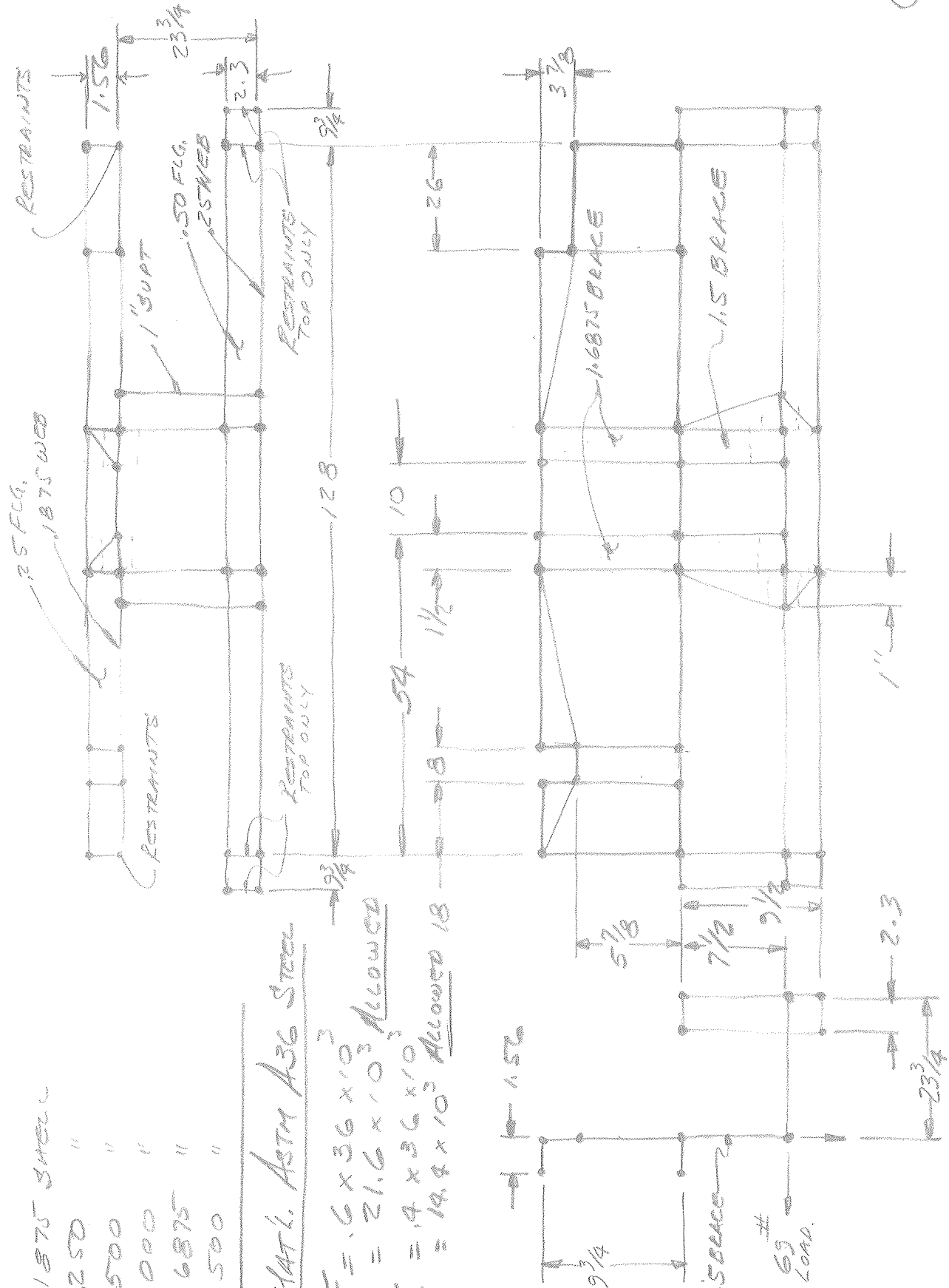

STRESS MODEL OF MODIFICATIONS TO 5 TON CRANE IN NW1

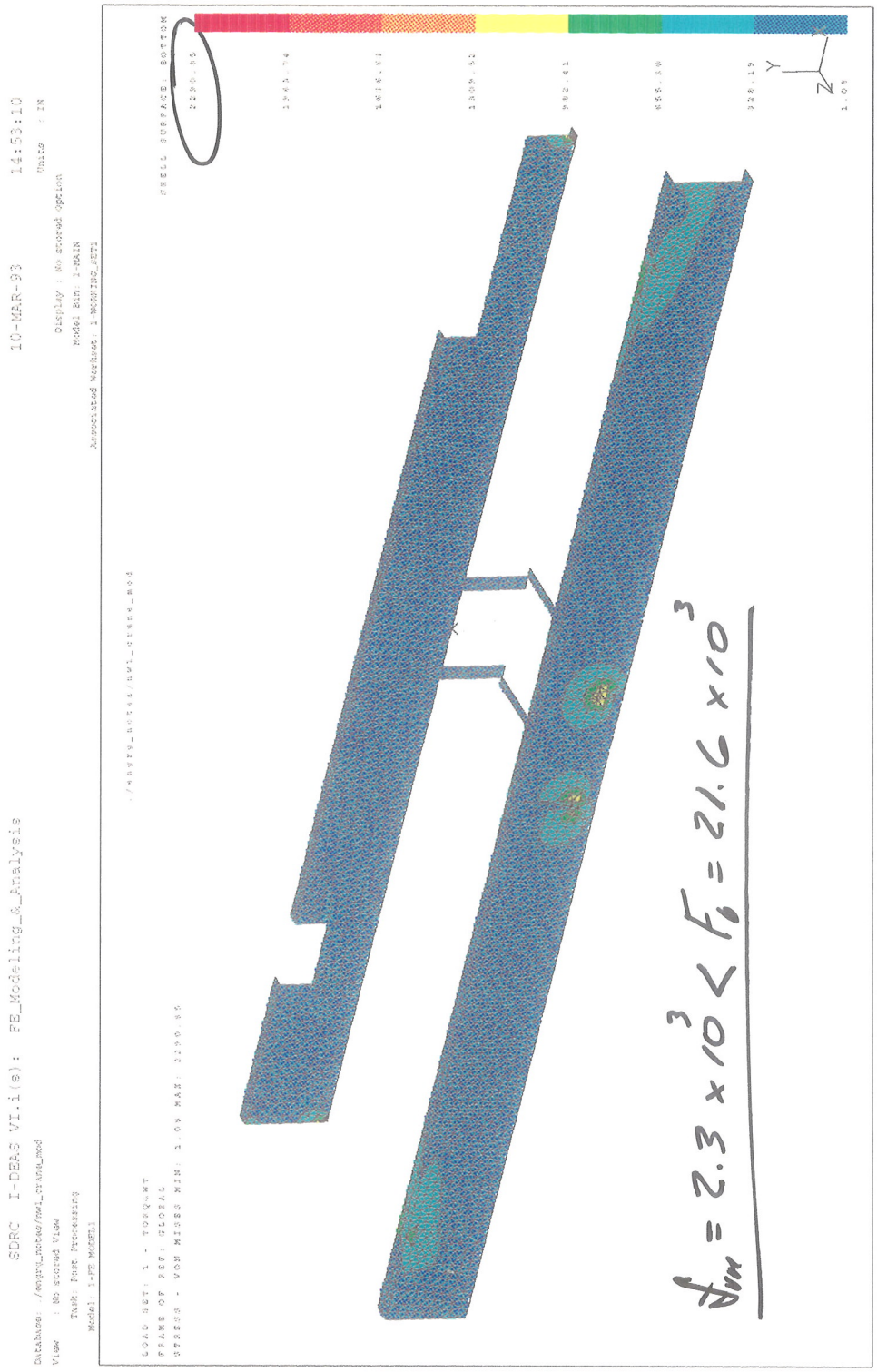

SHEAR MODEL OF MODIFICATIONS TO 5 TON CRANE IN NW1

Pg #5

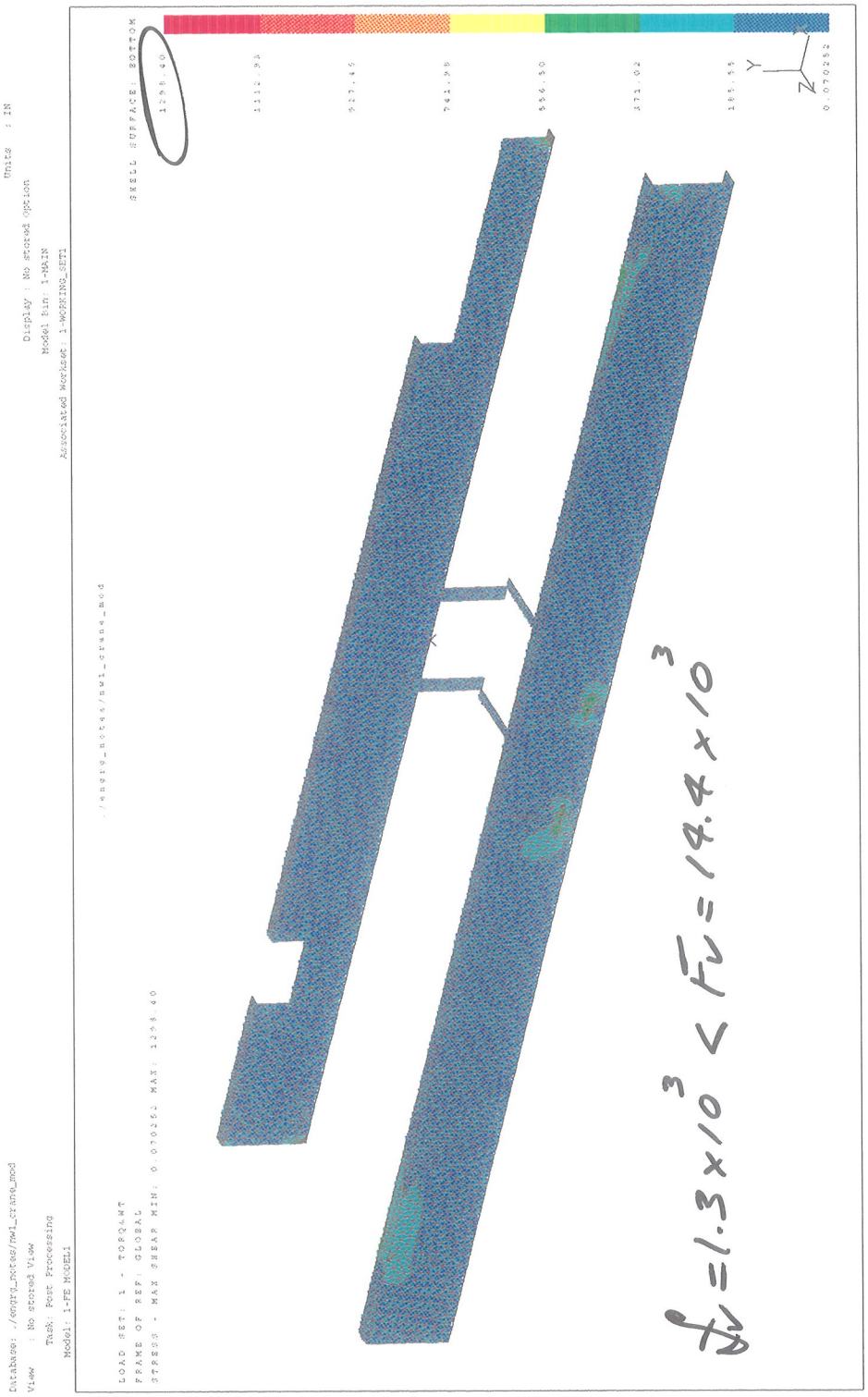

DEFLECTION MODEL OF MODIFICATIONS TO 5 TON CRANE IN NW1

Pg #6

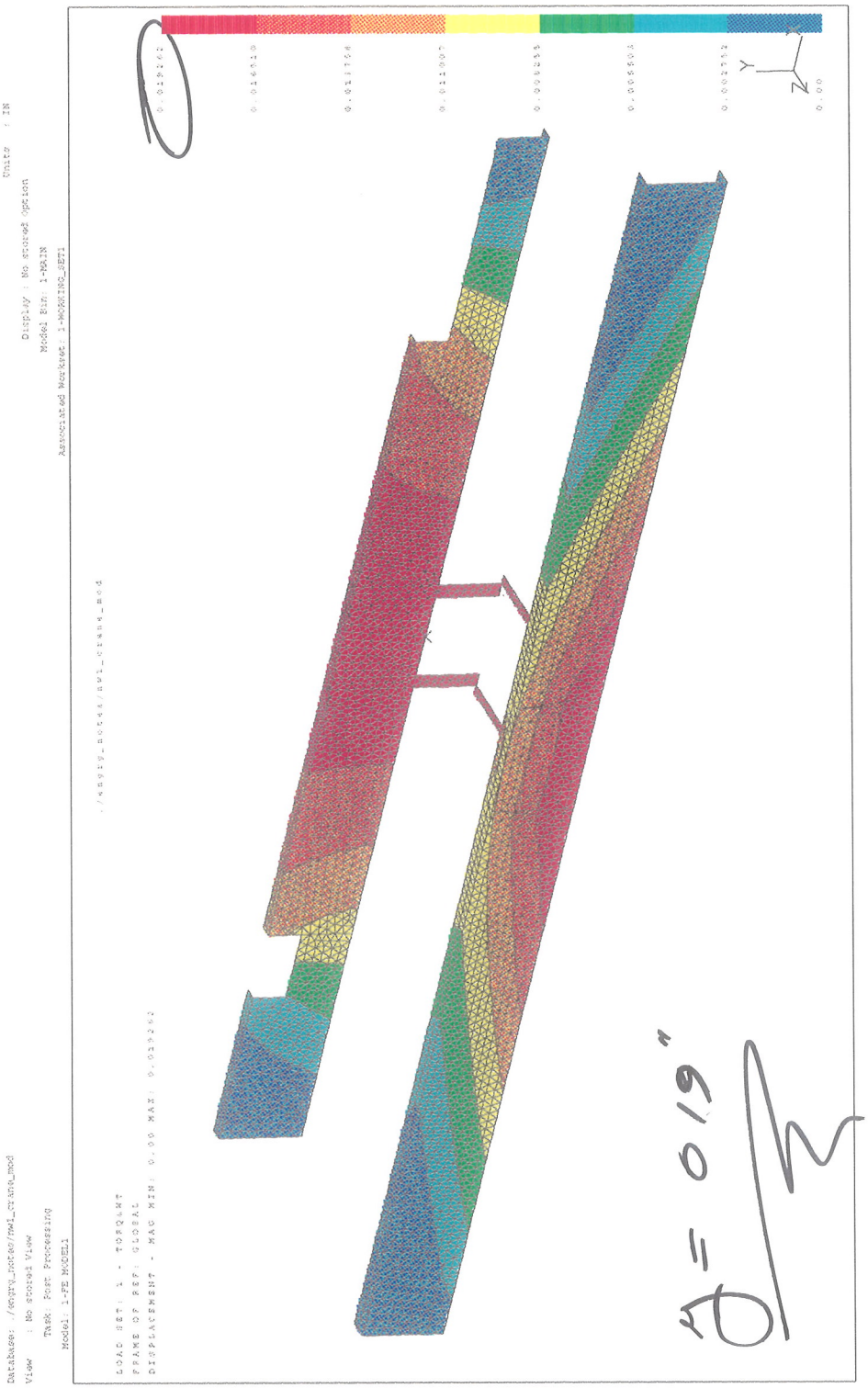

ATTACHMENT #1

(b) A crane that is used in infrequent service, which has been idle for a period of 1 year or more, shall be inspected before being placed in service in accordance with the requirements listed in para. 2-2.1.3.

2-2.1.5 Inspection Records. Dated inspection reports of comparable records shall be made on critical items such as hoisting machinery, sheaves, hooks, chains, ropes, and other lifting devices as listed in para. 2-2.1.3. Records should be available to appointed personnel.

Section 2-2.2 — Testing

(a) **2-2.2.1 Operational Tests.** Prior to initial use, all new, reinstalled, altered, repaired, or modified cranes shall be tested by a designated person to insure compliance with this volume, including the following functions:

(a) lifting and lowering;

(b) trolley travel;

(c) bridge travel;

(d) limit switches. The trip setting of hoist limit devices shall be determined by tests with an empty hook traveling in increasing speeds up to the maximum speed. The actuating mechanism of the upper limit device shall be located so that it will trip the device under all conditions, in sufficient time to prevent contact of the hook or load block with any part of the trolley or crane.

(e) locking, limiting, and indicating devices, if provided.

2-2.2.2 Rated Load Test

(a) Prior to initial use, all new, extensively repaired, and altered cranes should be tested and inspected by or under the direction of a designated or authorized person, and a written report be furnished by such person, confirming the load rating of the crane. The load rating should not be more than 80% of the maximum load sustained during the test. Test loads shall not be more than 125% of the rated load, unless otherwise recommended by the manufacturer. The test reports shall be placed on file where readily available to appointed personnel.

(b) The rated load test, if made, shall consist of the following operations as a minimum requirement.

(1) Hoist the test load a distance to assure that the load is supported by the crane and held by the hoist brakes(s).

(2) Transport the test load by means of the trolley for the full length of the bridge.

(3) Transport the test load by means of the bridge for the full length of the runway in one direction with the trolley as close to the extreme right-hand end of the crane as practical, and in the other direction with the trolley as close to the extreme left-hand end of the crane as practical.

(4) Lower the test load, and stop and hold the load with the brakes(s).

Section 2-2.3 — Maintenance

2-2.3.1 Preventive Maintenance

(a) A preventive maintenance program should be established and based on the crane manufacturer's or a qualified person's recommendation. Dated records should be kept where readily available to appointed personnel.

(b) Replacement parts shall be at least equal to the original manufacturer's specifications.

2-2.3.2 Maintenance Procedure (a)

(a) The following precautions shall be taken before performing maintenance on a crane.

(1) The crane shall be moved to a location where it will cause the least interference with other cranes and operations in the area.

(2) If a load is attached to the crane, it shall be landed.

(3) All controllers shall be placed in the off position.

(4) A lockout/tagout procedure shall be performed [see para. 2-3.5.1(c)].

(5) Warning signs and barriers shall be utilized on the floor beneath the crane where overhead maintenance work creates a hazard.

(6) If the runway remains energized, stops or a signalperson(s), located full-time at a visual vantage point for observing the approach of an active crane(s), shall be provided to prohibit contact by the active crane(s) with the idle crane; with persons performing maintenance; and with equipment used in performing the maintenance.

(7) A guard or barrier shall be installed between adjacent runways for the length of the established work area to prevent contact between persons performing maintenance and a crane on the adjacent runway.

(b) The following precautions shall be taken before performing maintenance on a crane runway, the runway support structure, the runway conductor system, and the areas of the building in the path of travel of the crane bridge or trolley.

(1) A lockout/tagout procedure shall be performed [see para. 2-3.5.1(c)].