Fermilab

Particle Physics Division

Mechanical Department Engineering Note

Number: MD-ENG-489 Date: 10/11/2013

Project: Minerva

Project Internal Reference:

Title: Minerva West FESB platform

Author(s): Jim Kilmer

Reviewer(s): Dave Pushka

Key Words:

Abstract/Summary:
This note contains the structural calculations for a small working surface on the west side of the Minerva detector used for servicing the FESB modules.

Applicable Codes: AISC Manual of Steel Construction, Ninth Edition.

Structural Calculations for Minerva FESB platform
Jim Kilmer
10/10/2013

Minerva needs a new walking platform on the west side of their detector to reach some FESB modules high on the side of the detector. The space where a deck will fit is about 17 inches wide between the detector support frame and the stairway leading up to the Minos upper platform. Since the deck is so small set the maximum load on the entire deck at 500 pounds.

Posts on the west support one side of the deck and the other side is supported by the rail for the movable PMT access platform. The posts are 3" by 2" by 1/4" wall rectangular tubing. From the AISC Manual of Steel Construction, Ninth edition as a column with an unsupported height of 111.5 inches the Maximum Allowable load is about 12,000 pounds (page 3-52). This is much larger than a 500 pound load so the column load is OK.

The decking from the columns is supported by angles welded to the columns made from 4" by 4" by 3/8" angle iron. Find the required weld. All welds are done using E70XX rod. The welds are in shear. Assume welds are 1/4" fillets and 4" long on each side

$t := \frac{0.25 \cdot in}{1.414}$ $\qquad$ $psi := \frac{lb}{in^2}$

$t = 0.177 \cdot in$

$l := 4 \cdot in \cdot 2$ $\qquad$ two 4 inch long welds

$A := t \cdot l$

$A = 1.414 \cdot in^2$

$\sigma shear := \frac{500 \cdot lb}{A}$

$\sigma shear = 353.5 \cdot psi$

Allowable weld shear = 0.3 X 70 Ksi = 21 Ksi

This is much less than the allowable stress in shear for a 70,000 psi yield weld rod so the welds are OK.

Install a small gusset on the inside of the 4" by 4" angle to keep the angle piece from bending.

The west side of the gratings are supported on 6" by 4" by 5/16" angle pieces bolted to the 4" by 4" shelf pieces. These angles must support the bending load of weight on the deck. The upward 6' leg serves as a toe kick as well. Here are the important numbers for this size angle from the AISC Manual:

$Ixx := 11.4 \cdot in^4$

$Sxx := 2.79 in^3$

$y := 1.92 \cdot in$

Use Case 7 of the Manual, page 2-298 for a concentrated load at the center of the member. Assume that all of the load is taken on this member and the other side provides no support as a worst case. (The other side support is an 8 inch Ibeam that is far oversized to carry the PMT access platform and a 500 pound load on that platform. There is another engineering note for the PMT Access platform that includes this Ibeam.)

$P := 500 \cdot lb$ $\quad$ $l := 68.5 \cdot in$ $\quad$ Use the longest length piece.

$$Mmax := \frac{P \cdot l}{4}$$

$Mmax = 8.563 \times 10^3 \cdot in \cdot lb$

$$\sigma bend := \frac{Mmax \cdot y}{Ixx}$$

$\sigma bend = 1.442 \times 10^3 \cdot psi$

This bending stress is less than the allowable bending of 21.7 Ksi for 36 Ksi yeild angle iron so these members are OK for support of the gratings.

For the hand rails OSHA dictates that they must support 200 pounds. The 3" by 2" rectangular tubing must take this load in bending as in case 26 of the AISC manual on page 2-305. First assume that one tube must take all of the bending load which is the worst case if someone is leaning on the post itself.

$P := 200 \cdot lb$

$L1 := 111.5 \cdot in$

$a := 168.22 \cdot in - L1$

$Mr2 := P \cdot a$

$Ix := 2.21 \cdot in^4$ $\quad Sx := 1.47 \cdot in^3$ For 3" by 2" by 1/4" wall tubing

$$fb := \frac{Mr2}{Sx}$$

$fb = 7.717 \times 10^3 \cdot psi$

In bending this column isOK as the allowable bending stres is Fb = 33 KSI.
Because this bending is in a column it is necessary to look at combined stresses

$$fa := \frac{500 \cdot lb}{2.09 \cdot in^2}$$ Actual compressive load

$fa = 239.234 \cdot psi$

Allowable compressive stress is calculated as on page 5-42 of the AISC Manual.

$E := 29000000 \cdot psi$

$Fy := 46000 \cdot psi$

$$Cc := \sqrt{\frac{2 \cdot \pi^2 E}{Fy}}$$

$Cc = 111.554$

$K := 1$

$r := 1.03 \cdot in$

$$\frac{K \cdot L1}{r} = 108.252$$

$$Fa := \frac{\left[1 - \frac{\left(\frac{K \cdot L1}{r}\right)^2}{2 \cdot Cc^2}\right] \cdot Fy}{\frac{5}{3} + 3 \cdot \frac{\left(\frac{K \cdot L1}{r}\right)}{8 \cdot Cc} - \frac{\left(\frac{K \cdot L1}{r}\right)^3}{8 \cdot Cc^3}}$$

$Fa = 1.27 \times 10^4 \cdot psi$ Allowable axial stress in compression for tubing

$Fb := 30360 \cdot psi$ Allowable bending stress for 46 KSI tubing yield

$$\frac{fa}{Fa} + \frac{fb}{Fb} = 0.273$$

This is much less than 1 so the combined stresses in the columns are OK.

For the railings use 2" by 2" by 3/16" square tubing. The load on the center to support then is 200 pounds. Use case 7 of the AISC Manual on page 2-298.

$P := 200 \cdot lb$

$Mbend := \frac{P \cdot 69 \cdot in}{4}$ Use the longest length railing section

$Itube := 0.668 \cdot in^4$ $y := 1.0 \cdot in$ Properties of the tubing

$Stube := 0.668 \cdot in^3$

$$\sigma tubebend := \frac{Mbend}{Stube}$$

$\sigma tubebend = 5.165 \times 10^3 \cdot psi$

This is OK as the maximum bending allowable stress is 66% of 46 KSI or 30 KSI.

The grating to be used for this platform is a fiberglass grating with a 1-1/2" by 1-1/2" square bar spacing and 1-1/2" thick. In the McMaster-Carr catalog iit would be the equivalent of 6919T66. From the attached Load and Deflection table a 2 foot unsupported length gives a maximum support load of 1000 pounds which is twice the rating this platform needs. Note that the unsupported length on this deck is approximately 17 inches.

REV	DESCRIPTION	DRAWN	DATE
		APPROVED	DATE

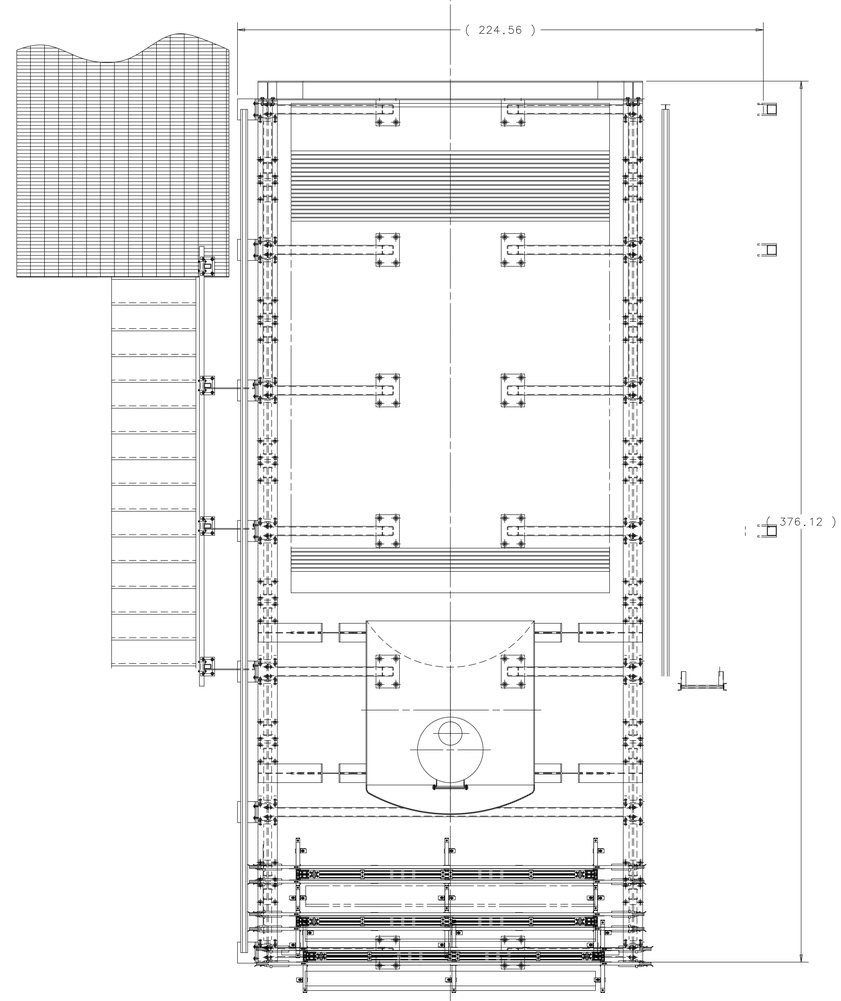

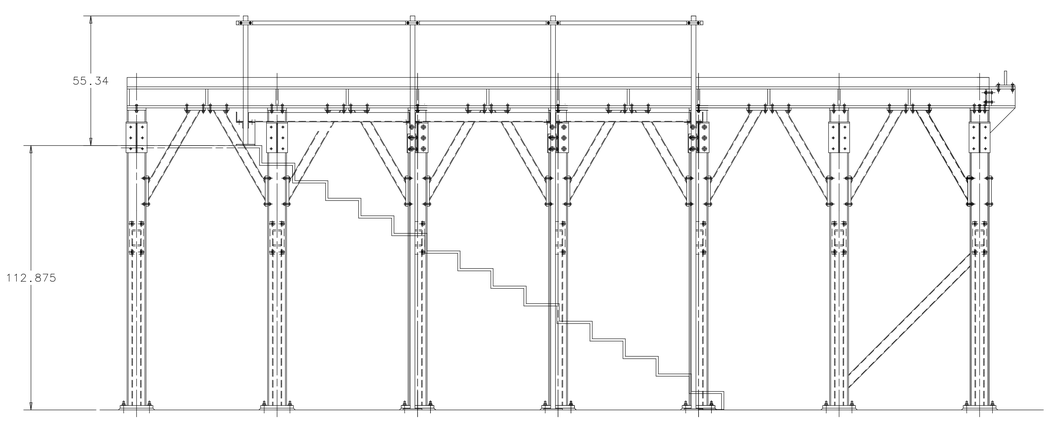

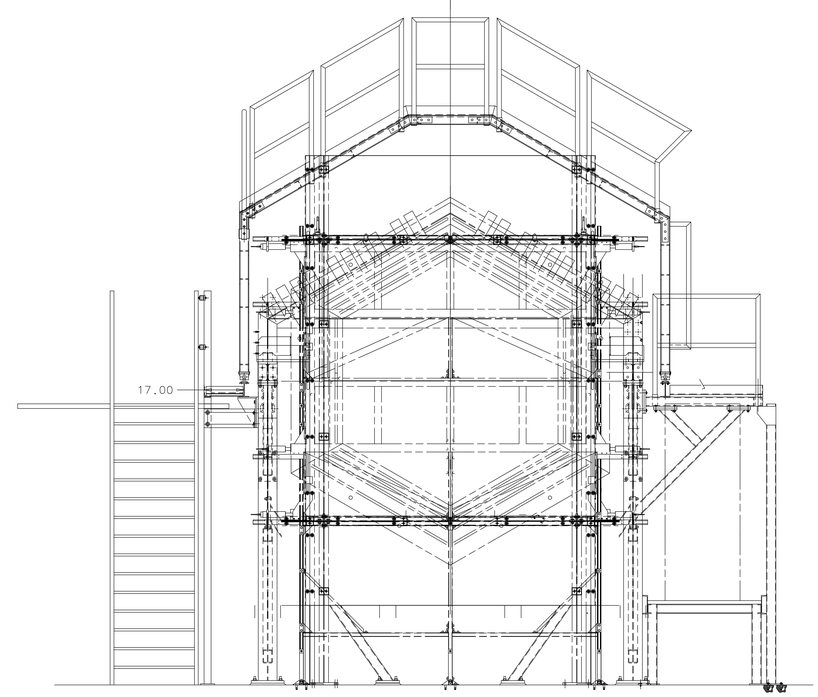

ITEM	PART NO.	DESCRIPTION OR SIZE	QTY.

PARTS LIST

UNLESS OTHERWISE SPECIFIED					
.XX	.XXX	ANGLES	ORIGINATOR	J.KILMER	24-FEB-2007
± .03	± ---	± ---	DRAWN	G.SMITH	24-FEB-2007
			CHECKED	W.CYKO	23-MAY-2007
			APPROVED	J.KILMER	06-JUN-2007

1. BREAK ALL SHARP EDGES .015 MAX.
2. DO NOT SCALE DRAWING.
3. DIMENSIONS BASED UPON ASME Y14.5M-1994
4. MAX. ALL MACH. SURFACES
5. DRAWING UNITS: U.S. INCH

USED ON

MATERIAL
SEE PARTS LIST ABOVE

FERMI NATIONAL ACCELERATOR LABORATORY
UNITED STATES DEPARTMENT OF ENERGY

MINERVA-MECH-PLANE ANALYSIS HEAVY FRAME AND BRIDGE ASSEMBLY

SCALE	DRAWING NUMBER	SHEET	REV
3:64	3938.300-ME-497171	1 OF 1	

CREATED WITH : Ideas12NXSeries GROUP: PPD/MECHANICAL DEPARTMENT

REV	DESCRIPTION	DRAWN	DATE
		APPROVED	DATE

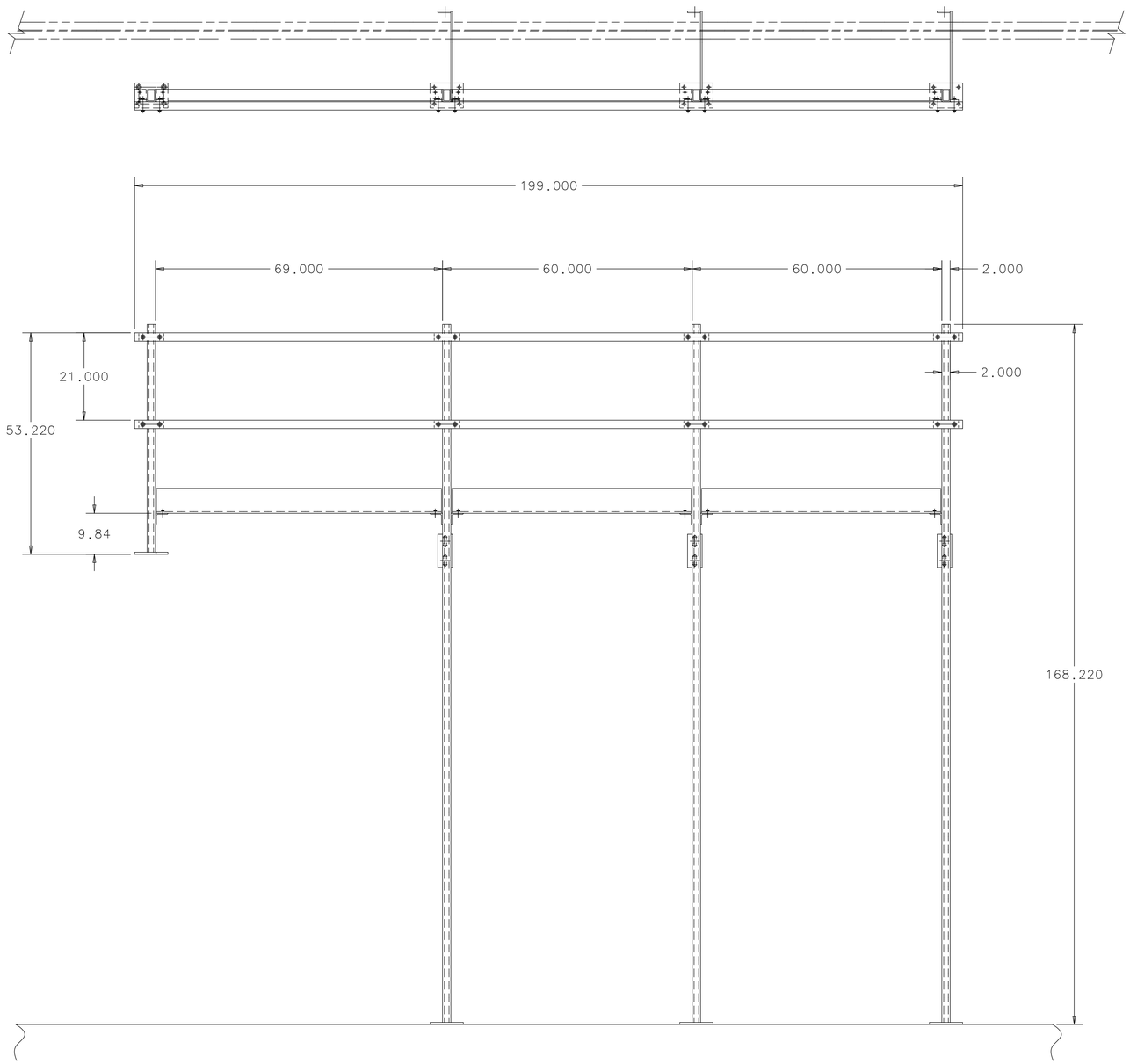

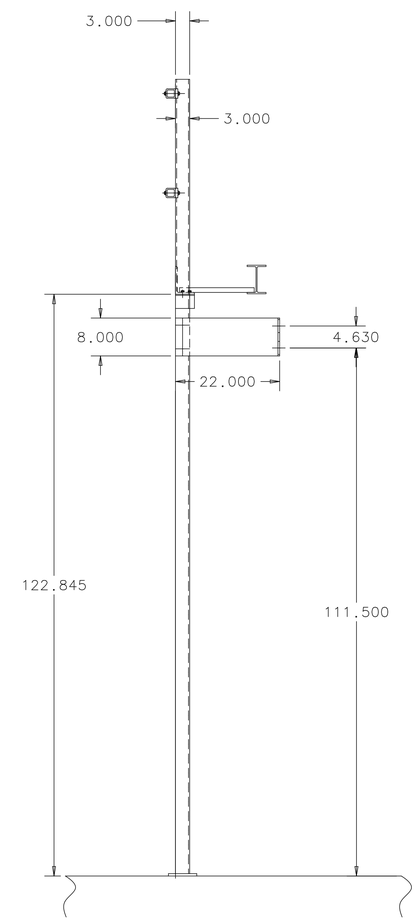

UNLESS OTHERWISE SPECIFIED	ORIGINATOR	J.KILMER	24-FEB-2007
	DRAWN	G.SMITH	24-FEB-2007
± ± ±	CHECKED		
1. BREAK ALL SHARP EDGES MAX.	APPROVED		
2. DO NOT SCALE DRAWING. 3. DIMENSIONS BASED UPON	USED ON		
4. MAX. ALL MACH. SURFACES √	MATERIAL	SEE PARTS LIST ABOVE	
5. DRAWING UNITS:			

FERMI NATIONAL ACCELERATOR LABORATORY
UNITED STATES DEPARTMENT OF ENERGY

MINERVA-MECH-PLANE ANALYSIS HEAVY FRAME WORK PLATFORM ASSEMBLY

SCALE	DRAWING NUMBER	SHEET	REV
1:16	3938.300-MD-497172	1 OF 1	

CREATED WITH : Ideas12NXSeries GROUP: PPD/MECHANICAL DEPARTMENT

Created: 06:44:38 on 17-10-13 (D-M-Y) By: gsmith State: 1-INITIAL

REV	DESCRIPTION	DRAWN	DATE
		APPROVED	DATE

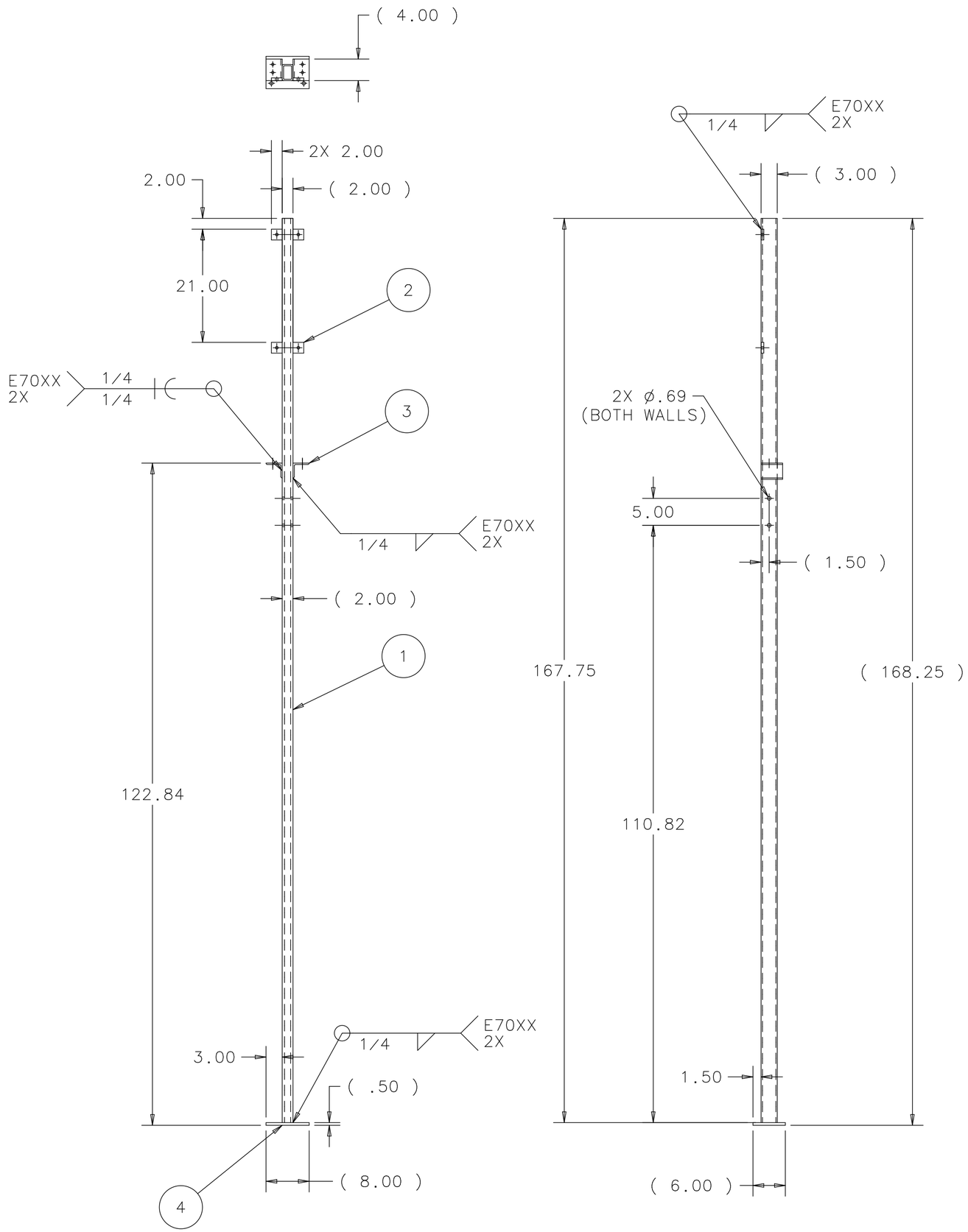

ITEM	PART NO.	DESCRIPTION OR SIZE	QTY.
4	MB-497176	BASE PLATE	1
3	MB-497175	PLATFORM MOUNTING ANGLE	2
2	MB-497174	HAND RAIL MOUNTING TAB	4
1	COML	VERTICAL LEG-STEEL REC. TUBING - 3 X 2 X 1/4 WALL	1

PARTS LIST

UNLESS OTHERWISE SPECIFIED					
.XX	.XXX	ANGLES	ORIGINATOR	J.KILMER	10-OCT-2013
± .03	± ---	± ---	DRAWN	G.SMITH	10-OCT-2013
			CHECKED	G.SMITH	11-OCT-2013
			APPROVED	J.KILMER	11-OCT-2013

1. BREAK ALL SHARP EDGES .015 MAX.
2. DO NOT SCALE DRAWING.
3. DIMENSIONS BASED UPON ASME Y14.5M-1994
4. MAX. ALL MACH. SURFACES 250
5. DRAWING UNITS: U.S. INCH

USED ON: MD-497172

MATERIAL: SEE PARTS LIST ABOVE

FERMI NATIONAL ACCELERATOR LABORATORY
UNITED STATES DEPARTMENT OF ENERGY

MINERVA-MECH-PLANE ANALYSIS HEAVY FRAME WORK PLATFORM VERTICAL LEG WELDMENT

SCALE	DRAWING NUMBER	SHEET	REV
1:16	3938.300-MC-497173	1 OF 1	

CREATED WITH : Ideas12NXSeries | GROUP: PPD/MECHANICAL DEPARTMENT

Created: 06:44:59 on 17-10-13 (D-M-Y) By: gsmith State: 1-INITIAL

REV	DESCRIPTION	DRAWN	DATE
		APPROVED	DATE

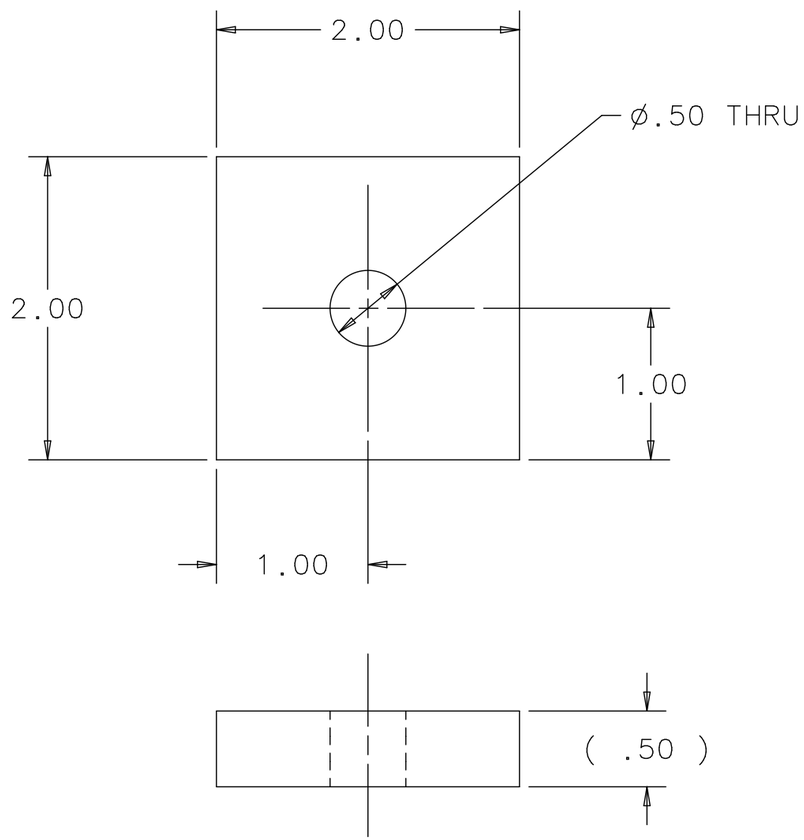

UNLESS OTHERWISE SPECIFIED			ORIGINATOR	J.KILMER	10-OCT-2013
.XX	.XXX	ANGLES	DRAWN	G.SMITH	10-OCT-2013
± .03	± ---	± ---	CHECKED		
			APPROVED		

1. BREAK ALL SHARP EDGES .015 MAX.
2. DO NOT SCALE DRAWING.
3. DIMENSIONS BASED UPON ASME Y14.5M-1994
4. MAX. ALL MACH. SURFACES 125
5. DRAWING UNITS: U.S. INCH

USED ON
MC-497173
MC-497178

MATERIAL
ASTM-A36 STEEL

FERMI NATIONAL ACCELERATOR LABORATORY
UNITED STATES DEPARTMENT OF ENERGY

MINERVA-MECH-PLANE ANALYSIS
HEAVY FRAME WORK PLATFORM
HAND RAIL MOUNTING TAB

SCALE	DRAWING NUMBER	SHEET	REV
1:1	3938.300-MB-497174	1 OF 1	

CREATED WITH : Ideas12NXSeries | GROUP: PPD/MECHANICAL DEPARTMENT

Created: 06:45:16 on 17-10-13 (D-M-Y) By: gsmith State: 1-INITIAL

REV	DESCRIPTION	DRAWN	DATE
		APPROVED	DATE

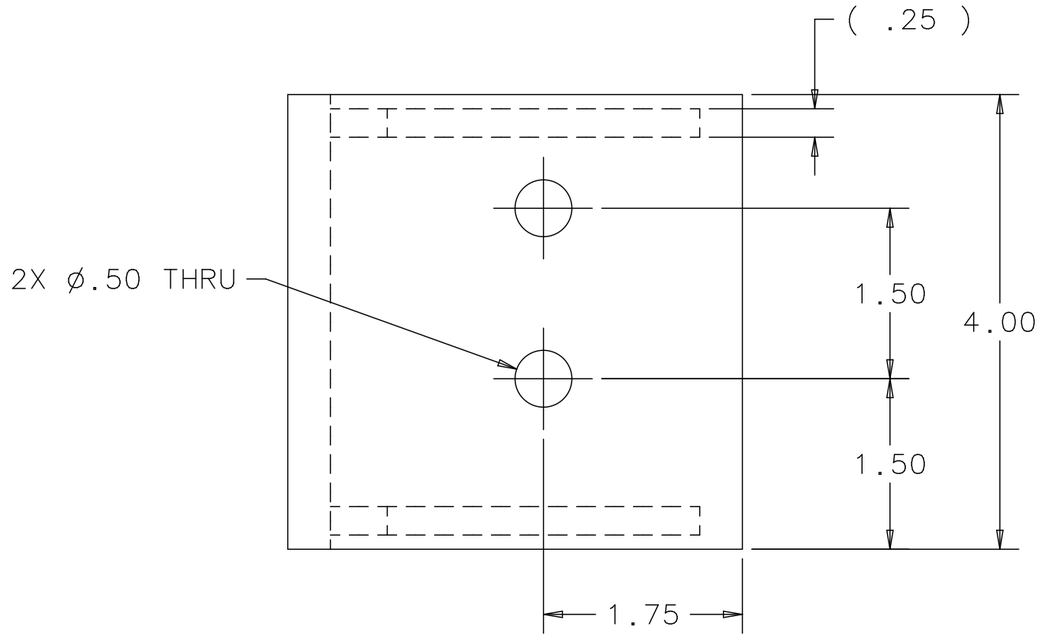

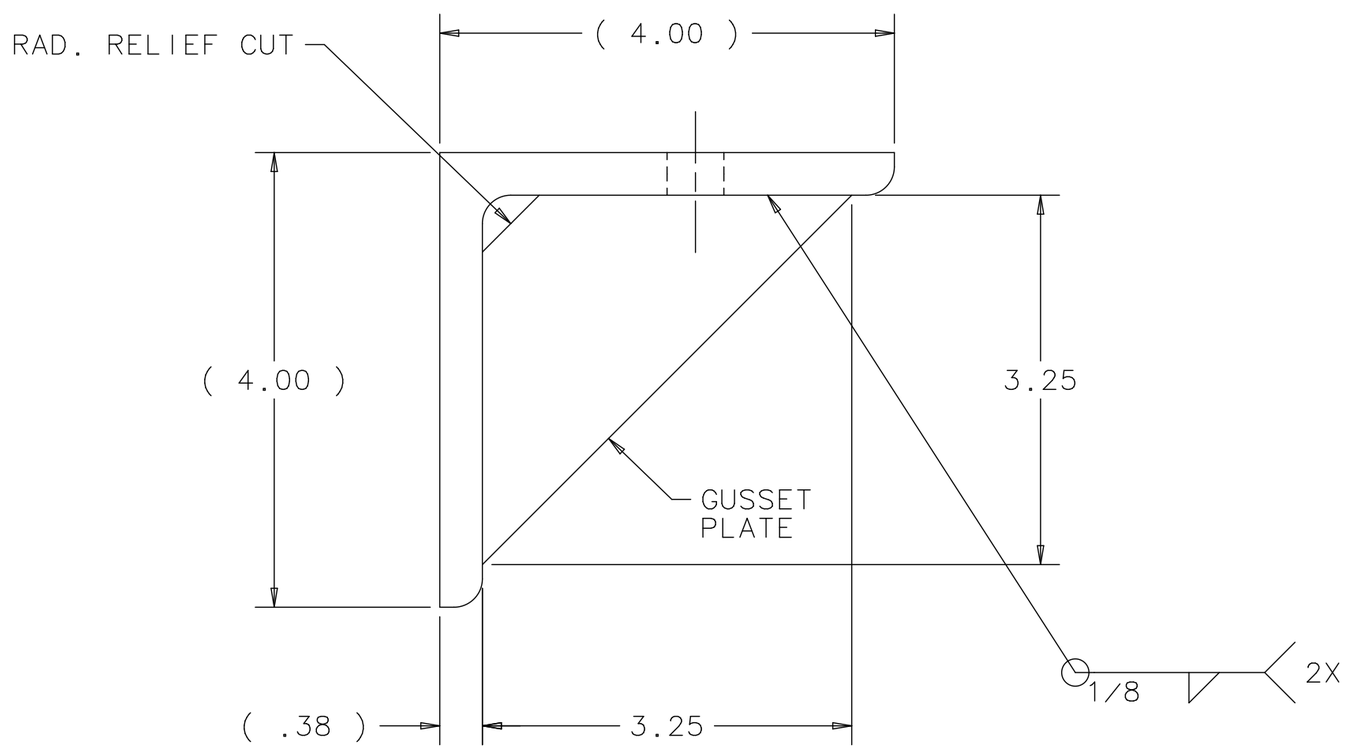

UNLESS OTHERWISE SPECIFIED			ORIGINATOR	J.KILMER	10-OCT-2013
.XX	.XXX	ANGLES	DRAWN	G.SMITH	10-OCT-2013
± .03	± ---	± ---	CHECKED	G.SMITH	11-OCT-2013
			APPROVED	J.KILMER	11-OCT-2013

1. BREAK ALL SHARP EDGES .015 MAX.
2. DO NOT SCALE DRAWING.
3. DIMENSIONS BASED UPON ASME Y14.5M-1994
4. MAX. ALL MACH. SURFACES 125
5. DRAWING UNITS: U.S. INCH

USED ON: MC-497173, MC-497178

MATERIAL: ASTM-A36 STEEL ANGLE

FERMI NATIONAL ACCELERATOR LABORATORY
UNITED STATES DEPARTMENT OF ENERGY

MINERVA-MECH-PLANE ANALYSIS HEAVY FRAME WORK PLATFORM PLATFORM MOUNTING ANGLE

SCALE	DRAWING NUMBER	SHEET	REV
3:4	3938.300-MB-497175	1 OF 1	

CREATED WITH : Ideas12NXSeries | GROUP: PPD/MECHANICAL DEPARTMENT

Created: 06:45:30 on 17-10-13 (D-M-Y) By: gsmith State: 1-INITIAL

REV	DESCRIPTION	DRAWN	DATE
		APPROVED	DATE

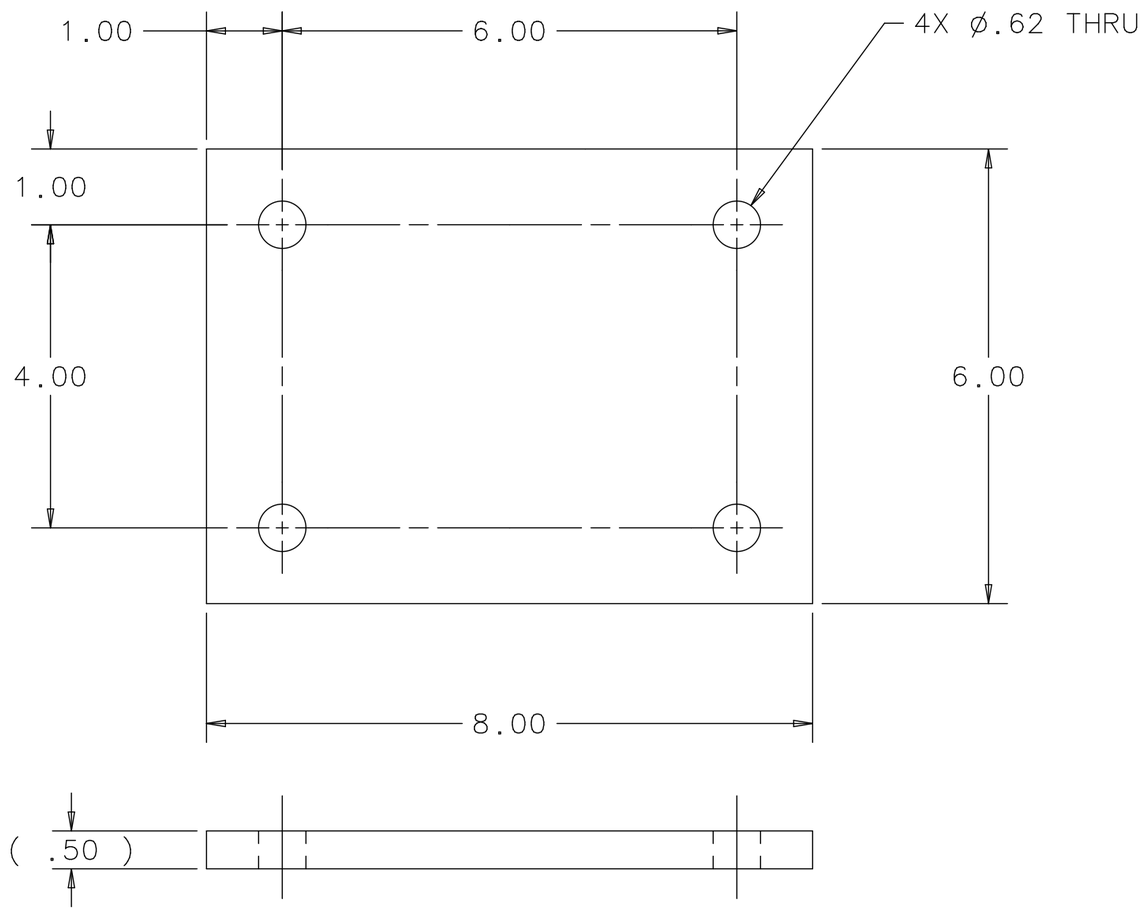

UNLESS OTHERWISE SPECIFIED			ORIGINATOR	J.KILMER	10-OCT-2013
.XX	.XXX	ANGLES	DRAWN	G.SMITH	10-OCT-2013
± .03	± ---	± ---	CHECKED		
			APPROVED		

1. BREAK ALL SHARP EDGES .015 MAX.
2. DO NOT SCALE DRAWING.
3. DIMENSIONS BASED UPON ASME Y14.5M-1994
4. MAX. ALL MACH. SURFACES 125
5. DRAWING UNITS: U.S. INCH

USED ON

MATERIAL
ASTM-A36 STEEL

FERMI NATIONAL ACCELERATOR LABORATORY
UNITED STATES DEPARTMENT OF ENERGY

MINERVA-MECH-PLANE ANALYSIS HEAVY FRAME WORK PLATFORM BASE PLATE

SCALE	DRAWING NUMBER	SHEET	REV
1:2	3938.300-MB-497176	1 OF 1	

CREATED WITH : Ideas12NXSeries | GROUP: PPD/MECHANICAL DEPARTMENT

Created: 06:45:43 on 17-10-13 (D-M-Y) By: gsmith State: 1-INITIAL

REV	DESCRIPTION	DRAWN	DATE
		APPROVED	DATE

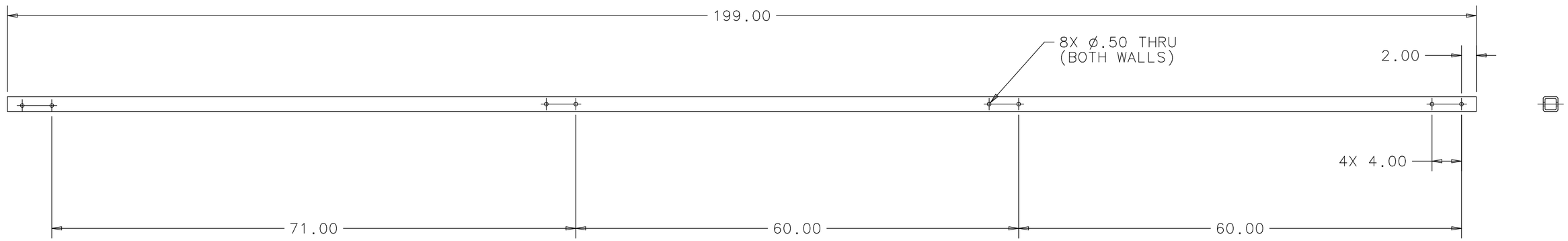

UNLESS OTHERWISE SPECIFIED			ORIGINATOR	J.KILMER	10-OCT-2013
.XX	.XXX	ANGLES	DRAWN	G.SMITH	10-OCT-2013
± .03	± ---	± ---	CHECKED		
			APPROVED		

1. BREAK ALL SHARP EDGES MAX.
2. DO NOT SCALE DRAWING.
3. DIMENSIONS BASED UPON ASME Y14.5M-1994
4. MAX. ALL MACH. SURFACES 125
5. DRAWING UNITS: U.S. INCH

USED ON: MD-497172

MATERIAL: 2 X 2 X 3/16 WALL STEEL TUBING

FERMI NATIONAL ACCELERATOR LABORATORY
UNITED STATES DEPARTMENT OF ENERGY

MINERVA-MECH-PLANE ANALYSIS HEAVY FRAME WORK PLATFORM HAND RAIL

SCALE	DRAWING NUMBER	SHEET	REV
3:64	3938.300-MC-497177	1 OF 1	

CREATED WITH : Ideas12NXSeries | GROUP: PPD/MECHANICAL DEPARTMENT

Created: 06:46:01 on 17-10-13 (D-M-Y) By: gsmith State: 1-INITIAL

REV	DESCRIPTION	DRAWN	DATE
		APPROVED	DATE

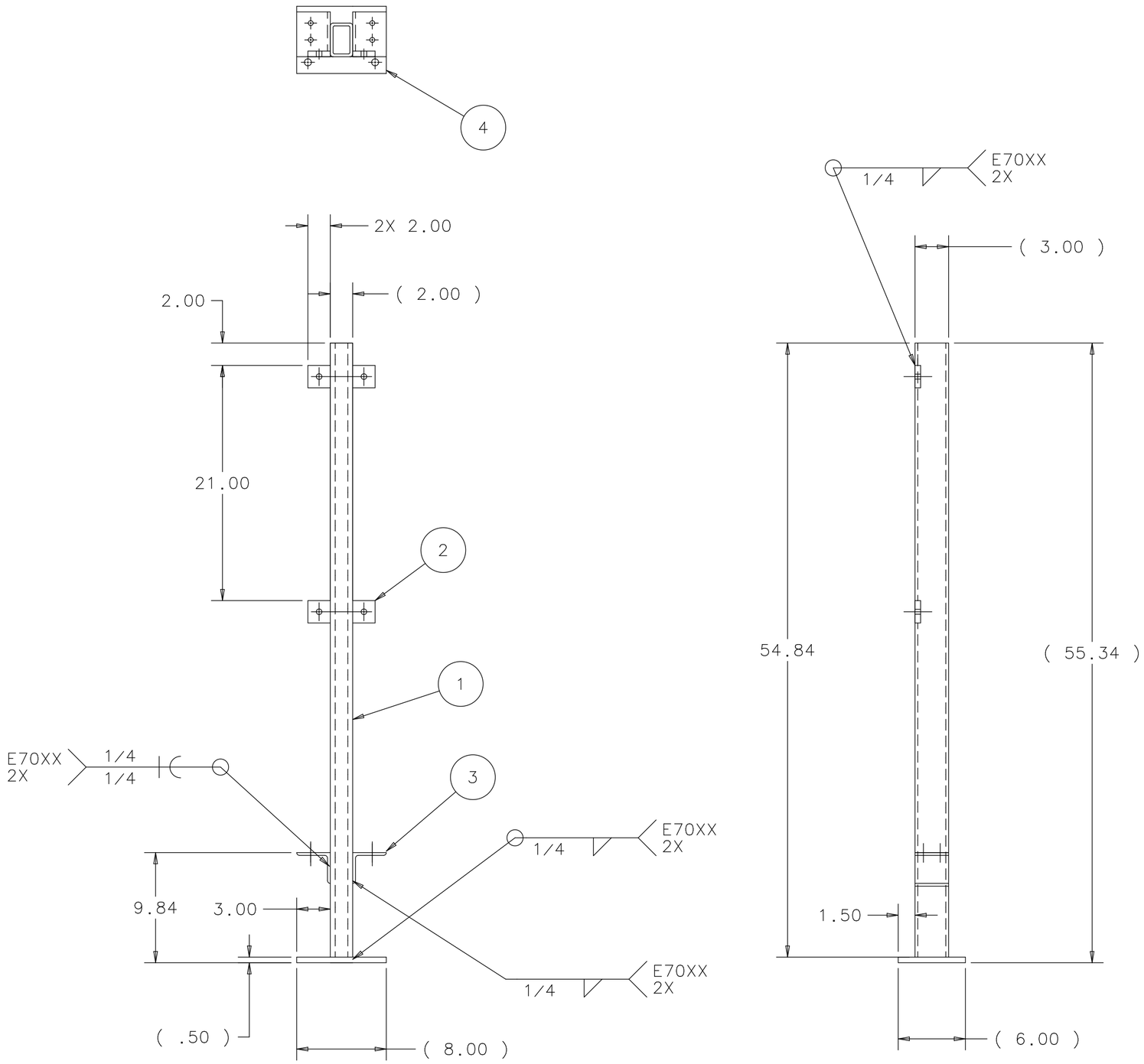

ITEM	PART NO.	DESCRIPTION OR SIZE	QTY.
4	MB-497176	BASE PLATE	1
3	MB-497175	PLATFORM MOUNTING ANGLE	2
2	MB-497174	HAND RAIL MOUNTING BAR	4
1	COML	VERTICAL LEG-STEEL REC. TUBING - 3 X 2 X 1/4 WALL	1

PARTS LIST

UNLESS OTHERWISE SPECIFIED					
.XX	.XXX	ANGLES	ORIGINATOR	J.KILMER	10-OCT-2013
± .03	± ---	± ---	DRAWN	G.SMITH	10-OCT-2013
			CHECKED	G.SMITH	11-OCT-2013
			APPROVED	J.KILMER	11-OCT-2013

1. BREAK ALL SHARP EDGES .015 MAX.
2. DO NOT SCALE DRAWING.
3. DIMENSIONS BASED UPON ASME Y14.5M-1994
4. MAX. ALL MACH. SURFACES 250
5. DRAWING UNITS: U.S. INCH

USED ON: MD-497172

MATERIAL: SEE PARTS LIST ABOVE

FERMI NATIONAL ACCELERATOR LABORATORY
UNITED STATES DEPARTMENT OF ENERGY

MINERVA-MECH-PLANE ANALYSIS HEAVY FRAME WORK PLATFORM VERTICAL LEG WELDMENT

SCALE	DRAWING NUMBER	SHEET	REV
1:8	3938.300-MC-497178	1 OF 1	

CREATED WITH : Ideas12NXSeries | GROUP: PPD/MECHANICAL DEPARTMENT

Created: 06:46:16 on 17-10-13 (D-M-Y) By: gsmith State: 1-INITIAL

REV	DESCRIPTION	DRAWN	DATE
		APPROVED	DATE

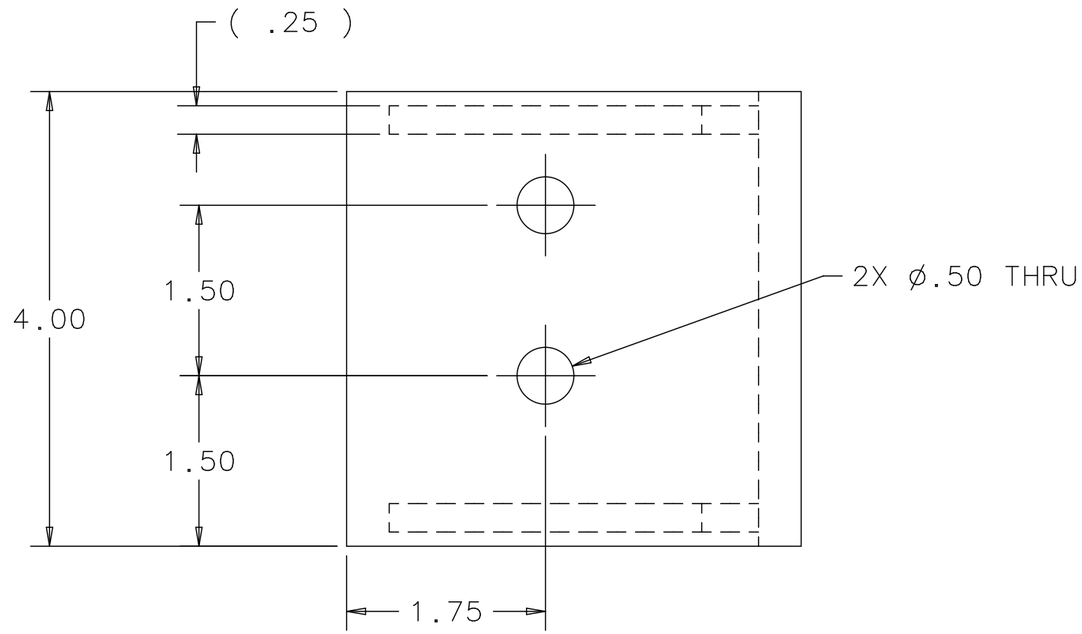

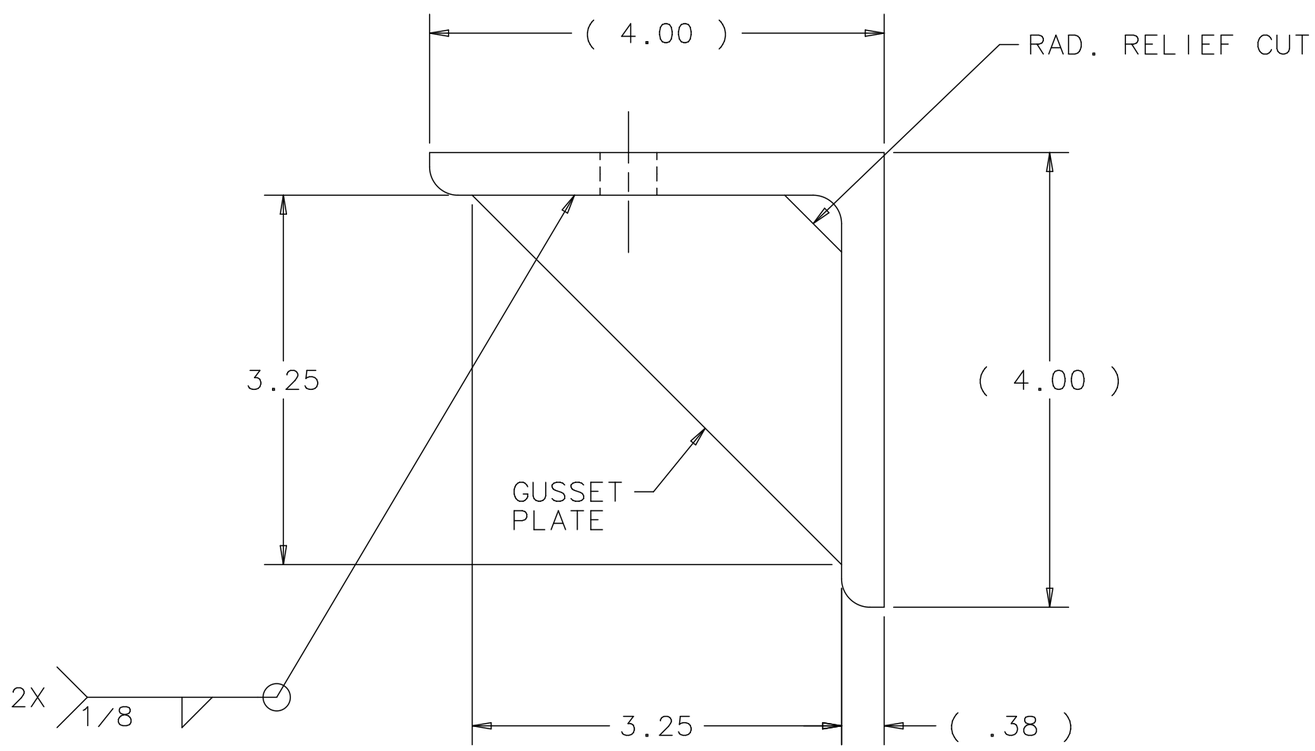

UNLESS OTHERWISE SPECIFIED			ORIGINATOR	J.KILMER	10-OCT-2013
.XX	.XXX	ANGLES	DRAWN	G.SMITH	10-OCT-2013
± .03	± ---	± ---	CHECKED	G.SMITH	11-OCT-2013
			APPROVED	J.KILMER	11-OCT-2013

1. BREAK ALL SHARP EDGES .015 MAX.
2. DO NOT SCALE DRAWING.
3. DIMENSIONS BASED UPON ASME Y14.5M-1994
4. MAX. ALL MACH. SURFACES 125
5. DRAWING UNITS: U.S. INCH

USED ON: MC-497173, MC-497178

MATERIAL: ASTM-A36 STEEL ANGLE

FERMI NATIONAL ACCELERATOR LABORATORY
UNITED STATES DEPARTMENT OF ENERGY

MINERVA-MECH-PLANE ANALYSIS HEAVY FRAME WORK PLATFORM PLATFORM MOUNTING ANGLE L.H.

SCALE	DRAWING NUMBER	SHEET	REV
3:4	3938.300-MB-497179	1 OF 1	

CREATED WITH : Ideas12NXSeries | GROUP: PPD/MECHANICAL DEPARTMENT

Created: 06:46:48 on 17-10-13 (D-M-Y) By: gsmith State: 1-INITIAL

REV	DESCRIPTION	DRAWN	DATE
		APPROVED	DATE

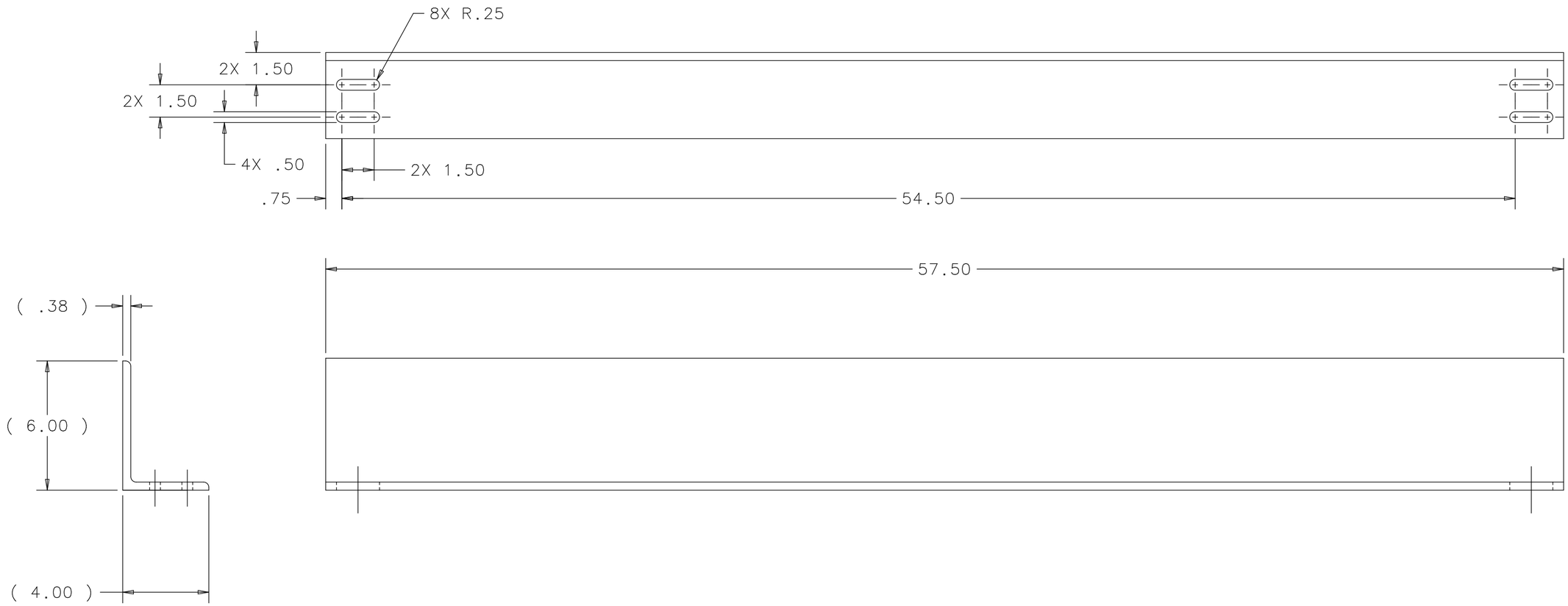

UNLESS OTHERWISE SPECIFIED			ORIGINATOR	J.KILMER	10-OCT-2013
.XX	.XXX	ANGLES	DRAWN	G.SMITH	10-OCT-2013
± .03	± ---	± ---	CHECKED		
			APPROVED		

1. BREAK ALL SHARP EDGES .015 MAX.
2. DO NOT SCALE DRAWING.
3. DIMENSIONS BASED UPON ASME Y14.5M-1994
4. MAX. ALL MACH. SURFACES 250
5. DRAWING UNITS: U.S. INCH

USED ON: MD-497172

MATERIAL: ASTM-A36 STEEL ANGLE

FERMI NATIONAL ACCELERATOR LABORATORY
UNITED STATES DEPARTMENT OF ENERGY

MINERVA-MECH-PLANE ANALYSIS HEAVY FRAME WORK PLATFORM BRACE ANGLE

SCALE	DRAWING NUMBER	SHEET	REV
1:4	3938.300-MC-497188	1 OF 1	

CREATED WITH : Ideas12NXSeries | GROUP: PPD/MECHANICAL DEPARTMENT

Created: 06:47:07 on 17-10-13 (D-M-Y) By: gsmith State: 1-INITIAL

REV	DESCRIPTION	DRAWN	DATE
		APPROVED	DATE

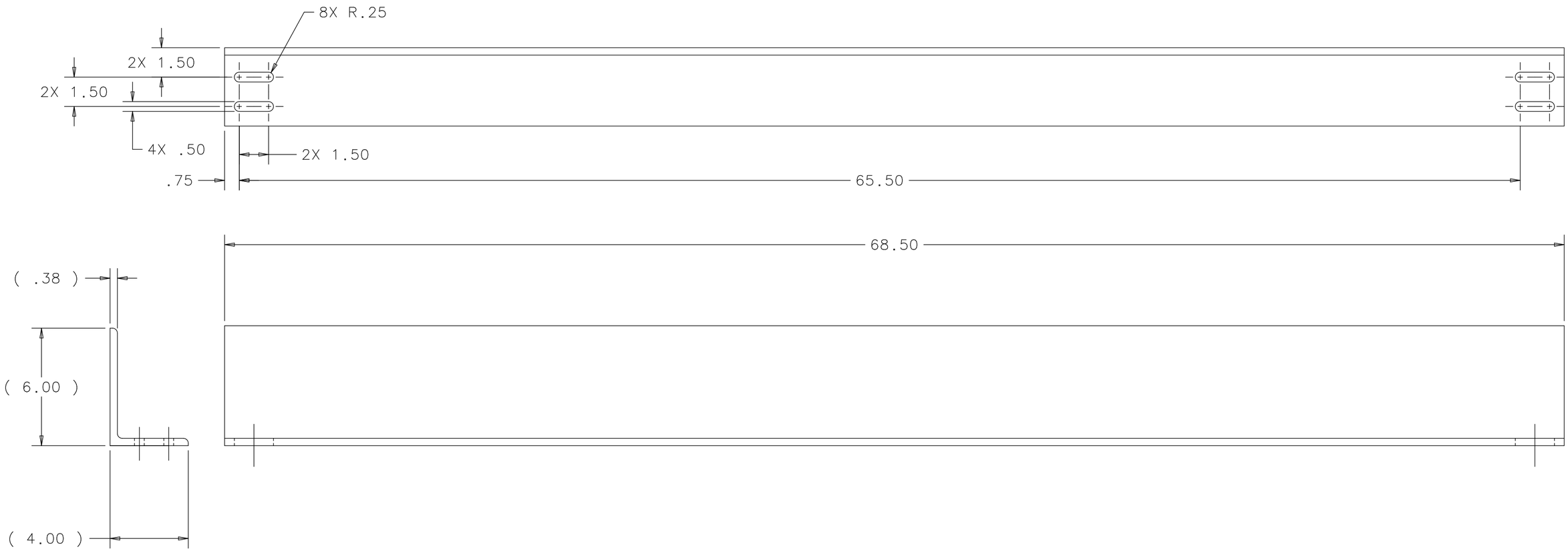

UNLESS OTHERWISE SPECIFIED			ORIGINATOR	J.KILMER	10-OCT-2013
.XX	.XXX	ANGLES	DRAWN	G.SMITH	10-OCT-2013
± .03	± ---	± ---	CHECKED		
			APPROVED		

1. BREAK ALL SHARP EDGES .015 MAX.
2. DO NOT SCALE DRAWING.
3. DIMENSIONS BASED UPON ASME Y14.5M-1994
4. MAX. ALL MACH. SURFACES 250
5. DRAWING UNITS: U.S. INCH

USED ON: MD-497172

MATERIAL: ASTM-A36 STEEL ANGLE

FERMI NATIONAL ACCELERATOR LABORATORY
UNITED STATES DEPARTMENT OF ENERGY

MINERVA-MECH-PLANE ANALYSIS HEAVY FRAME WORK PLATFORM BRACE ANGLE LONG

SCALE	DRAWING NUMBER	SHEET	REV
1:4	3938.300-MC-497189	1 OF 1	

CREATED WITH : Ideas12NXSeries | GROUP: PPD/MECHANICAL DEPARTMENT

Created: 06:47:29 on 17-10-13 (D-M-Y) By: gsmith State: 1-INITIAL

REV	DESCRIPTION	DRAWN	DATE
		APPROVED	DATE

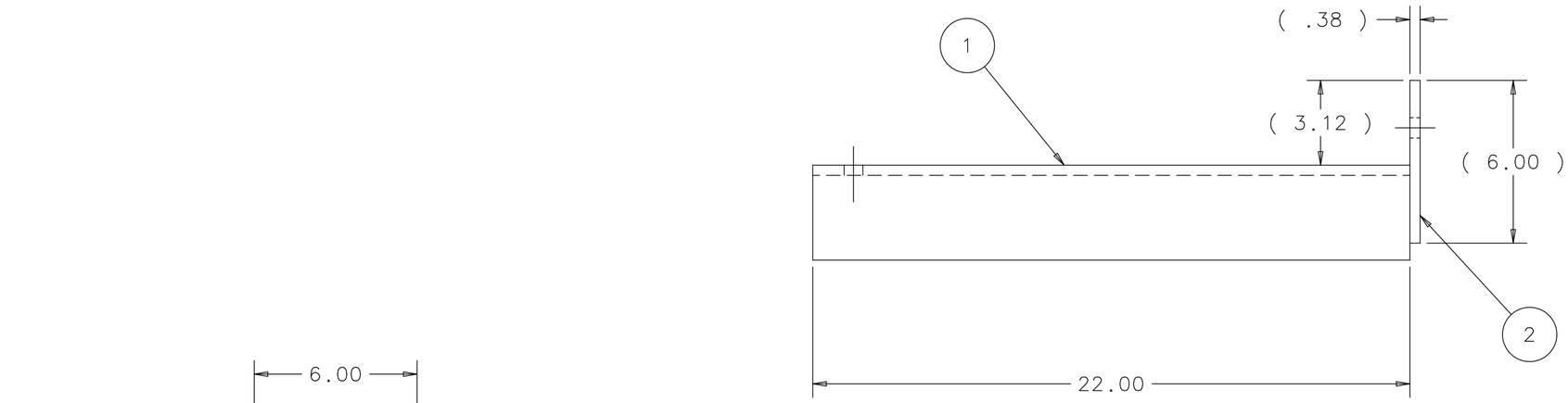

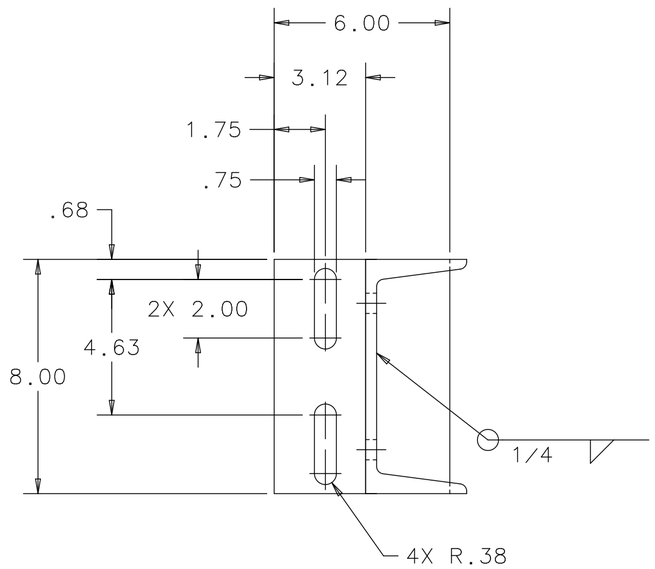

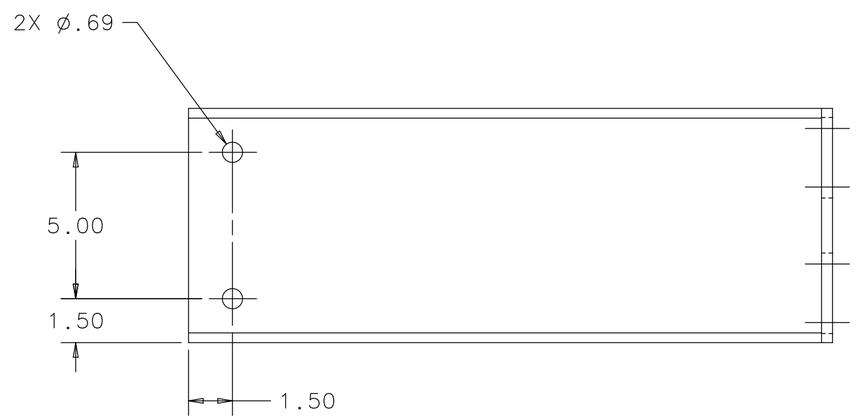

ITEM	PART NO.	DESCRIPTION OR SIZE	QTY.
2		STEEL. PLATE 3/8 X 6.00 X 8.00 LG.	1
1		8" STEEL CHANNEL	1

PARTS LIST

UNLESS OTHERWISE SPECIFIED			ORIGINATOR	J.KILMER	10-OCT-2013
.XX	.XXX	ANGLES	DRAWN	G.SMITH	10-OCT-2013
± .03	± ---	± ---	CHECKED		
			APPROVED		

1. BREAK ALL SHARP EDGES .015 MAX.
2. DO NOT SCALE DRAWING.
3. DIMENSIONS BASED UPON ASME Y14.5M-1994
4. MAX. ALL MACH. SURFACES 250
5. DRAWING UNITS: U.S. INCH

USED ON: MD-497172

MATERIAL: ASTM-A36 STEEL ANGLE

FERMI NATIONAL ACCELERATOR LABORATORY
UNITED STATES DEPARTMENT OF ENERGY

MINERVA-MECH-PLANE ANALYSIS HEAVY FRAME WORK PLATFORM CHANNEL MOUNT

SCALE	DRAWING NUMBER	SHEET	REV
1:4	3938.300-MC-497190	1 OF 1	

CREATED WITH : Ideas12NXSeries | GROUP: PPD/MECHANICAL DEPARTMENT