LIFTING DEVICE

DEVICE NAME: BATTERY LIFTING BAR, T5B LOCOMOTIVE

ENGINEERING NOTE NUMBER: 55

DRAWING NUMBER: 7210.300-ME-285741

APPLICABLE STANDARD: ALUM. STRUCTURES, SECT 1, FIFTH ED. 1986
& BELOW THE HOOK LIFTING DEVICES
~~ANSI/ASME B30.20-1985~~

RATED LOAD: 2000#

TEST LOAD: 11250

TEST LOAD PERCENT: 125%

LAST LOAD TEST DATE: 12/29/92

COLOR: ALUM.

STRESS CALCULATIONS:

Done by: E.M. Villyard

Date: 11/13/92

Reviewed by:

Date:

REMARKS:

IDENTIFICATION:

Engineering Note Number & Rated Load Must be Clearly Marked On a Conspicuous Surface.

FERMILAB ENGINEERING NOTE	SECTION	PROJECT ENG'G. NOTES	SERIAL-CATEGORY	PAGE 1
SUBJECT BATTERY LIFTING BAR TSB LOCOMOTIVE RD / MECH DEPT		NAME E.M. Villegas		
		DATE 6/10/92	REVISION DATE	

MEASURED DIMS.

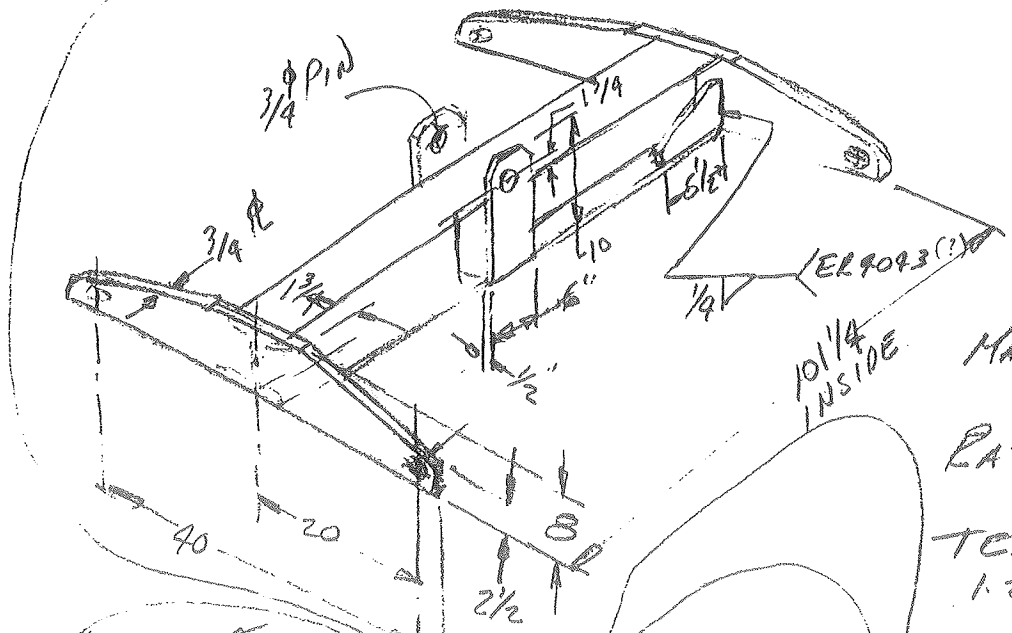

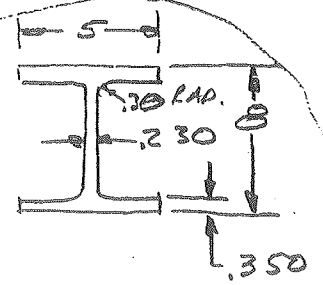

$I_x = 59.7 \text{ in}^4$

$r = 3.37$

$A = 5.972$

MAT'L: ALUM. 6061-T6

RATED LOAD 9000#

TEST LOAD 1.25 × 9000 = 11,250#

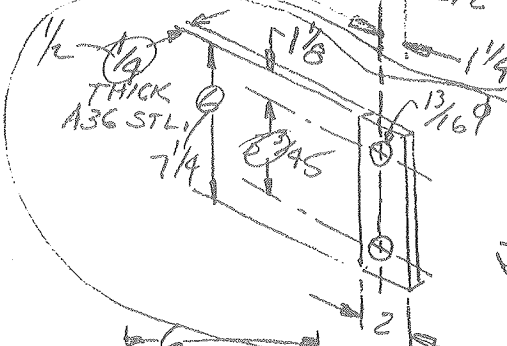

$F_x = \frac{36 \times 10^3}{3} = 12 \times 10^3$ ALLOWED

$f_x = \frac{11250}{3\left[\frac{(2 - 8/12)}{2} \times 2.5\right]} = 25.2 \times 10^3 > F_x$

DO NOT USE

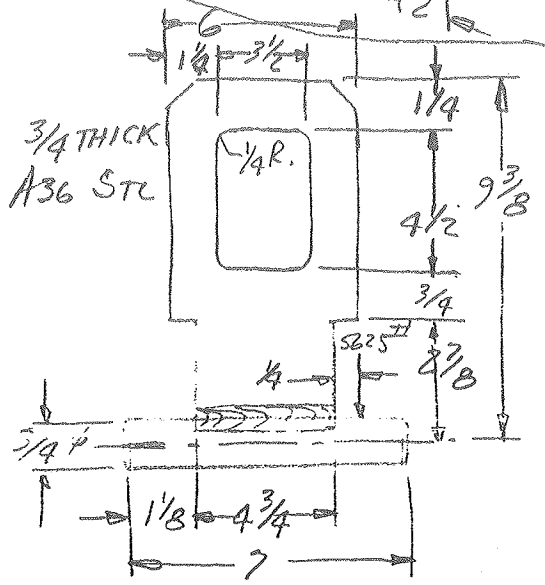

$I_{3/4\phi} = \frac{\pi .75^4}{64} = .015$

$f_b = \frac{.250 \times 5625^{\#} \times .375}{.015} = 35.2 \times 10^3 > F_b$

$f_v = \frac{5625}{\left(\frac{\pi .75^2}{4}\right)} = 12.7 \times 10^3 > F_v$

DO NOT USE

5625 5625

$M = \frac{5625 \times 101.25}{2} = 285 \times 10^3$ IN-LB

$F_b = \frac{35 \times 10^3}{3} = 11.7 \times 10^3$ ALLOWED

$F_v = \frac{20 \times 10^3}{3} = 6.7 \times 10^3$ ALLOWED

$f_b = \frac{Mc}{I} = 19.1 \times 10^3 > F_b$ NOT GOOD

$f_v = \frac{11250}{2 \times 8 \times .23} = 3.1 \times 10^3 < F_v$ OK

$y = \frac{Wl^3}{48EI} = .403$ @ TEST LOAD

$= .323$ @ RATED LOAD

BEAM NEEDS TO BE STRENGTHEN TO COMPLY

FERMILAB ENGINEERING NOTE	SECTION MSG	PROJECT ENG'G NOTES	SERIAL-CATEGORY	PAGE 2
SUBJECT BATTERY LIFTING BAR TSB LOCOMOTIVE MECH SYSTEMS GROUP			NAME E. Willey	
			DATE 11/2/92	REVISION DATE

NOTE:

ALL DATA SHOWN BELOW, UNLESS OTHERWISE NOTED, WAS TAKEN FROM THE ALUMINUM ASSOC. SPECIFICATIONS FOR ALUM. STRUCTURES, SECTION 1, FIFTH EDITION, DEC. 1986 (Pgs 18, 19 & 63)

ALUM. 6061-T6 (EXTRUSION)

$E = 10.1 \times 10^6$ psi

$F_{cy} = F_{ty} = 35 \times 10^3$ psi $\rightarrow F_{tu} = 38 \times 10^3$ psi

$F_{vy} = 20 \times 10^3$ psi

$K_t = 1.0$ COEFFICIENT FOR NON-WELDED OR REGIONS FARTHER THAN & WITHIN 1.0" OF A WELD. (IN EFFECT ALL OVER STRUCTURE.)

$n = 3$ SAFETY FACTOR PER 'BELOW THE HOOK LIFTING DEVICES' ANSI/ASME B30.20-1985

CHECK FOR TOP & BOTTOM FLANGE STRESS

TOP $\rightarrow$ $F_t = \frac{F_{ty}}{n}$ or $F_t = \frac{F_{tu}}{K_t n}$ (USE SMALLER VALUE)

$= \frac{35 \times 10^3}{3} = 11.7 \times 10^3$ psi ALLOWED

BOTTOM $\rightarrow$ $B_c = F_{cy}\left[1 + \left(\frac{F_{cy}}{2250}\right)^{1/2}\right] = 173 \times 10^3$

$D_c = \frac{B_c}{10}\left(\frac{B_c}{E}\right)^{1/2} = 2.3 \times 10^3$

$C_c = .41\left(\frac{B_c}{D_c}\right) = 81$

$\frac{L_b}{r} = 12.5 \longrightarrow$ where $L_b = 42\frac{1}{8}$, $r = 3.37$

$S_1 = \frac{1.2(B_c - F_{cy})}{D_c} = 72$ & $S_2 = 1.2 C_c = 37.2$

SINCE $\frac{L_b}{r} < S_1$,

USE $F_a = \frac{F_{cy}}{n} = 11.7 \times 10^3$ psi ALLOWED

FROM FEA, Pg #4, MAX. STRESS $f_{vm} = 11.4 \times 10^3$ DESIGN

FERMILAB ENGINEERING NOTE	SECTION MSG	PROJECT ENG'G NOTES	SERIAL-CATEGORY	PAGE 3
SUBJECT BATTERY LIFTING BAR TSB LOCOMOTIVE MECH SYSTEMS GROUP		NAME E M Villegas		
		DATE 11/2/92	REVISION DATE	

CHECK FOR WEB SHEAR

$$B_v = F_{vy}\left[1 + \frac{(F_{vy})^{1/3}}{9.3}\right] = 78.3 \times 10^3$$

$$D_v = \frac{B_v}{10}\left(\frac{B_v}{E}\right)^{1/2} = 693.8$$

$$C_v = .41\left(\frac{B_v}{D_v}\right) = 46.3$$

$$\frac{h}{t} = 6.5 \longrightarrow \text{where } h = 8'' \;\&\; t = 1.23''$$

$$S_1 = \frac{B_v - F_{vy}}{1.25 D_v} = 67.3 \;\&\; S_2 = \frac{C_v}{1.25} = 37.1$$

SINCE $\frac{h}{t} < S_1$

USE $F_v = \frac{F_{vy}}{n} = 6.7 \times 10^3$ psi ALLOWED

FROM FEA, Pg #5, MAX. SHEAR STRESS $f_v = 6.1 \times 10^3$ DESIGN

CHECK WELD ALONG STIFFNERS

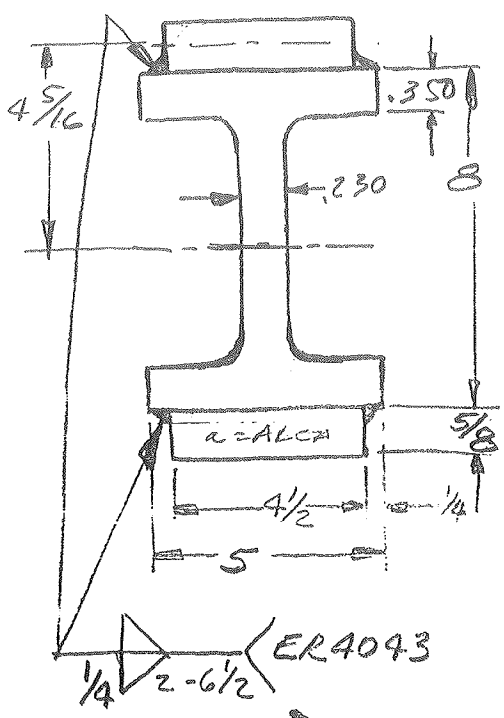

$F_{vw} = \sin 45° F_v$ where $F_v = \frac{11.5 \times 10^3}{n}$ → see Pg 2

$= 2.7 \times 10^3$ #/IN ALLOWED FOR ER4043 SEE NOTE, Pg 2

$= 3.83 \times 10^3$ psi

$f_{vw} = \frac{V a y}{I n_w}$ where $V = \frac{11250}{2}$

$= 5625$ #

$= 207.4$ #/IN DESIGN

$a = 2.812$ in²

$w = \frac{f_{vw}}{F_{vw}} = .077''$ FILLET

$y = 4.3125$

$\% = \frac{.077 \times 100}{.250} = 30.7$

$I_w = 164.5$

$n_w = 2$ WELDS

$\text{℄ DIST.} = \frac{100\, l_w}{\%}$

$= 6.5''$

w = CONT. FILLET LEG SIZE

% = % INTERMITTENT WELDS

l = 2" LENGTH

SDRC I-DEAS VI: FE_Modeling_&_Analysis

23-NOV-92 13:46:16

Units : IN

Database: battery lftg bar

View : No stored View

Task: Post Processing

Model: 1-MODIFIED MDL

Display : No stored Option

Model Bin: 1-MAIN

Associated Workset: 1-WORKING_SET1

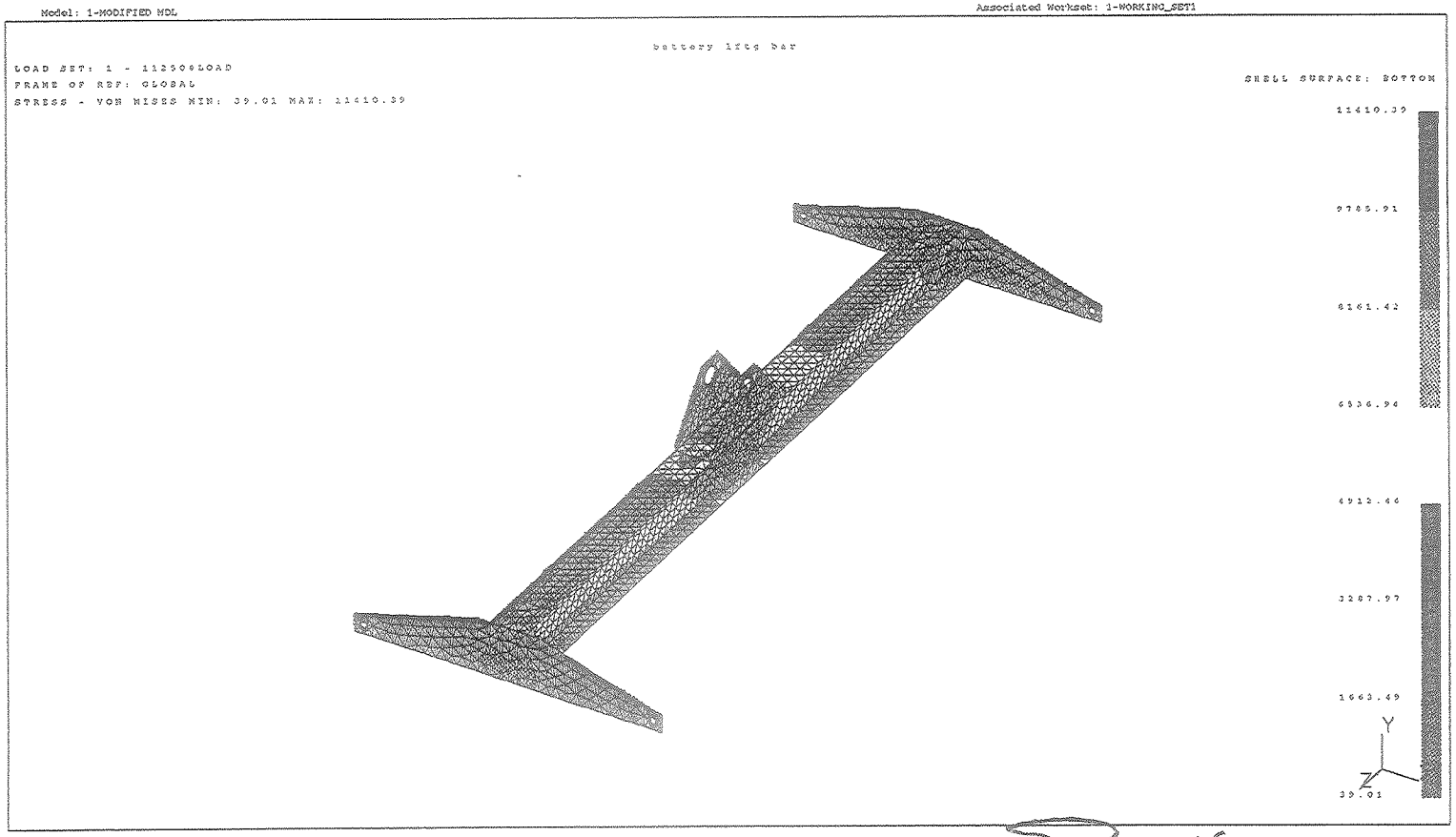

Pg #4

SDRC I-DEAS VI: FE_Modeling_&_Analysis

23-NOV-92 13:48:58

Units : IN

Database: battery lifg bar

View : No stored View

Task: Post Processing

Model: 1-MODIFIED MDL

Display : No stored Option

Model Bin: 1-MAIN

Associated Workset: 1-WORKING_SET1

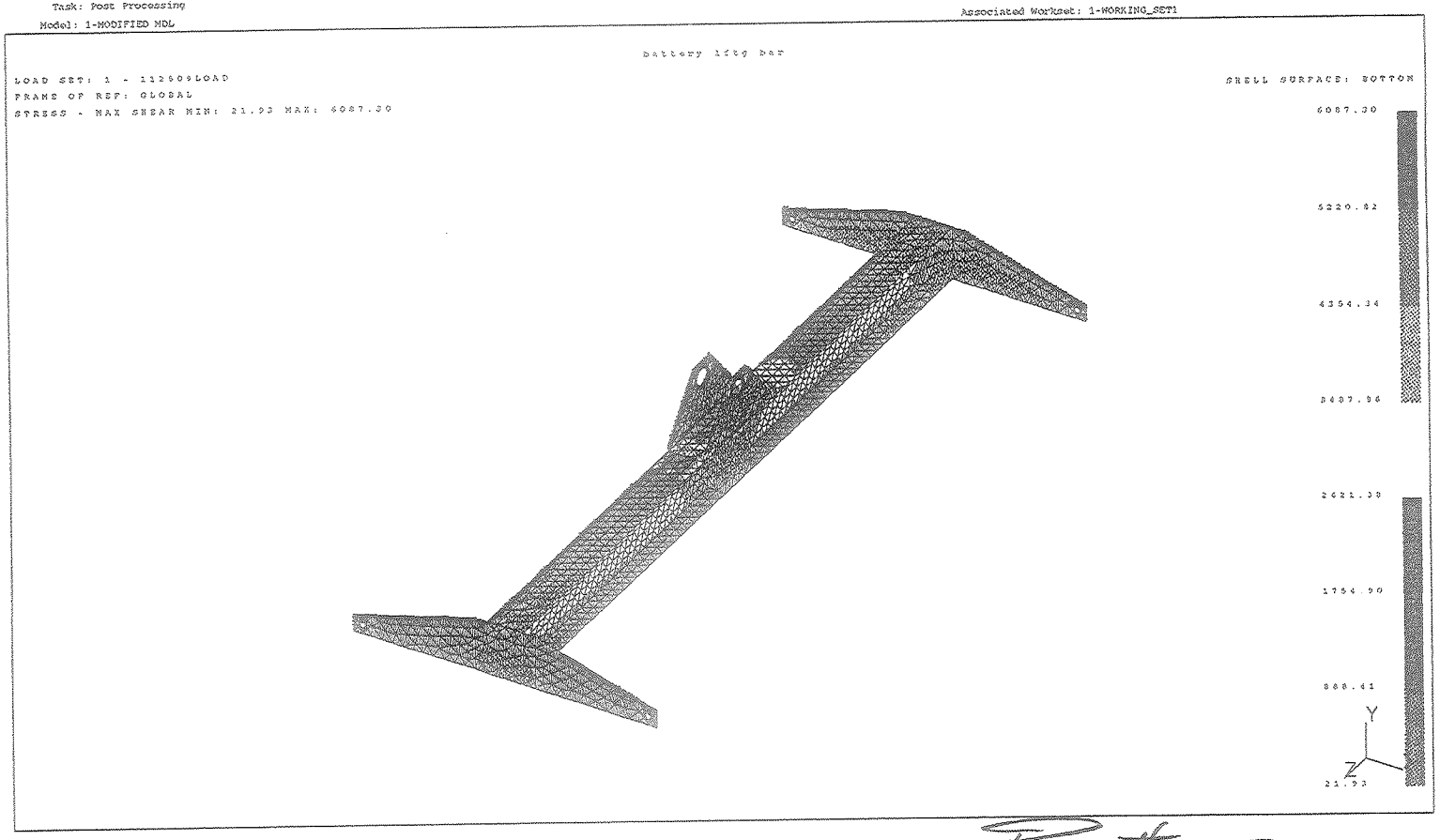

Pg #5

FERMILAB

ENGINEERING NOTE

SECTION	PROJECT	SERIAL-CATEGORY	PAGE
MSG	ENG'G NOTES		6

SUBJECT: BATTERY LIFTING BAR, PICK POINT MOD. TSB LOCOMOTIVE RD / MSG

NAME: E M Villegas

DATE: 11/19/92

REVISION DATE:

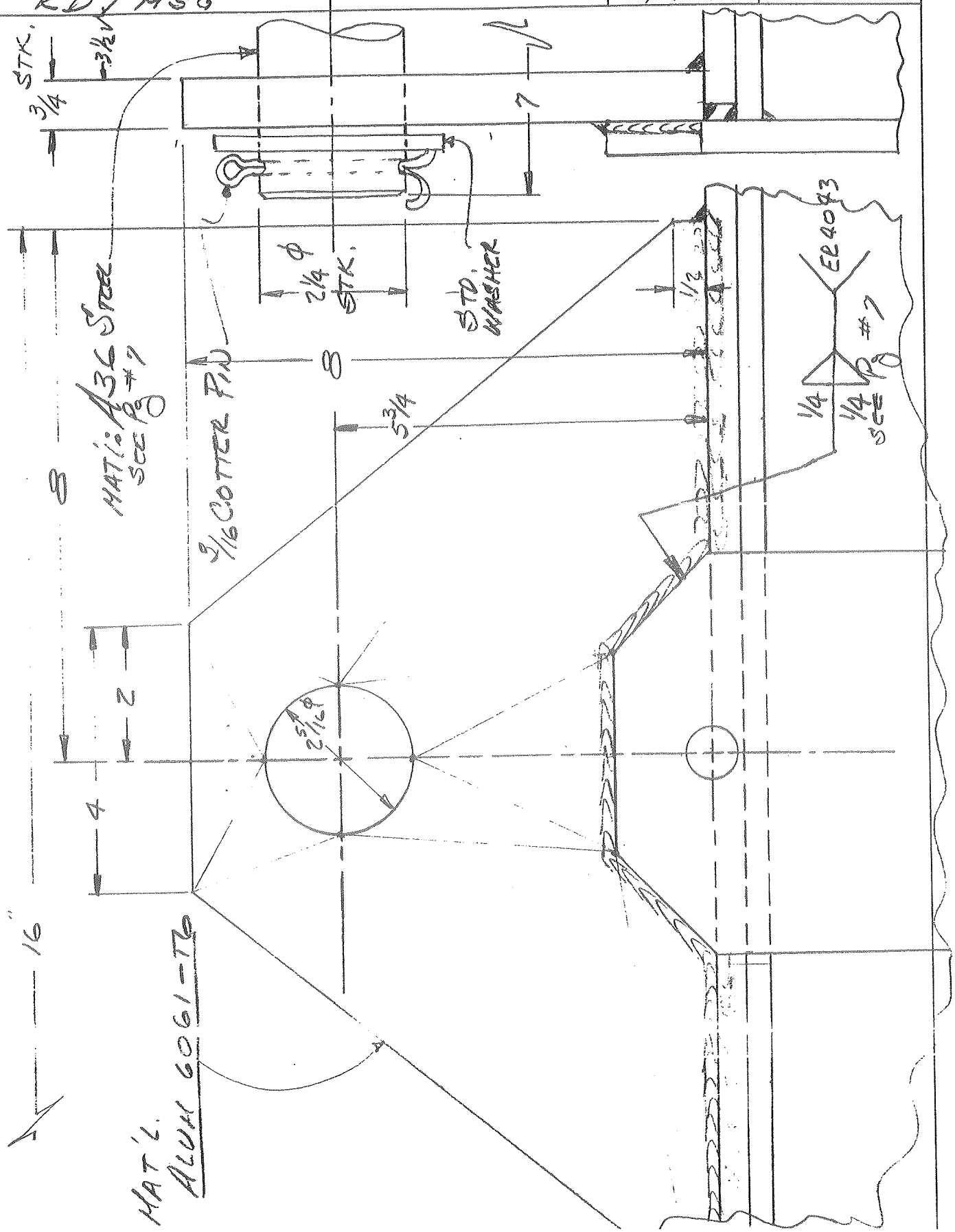

FERMILAB ENGINEERING NOTE	SECTION	PROJECT ENG'G NOTES	SERIAL-CATEGORY	PAGE 7
SUBJECT BATTERY LIFTING BAR, PICK-UP PIN TSB LOCOMOTIVE RD/MSG		NAME Erik Villegas	DATE 11/19/92	REVISION DATE

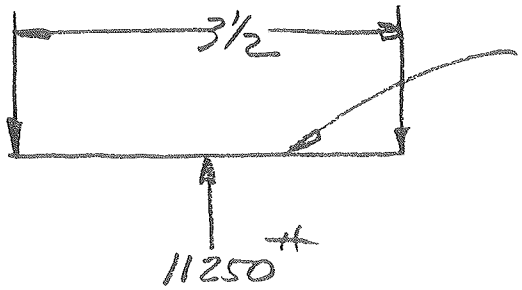

2¼ ϕ PIN

MAT'L. A36 STEEL

$F_b = \frac{36 \times 10^3}{3}$

$= 12 \times 10^3$ psi ALLOWED

$M = \frac{11250 \times 1.25}{2}$

$= 7844$ IN-LB

$f_b = \frac{Mc}{I}$

$= 8.8 \times 10^3$ psi $< F_b$

CHECK WELD FOR PICK-UP POINT MOD.

FROM Pg #3, $F_{vw} = 2.7 \times 10^3$ #/IN ALLOWED.

FROM Pg #6, TOTAL LENGTH OF WELD = 57"

$\therefore f_{vw} = \frac{11250}{57} = 197.4$ #/IN

$\therefore w = \frac{f_{vw}}{F_{vw}}$

$= .073$" FILLET REQ'D FOR LOAD

BUT $w = .250$" MINIMUM FILLET REQ'D. FOR SUFFICIENT HEAT INPUT TO GIVE THE DESIRED RATE OF COOLING.

SDRC I-DEAS VI: FE_Modeling_&_Analysis

24-NOV-92 10:21:13

Database: battery lftg bar
View : No stored View
Task: Post Processing
Model: 2-ADAPTER PLATES

Units : IN
Display : No stored Option
Model Bin: 1-MAIN
Associated Workset: 2-WORKING_SET2

LOAD SET: 1 - ONE THIRD LOAD
FRAME OF REF: GLOBAL
STRESS - VON MISES MIN: 161.24 MAX: 11126.72

A36 STEEL
1/2 THICK

$F_b = F_t = \frac{36 \times 10^3}{3}$

$= 12 \times 10^3$

$f_{vm} = 11.1 \times 10^3 < F_b$

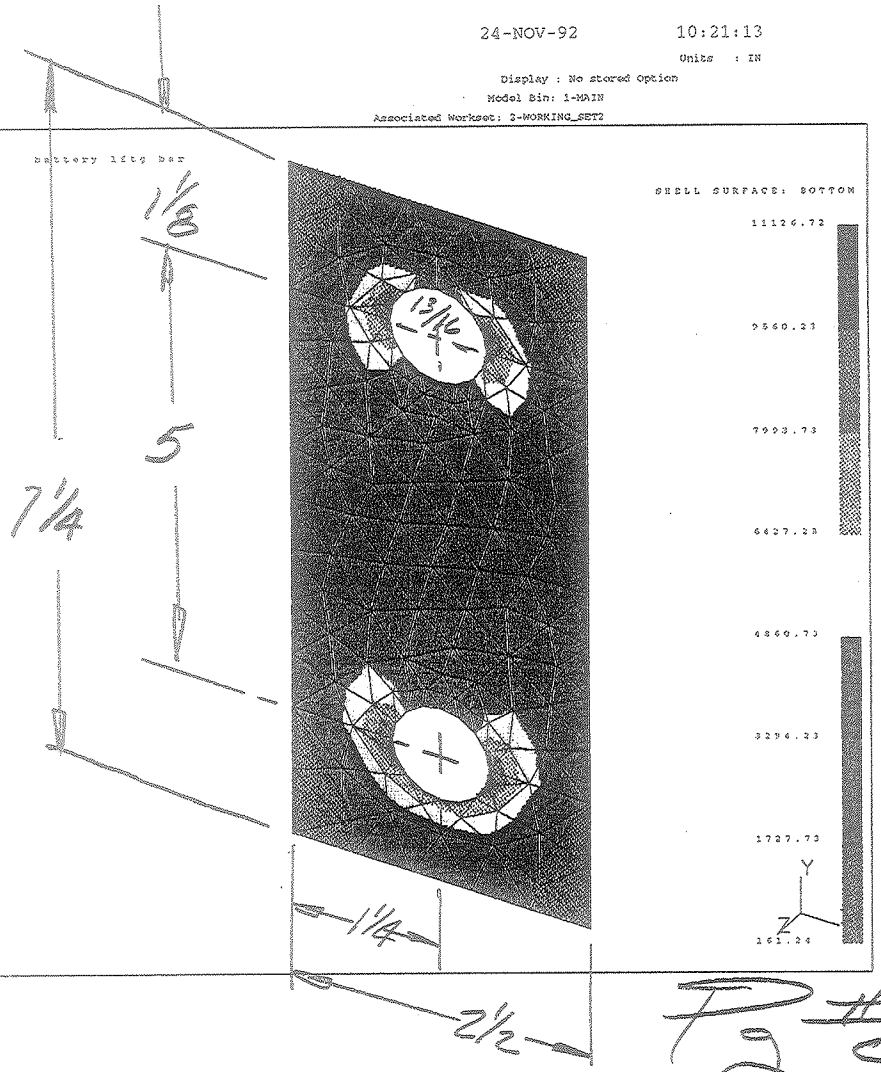

Pg #8

SDRC I-DEAS VI: FE_Modeling_&_Analysis

24-NOV-92 10:22:50

Units : IN

Database: battery lftg bar

View : No stored View

Task: Post Processing

Model: 2-ADAPTER PLATES

Display : No stored Option

Model Bin: 1-MAIN

Associated Workset: 2-WORKING_SET2

battery lftg bar

LOAD SET: 1 - ONE THIRD LOAD

FRAME OF REF: GLOBAL

STRESS - MAX SHEAR MIN: 87.36 MAX: 5694.50

$f_v = 5.7 \times 10^3 < F_v$

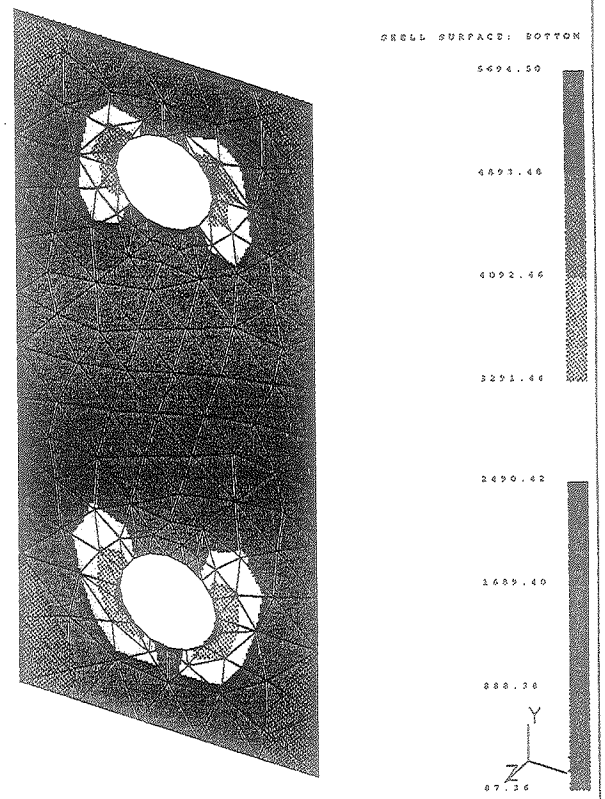

Pg #9

FERMILAB ENGINEERING NOTE	SECTION	PROJECT	SERIAL-CATEGORY	PAGE
	MSG	ENG'G NOTES		

SUBJECT: BATTERY LIFT'G BAR, REDESIGNED YOKE
TSB LOCOMOTIVE
RD / MSG

NAME: E M Villegas

DATE: 11/16/92

REVISION DATE:

MAT'L. A36 STEEL

$F_v = F_b = \frac{36 \times 10^3}{3} = 12 \times 10^3$ psi ALLOWED

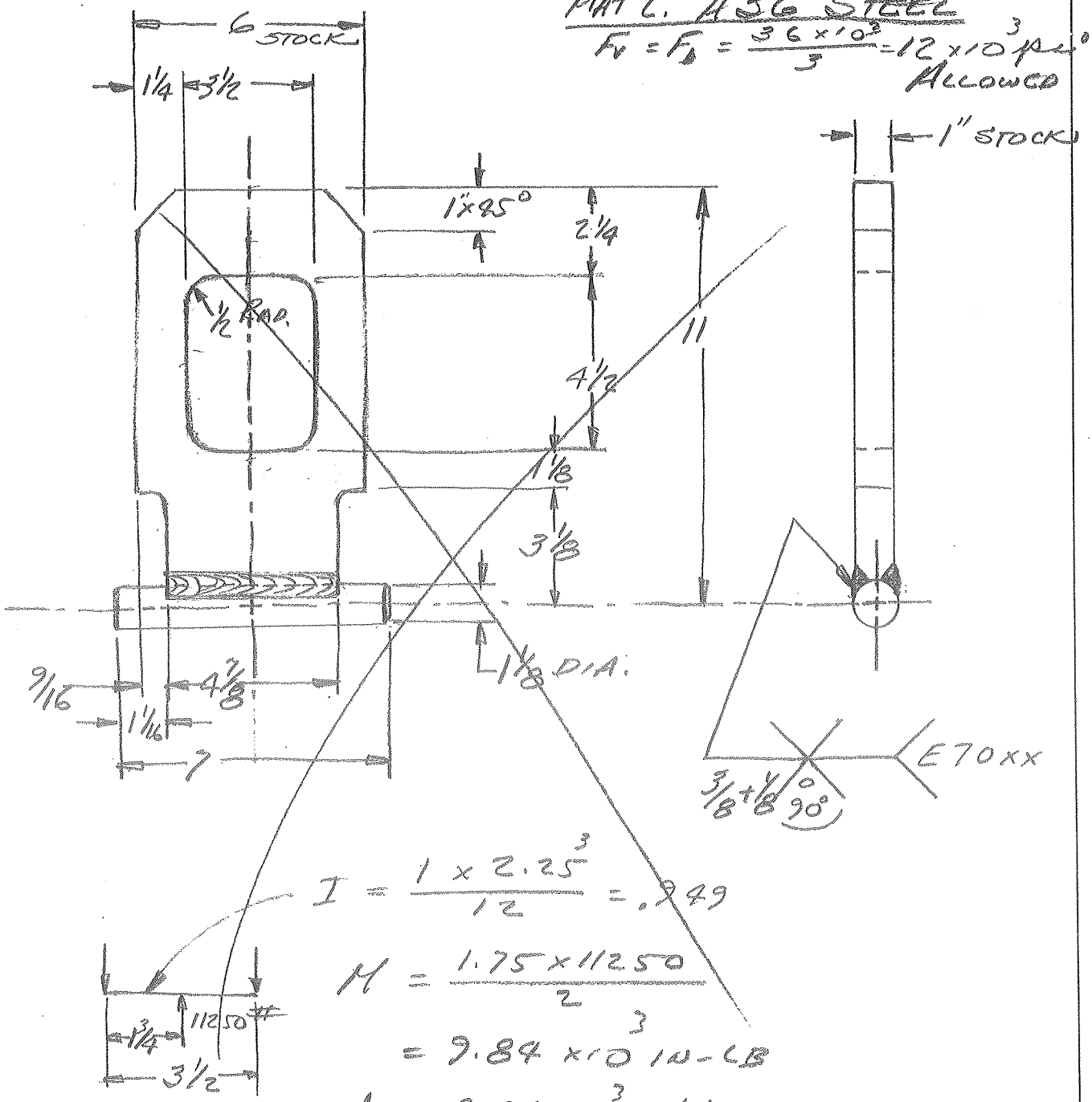

$$I = \frac{1 \times 2.25^3}{12} = .949$$

$$M = \frac{1.75 \times 11250}{2}$$

$$= 9.84 \times 10^3 \text{ IN-LB}$$

$$f_b = \frac{9.84 \times 10^3 \times 1.125}{.949}$$

$$= 11.7 \times 10^3 \text{ psi} < F_b$$

$$f_v = \frac{11250}{2 \times 1 \times 2.25}$$

$$= 2.5 \times 10^3 \text{ psi} < F_v$$

FERMILAB ENGINEERING NOTE	SECTION	PROJECT	SERIAL-CATEGORY	PAGE
	MSG	ENG'G NOTES		

SUBJECT: BATTERY LIFTING BAR YOKE
TSB LOCOMOTIVE
RD/MECH. SYSTEMS GROUP

NAME: E.M. Villegas
DATE: 11/16/92
REVISION DATE:

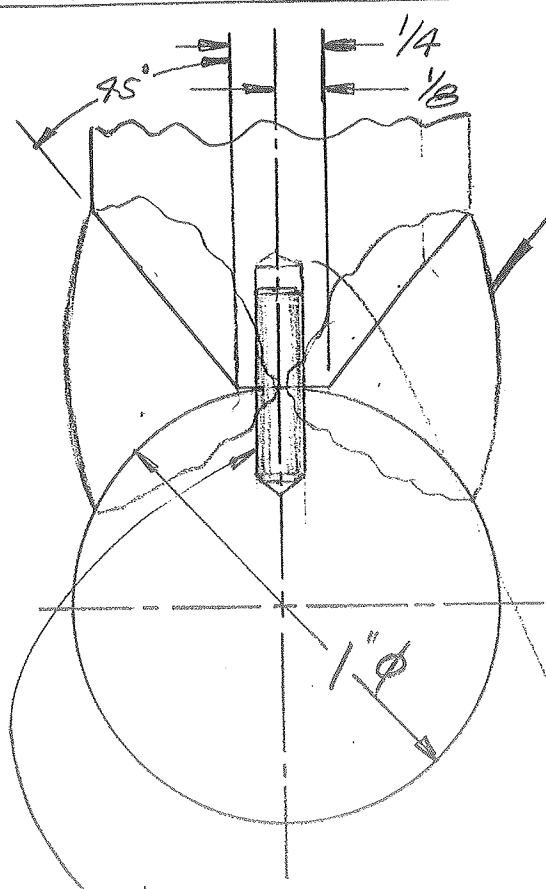

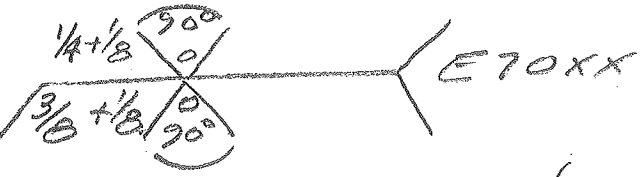

MAT'L: PLATE & RD.
A36 STEEL
WELD METAL: E70XX

$t_e = \sqrt{\frac{t_p}{6}}$ — $t_p = 1''$ THICKNESS THINNER MEMBER

$= .408$ EFFECTIVE THROAT BASED ON t_p

$F_{vw} = \frac{(\sin 45°)\,60 \times 10^3}{3}$

$= 14.1 \times 10^3$ #/IN (E70XX)

$f_{vw} = \frac{11250}{2 \times 4.875}$

$= 1154$ #/IN

$t_e = \frac{f_{vw}}{F_{vw}}$

$= .082$ THROAT DEPTH REQ'D BASE ON STRESS.

1/8 φ × 1/2 LG.
LOCATING PIN

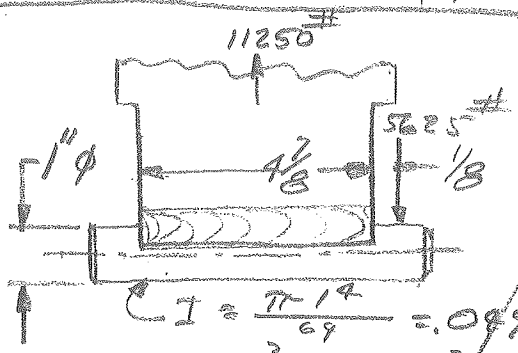

$I = \frac{\pi\, 1^4}{64} = .049$

$F_v = F_b = \frac{36 \times 10^3}{3} = 12 \times 10^3$ psi ALLOWED

$f_b = \frac{.125 \times 5625 \times .5625}{.049}$

$= 8.1 \times 10^3 < F_b$

$f_v = \frac{5625}{\left(\frac{\pi\, 1.0^2}{4}\right)}$

$= 7.2 \times 10^3 < F_v$

FERMILAB
ENGINEERING NOTE

SECTION	PROJECT	SERIAL-CATEGORY	PAGE

SUBJECT

NAME

DATE | REVISION DATE

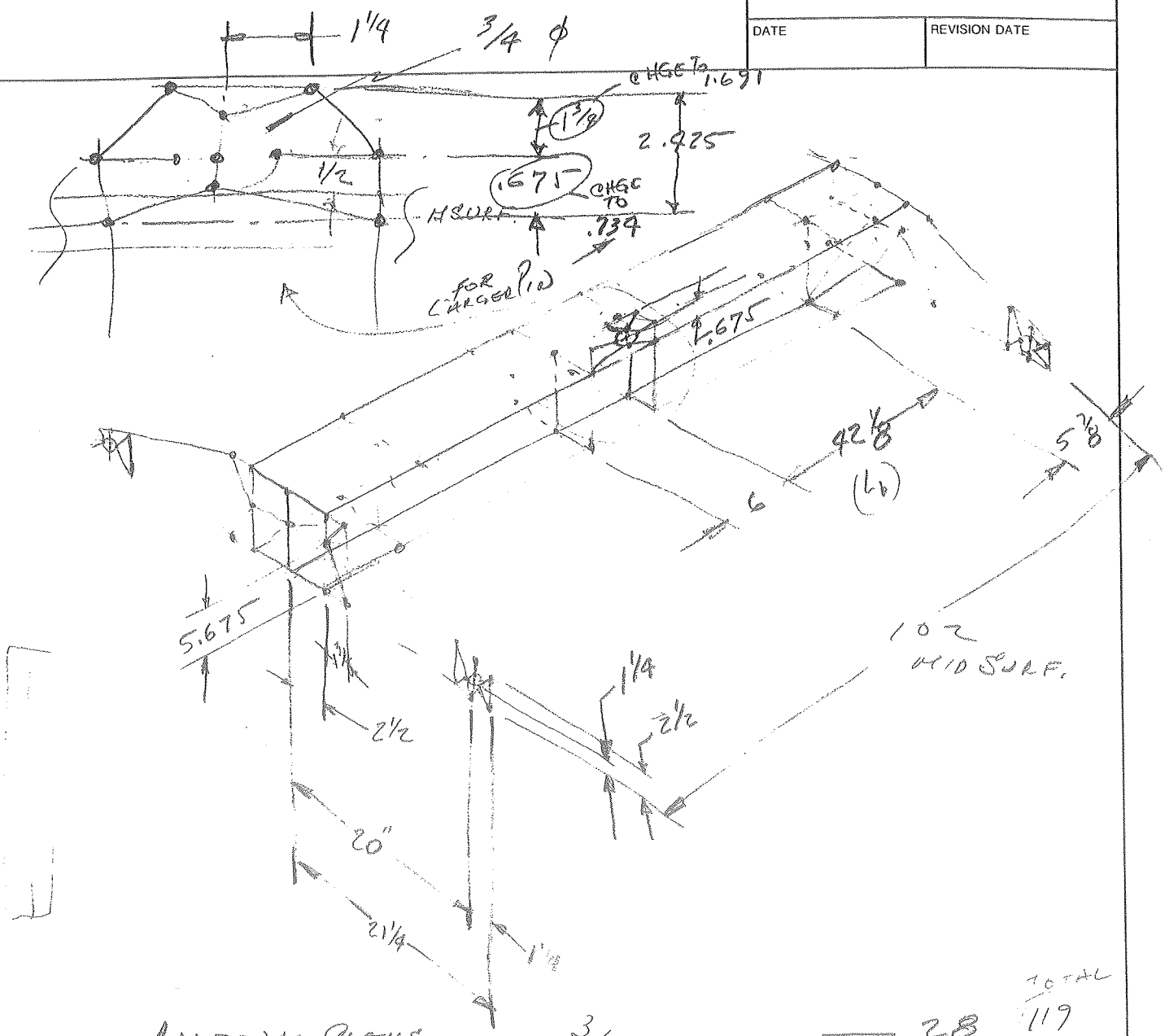

					TOTAL
ADDITIONAL CLEVIS	3/4			28	119
END PLATES	3/4	STEEL		44	SURF
I BM FLGS.	.35	"		~~20~~ 24	68
I BM WEB	.23	"		~~7~~ 9	77
GUSSETS	.50	"		4	81
CLEVIS	.50	"		~~18~~ 10	91
TO MOD. EXIST. BAR → STFNRS	.625	"		~~91~~ 60	~~151~~
				134	

MAT'L: ALUM. 6061-T6

$F_{tu} = F_{cu} = 35 \times 10^3$ & $F_{vu} = 20 \times 10^3$

$F_b = \frac{35000}{3} = 11.7 \times 10^3$ psi ALLOWED, BENDING

$F_v = \frac{20000}{3} = 6.7 \times 10^3$ psi ALLOWED, SHEAR

FERMILAB
ENGINEERING NOTE

SECTION	PROJECT	SERIAL-CATEGORY	PAGE

SUBJECT: BATTERY LIFTING BAR, LOAD TEST SCHEMATIC

NAME: E. M. Wallace

DATE: 12/28/92

REVISION DATE:

(2) 'A' BLOCKS (5050# EA.) 1½' x 3' x 7½'

(2) 'L' BLOCKS (700# EA.) 1" x 1½' x 3"

TOTAL TEST LOAD = 11,500#

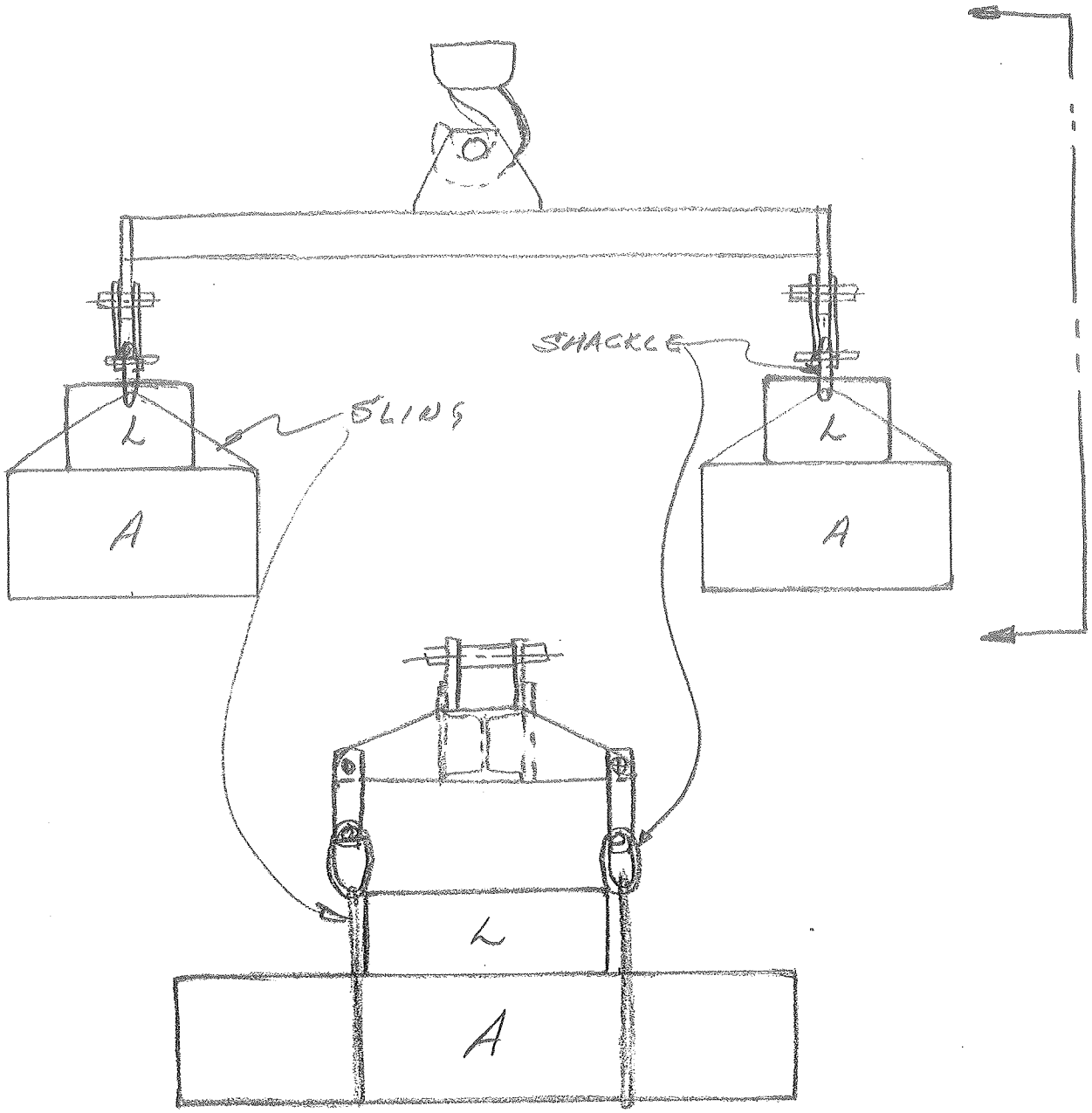

RESEARCH DIVISION/
MECHANICAL SUPPORT DEPARTMENT/
DESIGN AND DRAFTING GROUP
LOUIS KULA -Group Leader
(708)840-3166 P-476
WH13 NX-O MS-221

DATE: 11/17/92

DESIGN AND DRAFTING REQUEST/ ACTIVITY SUMMARY

REQUESTOR/Division	EXT/PAGE	DESIGN & DRAFTING GROUP PROJECT NO.
E. M. VILLEGAS / RD	3686	M92-022
PROJECT LEADER/Division	EXT/PAGE	
E. M. VILLEGAS / RD	3686	

SPECIFIC PROJECT TITLE

BATTERY LIFTING BAR
TSB LOCOMOTIVE

BUDGET CODE (If Applicable)	APPROVALS	RD/MSD APPD	DATE
ESE			

DESCRIPTION OF WORK---include number of people needed, conceptual and/or final design work,revision, etc...

CREATE ASSY. DWG & DETAILS
FROM EXISTING PART.

ONE DRAFTER,
4-5 DAY JOB

SCHEDULE: START DATE 11-17-92 DATE REQUIRED 11/25/92

assigned by/date:	assigned to:	drawing category/series no.
J. RAUCH Nov 17, 1992	RON WILLIAMS	9210,300-ME-285741

biweekly activity summary by: _____ date: _____

1st week HOURS/ MON_____ TUE_____ WED_____ THR_____ FRI_____ SAT_____ TIME SPENT (%)_____

2nd week HOURS/ MON_____ TUE_____ WED_____ THR_____ FRI_____ SAT_____ TIME SPENT (%)_____

SDRC I-DEAS VI: Solid_Modeling

29-DEC-92 13:43:53

Database: battery lifting bar-the locomotive

View : No stored View

Task: Assembly

System: 9-LIFTINGFIXTURE_ASSY

Units : IN

Display : No stored Option

Sin: 1-MAIN
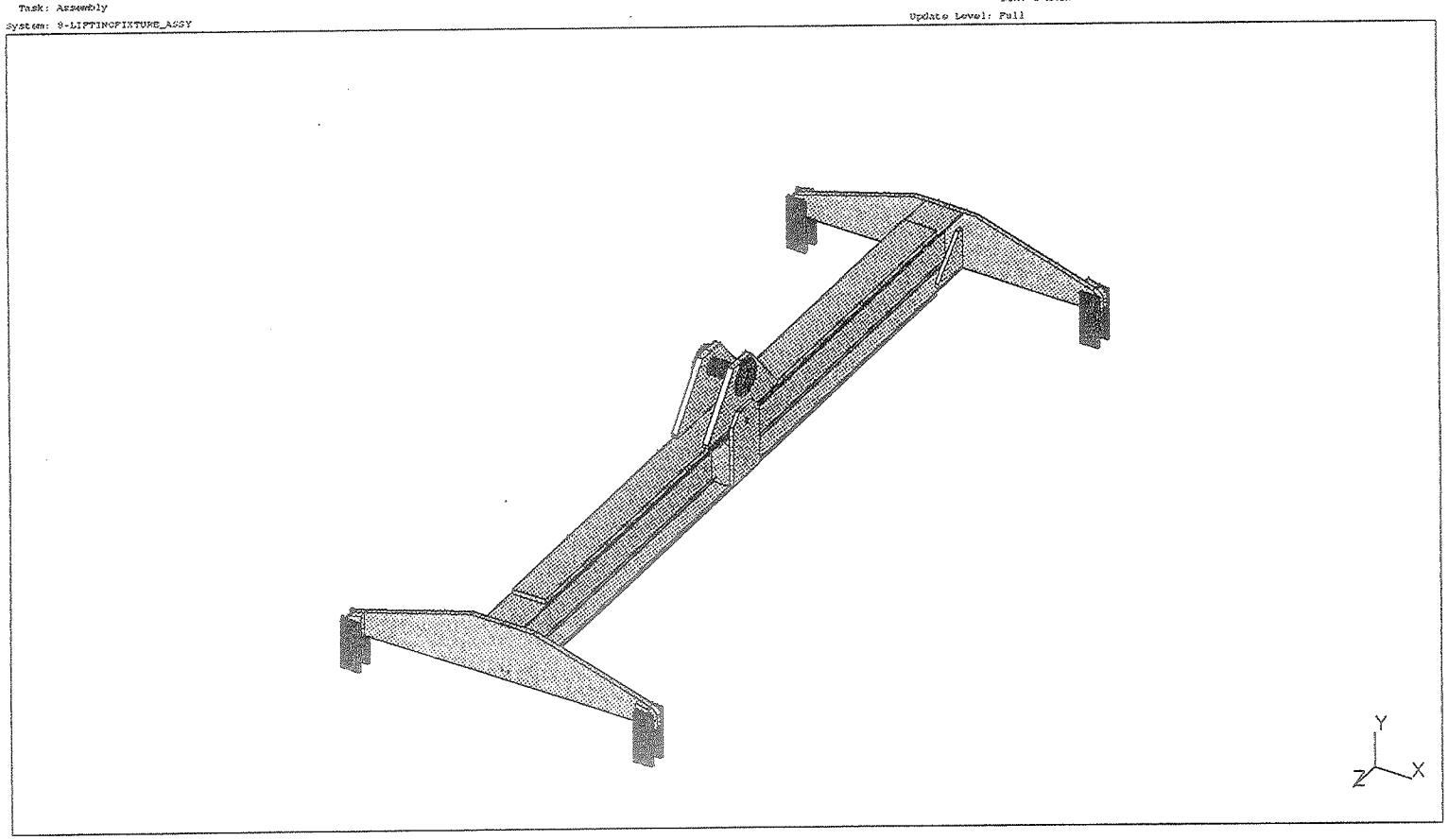
Update Level: Full