Copy of original.
Original will be inserted after the load test.
AMS 2/28/2000

5022TA

BELOW-THE-HOOK LIFTING DEVICE
Engineering Note Cover Page

Lifting Device Numbers: PPD

FNAL Site No.:_____ if applicable Div. Specific No.: 54 if applicable Asset No. _____ if applicable

ASME B30.20 Group: (check one)
- ✓ Group I Structural and Mechanical Lifting Devices
- Group II Vacuum Lifting Devices
- Group III Magnets, Close Proximity Operated
- Group IV Magnets, Remote Operated

Device Name or Description: Lab E Counter Lifting Fixture E815

Device was: (check all applicable)
- Purchased from a Commercial Lifting Device Manufacturer
  - mfg. name: _____
- ✓ Designed and Built at Fermilab MD-285633
- Designed by Fermilab and Built by a Vendor
  - Assy drawing number: _____
- Provided by a User or Other Laboratory
- Other. Describe: _____

Engineering Note Prepared by: Don V. Mitchell Date: 9-14-92

Engineering Note Reviewed by: Zhijing Tang Date: 2-28-2000

Lifting Device Data:

Capacity: 1,250 Lbs

Fixture Weight: 1,565 Lbs

Service: (normal) heavy severe (refer to B30.20 for definitions)

Duty Cycle: — 8, 16 or 24 hour rating (applicable to groups III, and IV)

Inspections Frequency: Normal Service Inspection Classification

Rated Load Test by FNAL (if applicable): Date: _____ Load: _____

Check if Load Test was by Vendor and attach the certificate.

Satisfactory Load Test Witnessed by: _____

Signature (of Load Test Witness): _____

Notes or Special Information:
The original calculations were based on a lifting capacity of 1,250 Lbs, not 1,000 Lbs. The fixture is being re-rated for its full lifting capacity of 1,250 Lbs.
Andy Stefanik 2/28/2000

LIFTING DEVICE

DEVICE NAME: LAB E Counter Lifting Fixture E815

ENGINEERING NOTE NUMBER: ID # 54

DRAWING NUMBER: MD-285633

APPLICABLE STANDARD: Specifications For Aluminum Structures {the Aluminum Association}

RATED LOAD: ~~1000#~~ 1,250 Lbs (1)

TEST LOAD: ~~1,250#~~ 1,565 Lbs (1)

TEST LOAD PERCENT: 125%

LAST LOAD TEST DATE: 10-15-92 (1)

COLOR: Aluminum

STRESS CALCULATIONS:

Done by: Donald V. Mitchell

Date: 9-14-92

Reviewed by: [illegible]

Date: 9-17-92

REMARKS:

OTHER DRAWINGS: MB-285634
MB-285635
MD-285632

(1) Revision 1: Re-rate fixture for a lifting capacity of 1,250 Lbs. The original calcs are based on a lifting capacity of 1,250 Lbs, not 1,000 Lbs.

IDENTIFICATION:

Engineering Note Number & Rated Load Must be Clearly Marked On a Conspicuous Surface.

Andy Stefanik
2/28/2000

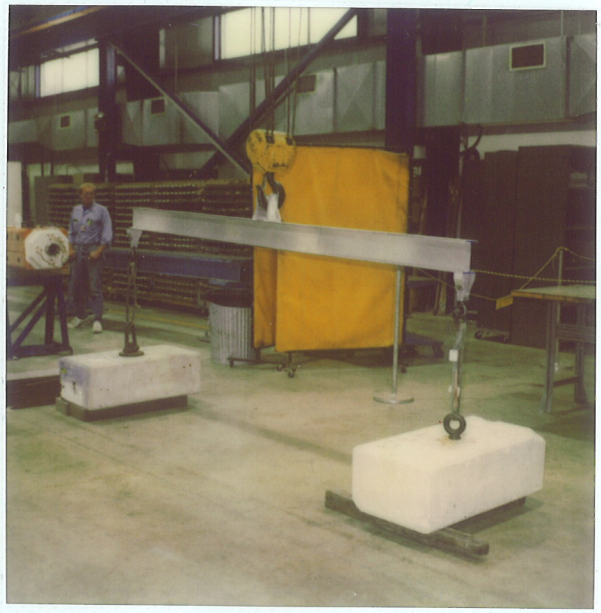

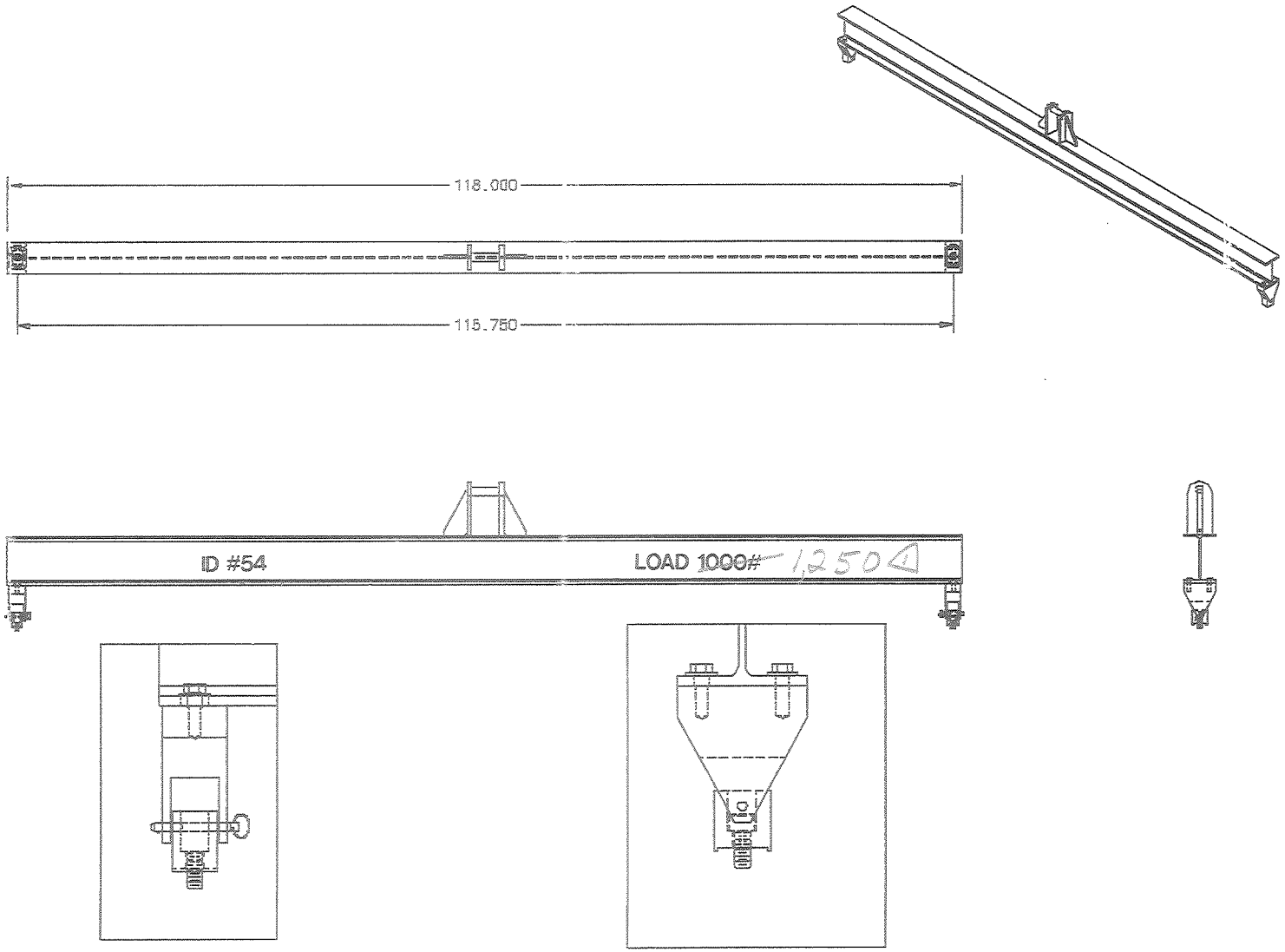
118.000
115.750
ID #54
LOAD 1000# 1,250

Lab E: Counter Lifting Fixture	Stress Analysis	Don Mitchell x4710 9-15-92

Bending Stress: (in WF 6 x 4.03) T6061

$\sigma_{max} = 4945$ psi (see attached MathCad worksheet)

F_b = allowable bending stress $= \dfrac{78{,}000}{(L_b/r_y)^2}$

$F_b = \dfrac{78{,}000}{[(116)(.95)]^2} = 6{,}423$ psi [see attached reference from "Specifications for Aluminum Structures"]

$\sigma_{max} < F_b$ OK

$\delta_{max} = .18''$ (see attached MathCad worksheet)

Bending Stress: (In 1" ø x 3½" long Aluminum Hook Handle)

Fixed Supports, Center load

$$M_{max} = \frac{F}{8}\left(4\frac{L}{2} - L\right) = \frac{1250}{8}\left(4\left(\frac{3.5}{2}\right) - 3.5\right) = 546.88 \text{ in-lb}$$

$$\sigma_{max} = \frac{M_{max}}{S} = \frac{546.88 \text{ in-lb}}{.098175 \text{ in}^3} = 5{,}570 \text{ psi} \quad \text{OK}$$

$$\delta_{max} = \frac{-F\ell^3}{(192)(E)(I)} = \frac{-(1250)(3.5)^3}{(192)(10E6)(.049087)} = .00057'' \quad \text{Trivial}$$

Shear Stress: (on ¼" ø Quick Release Pin) steel

Area $= \pi(1/8)^2 = .049087$ in²

$F = 625\#/2 = 312.5\#$

$\tau = 6{,}366.2$ psi OK

Bearing Stress: (on Pin Plate where quick release pin exerts a load)

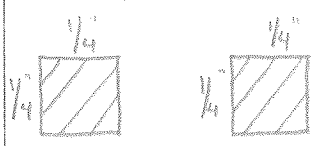

Area = .125 in²

F = 625#

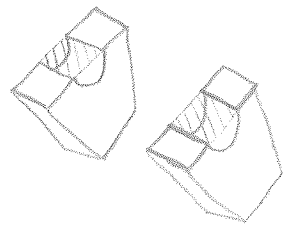

Allowable Bearing = 20,000 psi $\sigma_{bearing} = 5{,}000$ psi OK

Beam Type: AL I 6x4x4# Simple Support Center Load Don Mitchell 9/2/92

$E := 10000000$ $I := 21.99$ $S := 7.33$ $l := 116$ $x := 0 .. \frac{l}{2}$

$F := 1250$ $bf := 4$

$z := 18.6$ $(z = d/Af)$

$rt := .53$ (let rt = .01 for channels) $mid := \frac{l}{2}$

$Lb := 116$ (unsupported Length)

Moment Calculation:

$$M_x := \frac{F \cdot x}{2}$$

Max Moment:

$M_{mid} = 36250$

Deflection Calculation:

$$y_x := \frac{F \cdot x}{48 \cdot E \cdot I} \cdot \left[4 \cdot x^2 - -3 \cdot l^2\right]$$

$$ymax := \frac{-\left[F \cdot l^3\right]}{48 \cdot E \cdot I}$$

$ymax = -0.18485$

Stress Calculation:

$$\sigma_x := \frac{M_x}{S}$$

Max Stress:

$\sigma_{mid} = 4945.42974$ psi

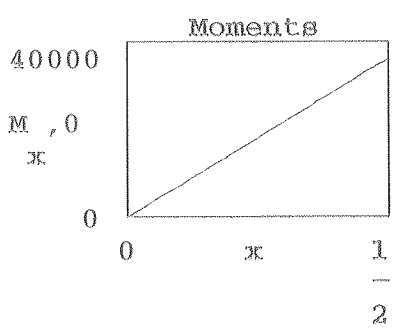

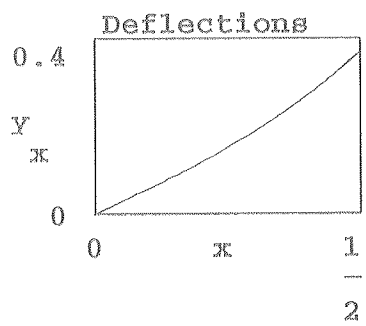

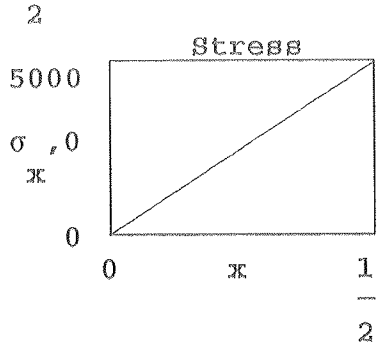

Table A.6
Allowable Stresses for BRIDGE and Similar Type Structures

6061—T6, —T651, —T6510, —T6511 Extrusions, Sheet and Plate, Standard Structural Shapes, Rolled Rod and Bar, Drawn Tube, Pipe

6351-T5 Extrusions

Type of Stress	Type of Member or Component	Spec. No.	Allowable Stress, ksi	
TENSION, axial, net section	Any tension member	1	17	10①
TENSION IN BEAMS, extreme fiber, net section	Rectangular tubes, structural shapes bent about strong axis	2	17	10①
	Round or oval tubes	3	21	12①
	Shapes bent about weak axis, rectangular bars, plates	4	25	14①
BEARING	On rivets and bolts	5	30	16①
	On flat surfaces and pins and on bolts in slotted holes	6	20	11①

			Allowable Stress, ksi, Slenderness ≤ S_1	Slenderness Limit, S_1	Allowable Stress, ksi Slenderness Between S_1 and S_2	Slenderness Limit, S_2	Allowable Stress, ksi Slenderness ≥ S_2
COMPRESSION IN COLUMNS, axial, gross section	All columns	7	17	$\frac{L}{r} = 8.0$	$17.9-0.112\frac{L}{r}$	$\frac{L}{r} = 66$	$\frac{45{,}000}{(L/r)^2}$
			11①	$\frac{L}{r} = 62$①	$17.9-0.112\frac{L}{r}$	$\frac{L}{r} = 66$	$\frac{45{,}000}{(L/r)^2}$
COMPRESSION IN COMPONENTS OF COLUMNS, gross section	Outstanding flanges and legs	8	17	$\frac{b}{t} = 5.0$	$20.5-0.70\frac{b}{t}$	$\frac{b}{t} = 12$	$\frac{1{,}740}{(b/t)^2}$
			11①	— — —	11①	$\frac{b}{t} = 13$①	$\frac{1{,}740}{(b/t)^2}$
	Flat plates with both edges supported	9	17	$\frac{b}{t} = 16$	$20.5-0.22\frac{b}{t}$	$\frac{b}{t} = 33$	$\frac{430}{(b/t)}$
			11①	— — —	11①	$\frac{b}{t} = 39$①	$\frac{430}{(b/t)}$
	Curved plates supported on both edges, walls of round or oval tubes	10	17	$\frac{R}{t} = 13$	$19.6-0.71\sqrt{\frac{R}{t}}$	$\frac{R}{t} = 141$	$\frac{2{,}800}{(R/t)(1+\sqrt{R/t}/35)^2}$
			11①	$\frac{R}{t} = 5.2$①	$12.0-0.44\sqrt{\frac{R}{t}}$	$\frac{R}{t} = 290$	$\frac{2{,}800}{(R/t)(1+\sqrt{R/t}/35)^2}$
COMPRESSION IN BEAMS, extreme fiber, gross section	Single web beams bent about strong axis	11	19	$\frac{L_b}{r_u} = 21$	$21.3-0.111\frac{L_b}{r_u}$	$\frac{L_b}{r_u} = 79$	$\frac{78{,}000}{(L_b/r_u)^2}$
			11①	— — —	11①	$\frac{L_b}{r_u} = 84$①	$\frac{78{,}000}{(L_b/r_u)^2}$
	Round or oval tubes	12	22	$\frac{R_b}{t} = 29$	$35.0-2.4\sqrt{\frac{R_b}{t}}$	$\frac{R_b}{t} = 83$	Same as Specification No. 10 (See Par. 3.4.12)
			14①	$\frac{R_b}{t} = 35$①	$35.0-2.4\sqrt{\frac{R_b}{t}}$	$\frac{R_b}{t} = 83$	Same as Specification No. 10 (See Par. 3.4.12)
	Solid rectangular beams	13	25	$\frac{d}{t}\sqrt{\frac{L_b}{d}} = 13$	$36.1-0.83\frac{d}{t}\sqrt{\frac{L_b}{d}}$	$\frac{d}{t}\sqrt{\frac{L_b}{d}} = 29$	$\frac{10{,}200}{(d/t)^2(L_b/d)}$
			14①	$\frac{d}{t}\sqrt{\frac{L_b}{d}} = 27$①	$36.1-0.83\frac{d}{t}\sqrt{\frac{L_b}{d}}$	$\frac{d}{t}\sqrt{\frac{L_b}{d}} = 29$	$\frac{10{,}200}{(d/t)^2(L_b/d)}$
	Rectangular tubes and box sections	14	19	$\frac{L_bS_c}{I_y} = 120$	$21.3-0.21\sqrt{\frac{L_bS_c}{I_y}}$	$\frac{L_bS_c}{I_y} = 1700$	$\frac{21{,}000}{(L_bS_c/I_y)}$
			11①	— — —	11①	$\frac{L_bS_c}{I_y} = 1910$①	$\frac{21{,}000}{(L_bS_c/I_y)}$
COMPRESSION IN COMPONENTS OF BEAMS, (component under uniform compression), gross section	Outstanding flanges	15	19	$\frac{b}{t} = 6.4$	$24.3-0.83\frac{b}{t}$	$\frac{b}{t} = 10$	$\frac{162}{(b/t)}$
			11①	— — —	11①	$\frac{b}{t} = 15$①	$\frac{162}{(b/t)}$
	Flat plates with both edges supported	16	19	$\frac{b}{t} = 20$	$24.3-0.26\frac{b}{t}$	$\frac{b}{t} = 33$	$\frac{520}{(b/t)}$
			11①	— — —	11①	$\frac{b}{t} = 47$①	$\frac{520}{(b/t)}$
COMPRESSION IN COMPONENTS OF BEAMS, (component under bending in own plane), gross section	Flat plates with compression edge free, tension edge supported	17	25	$\frac{b}{t} = 8.8$	$36.1-1.26\frac{b}{t}$	$\frac{b}{t} = 19$	$\frac{4{,}400}{(b/t)^2}$
			14①	$\frac{b}{t} = 18$①	$36.1-1.26\frac{b}{t}$	$\frac{b}{t} = 19$	$\frac{4{,}400}{(b/t)^2}$
	Flat plates with both edges supported	18	25	$\frac{h}{t} = 46$	$36.1-0.24\frac{h}{t}$	$\frac{h}{t} = 75$	$\frac{1{,}350}{(h/t)}$
			14①	— — —	14①	$\frac{h}{t} = 96$①	$\frac{1{,}350}{(h/t)}$
	Flat plates with horizontal stiffener, both edges supported	19	25	$\frac{h}{t} = 107$	$36.1-0.104\frac{h}{t}$	$\frac{h}{t} = 173$	$\frac{3{,}100}{(h/t)}$
			14①	— — —	14①	$\frac{h}{t} = 221$①	$\frac{3{,}100}{(h/t)}$
SHEAR IN WEBS, gross section	Unstiffened flat webs	20	11	$\frac{h}{t} = 33$	$13.9-0.089\frac{h}{t}$	$\frac{h}{t} = 65$	$\frac{34{,}000}{(h/t)^2}$
			6.5①	— — —	6.5①	$\frac{h}{t} = 72$①	$\frac{34{,}000}{(h/t)^2}$
	Stiffened flat webs $a_e = a_1/\sqrt{1+0.7(a_1/a_2)^2}$	21	11	— — —	11	$\frac{a_e}{t} = 65$	$\frac{47{,}000}{(a_e/t)^2}$
			6.5①	— — —	6.5①	$\frac{a_e}{t} = 85$①	$\frac{47{,}000}{(a_e/t)^2}$

WHITE BARS apply to nonwelded members and to welded members at locations farther than 1.0 in. from a weld. SHADED BARS apply within 1.0 in. of a weld.

① For all thicknesses with filler alloys 5356 or 5556. With filler alloys 4043, 5554 or 5654 values apply to metal 0.375 in. or less in thickness; for greater thicknesses multiply allowable stresses by 0.8.

② For all thicknesses with filler alloys 5356 or 5556; for metal 0.375 in. or less in thickness with filler alloys 4043, 5554 or 5654.

Shear Stress in Fillet Welds:

Fillet weld around 1"ø Hook Handle:

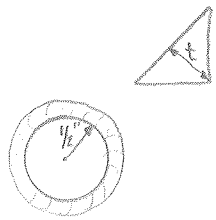

Length of weld = $(2\pi r)$(2 fillet welds)

$= \left(2\pi \frac{1}{2}\right)(2) = 2\pi = 6.283''$

Area of weld = $6.283''\,t$ Load = $1{,}250^{\#}$

The allowable shear stress is $5{,}000$ psi $= \tau_{all}$

Calculate the required weld thickness:

$$\frac{L}{A} = \tau_{all}$$

$$\frac{1{,}250^{\#}}{6.283\,t} = 5{,}000 \text{ psi}$$

$$t = \frac{1{,}250^{\#}}{(6.283'')(5000\text{psi})} = .0397'' \sim 3/64''$$

However, the minimum fillet weld for ½" to 1" material is:

Weld size = ¼" 4043 Filler alloy

Fillet Weld at base of Hook Handle:

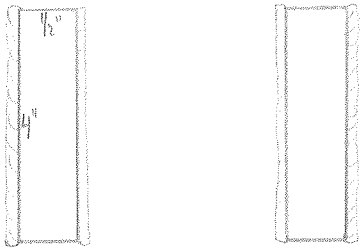

Shear area $= (4'')(4)\,t = 16t$ in^2

Load = $1{,}250^{\#}$

Allowable shear stress = $5{,}000$ psi

Required thickness $= \dfrac{1250^{\#}}{(16)(5000)} = t = .0156''$

However, the minimum fillet weld = 3/16"

Calculate the required weld length for a 3/16" weld:

Shear area $= L(3/16)$

Load = $1{,}250^{\#}$

Required length $= \dfrac{(1250)(16)}{(3)(5000)} = 1.333''$

Continued

Modify weld group:

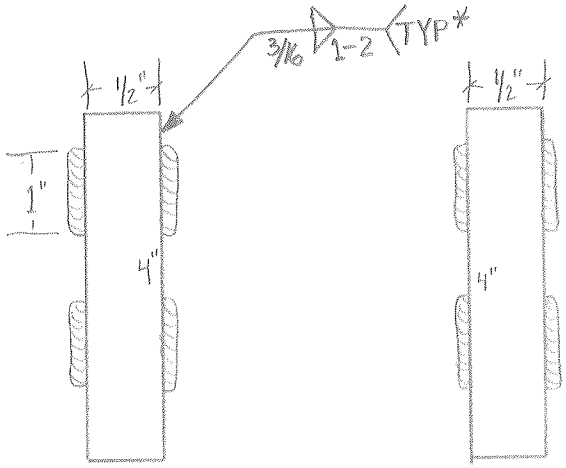

* NOTE: USE Filler Wire 4043

TABLE 7.1.3.1.
GUIDE TO THE CHOICE OF ALUMINUM FILLER ALLOYS FOR GENERAL PURPOSE WELDING

Base Metal→ welded to / Base Metal ↓	319.0, 333.0, 354.0, 355.0, C355.0	356.0, A356.0, A357.0, 359.0, 413.0, 443.0, A444.0	511.0, 512.0, 513.0, 514.0	7005, 7046, 7146, 710.0, 712.0	6070	6005, 6061, 6063, 6101, 6151, 6201, 6351, 6951,	5456	5454
1060, 1350	ER4145*c,i*	ER4043*i,f*	ER4043*e,i*	ER4043*i*	ER4043*i*	ER4043*i*	ER5356*c*	ER4043*e,i*
1100, 3003, Alclad 3003	ER4145*c,i*	ER4043*i,f*	ER4043*e,i*	ER4043*i*	ER4043*i*	ER4043*i*	ER5356*c*	ER4043*e,i*
2219	ER4145*g,c,i*	ER4145*c,i*	ER4043*i*	ER4043*i*	ER4043*f,i*	ER4043*f,i*	ER4043	ER4043*i*
3004, Alclad 3004	ER4043*i*	ER4043*i*	ER5654*b*	ER5356*e*	ER4043*e*	ER4043*b*	ER5356*e*	ER5654*b*
5005, 5050	ER4043*i*	ER4043*i*	ER5654*b*	ER5356*e*	ER4043*e*	ER4043*b*	ER5356*e*	ER5654*b*
5052, 5652a	ER4043*i*	ER4043*b,i*	ER5654*b*	ER5356*e*	ER5356*b,c*	ER5356*b,c*	ER5356*b*	ER5654*b*
5083	—	ER5356*c,e,i*	ER5356*e*	ER5183*e*	ER5356*e*	ER5356*e*	ER5183*e*	ER5356*e*
5086	—	ER5356*c,e,i*	ER5356*e*	ER5356*e*	ER5356*e*	ER5356*e*	ER5356*e*	ER5356*b*
5154, 5254*a*	—	ER4043*b,i*	ER5654*b*	ER5356*b*	ER5356*b,c*	ER5356*b,c*	ER5356*b*	ER5654*b*
5454	ER4043*i*	ER4043*b,i*	ER5654*b*	ER5356*b*	ER5356*b,c*	ER5356*b,c*	ER5356*b*	ER5554*c,e*
5456	—	ER4043*b,i*	ER5356*e*	ER5556*e*	ER5356*e*	ER5356*e*	ER5556*e*	—
6005, 6061, 6063, 6101, 6151, 6201, 6351, 6951	ER4145*c,i*	ER5356*c,e,i*	ER5356*b,c*	ER5356*b,c,i*	ER4043*b,i*	ER4043*b,i*	—	—
6070	ER4145*c,i*	ER4043*e,i*	ER5356*c,e*	ER5356*c,e,i*	ER4043*e,i*	—	—	—
7005, 7046, 7146, 710.0, 712.0	ER4043*i*	ER4043*b,i*	ER5356*b*	ER5039*e*	—	—	—	—
511.0, 512.0, 513.0, 514.0	—	ER4043*b,i*	ER5654*b,d*	—	—	—	—	—
356.0, A356.0, A357.0, 359.0, 413.0, 443.0, A444.0	ER4145*c,i*	ER4043*d,i*	—	—	—	—	—	—
319.0, 333.0, 354.0, 355.0, C355.0	ER4145*c,d,i*	—	—	—	—	—	—	—

a. Base metal alloys 5254 and 5652 are used for hydrogen peroxide service. ER5654 filler metal is used for welding both alloys for service at 150° F and below.
b. ER5183, ER5356, ER5554, ER5556, and ER5654 may be used. In some cases, they provide: (1) improved color match after anodizing treatment, (2) highest weld ductility, and (3) higher weld strength. ER5554 is suitable for elevated temperature service.
c. ER4043 may be used for some applications.
d. Filler metal with the same analysis as the base metal is sometimes used.
e. ER5183, ER5356, or ER5556 may be used.
f. ER4145 may be used for some applications.
g. ER2319 may be used for some applications
i. ER4047 may be used for some applications.
j. ER1100 may be used for some applications.

5154 5254*a*	5086	5083	5052 5652*a*	5005 5050	3004 Alc. 3004	2219	1100 3003 Alc. 3003	1060 1350	←Base Metal welded to Base Metal ↓
ER4043*e,i*	ER5356*c*	ER5356*c*	ER4043*i*	ER1100*c*	ER4043	ER4145	ER1100*c*	ER1100*c*	1060, 1350
ER4043*e,i*	ER5356*c*	ER5356*c*	ER4043*e,i*	ER4043*e*	ER4043*e*	ER4145	ER1100*c*	—	1100, 3003 Alclad 3003
ER4043*i*	ER4043	ER4043	ER4043*i*	ER4043	ER4043	ER2319*c,f,i*	—	—	2219
ER5654*b*	ER5356*e*	ER5356*e*	ER4043*e,i*	ER4043*e*	ER4043*e*	—	—	—	3004, Alclad 3004
ER5654*b*	ER5356*e*	ER5356*e*	ER4043*e,i*	ER4043*d,e*	—	—	—	—	5005, 5050
ER5654*b*	ER5356*e*	ER5356*e*	ER5654*a,b,c*	—	—	—	—	—	5052, 5652*a*
ER5356*e*	ER5356*e*	ER5183*e*	—	—	—	—	—	—	5083
ER5356*b*	ER5356*e*	—	—	—	—	—	—	—	5086
ER5654*a,b*	—	—	—	—	—	—	—	—	5154, 5254*a*

Notes:
1. Service conditions such as immersion in fresh or salt water, exposure to specific chemicals, or a sustained high temperature (over 150° F) may limit the choice of filler metals. Filler metals ER5356, ER5183, ER5556, and ER5654 are not recommended for sustained elevated temperature service.
2. Recommendations in this table apply to gas shielded arc welding processes. For oxyfuel gas welding, only ER1100, ER4043, ER4047, and ER4145 filler metals are ordinarily used.
3. Filler metals are listed in AWS Specification A5.10-80.
4. Where no filler metal is listed, base metal combinations are not recommended for welding.

TABLE 7.1.3.2
ALLOWABLE SHEAR STRESSES IN FILLET WELDS FOR BUILDING TYPE STRUCTURES-ksi
(Shear Stress Is Considered To Be Equal To The Load Divided By The Throat Area)

Filler Alloy‡	1100	4043	5183	5356 5554	5556	5654
Parent Alloy						
1100	3.2	4.8†	—	—	—	—
3003	3.2	5	—	—	—	—
Alclad 3004		5	8	7	8†	—
5052	—	5	8	7	8.5	5
5083	—	—	8	7	8.5	—
5086	—	—	8	7	8.5	—
5154	—	—	8	7	8.5	5
5454	—	5	8	7	8.5	—
5456	—	—	8	7	8.5	—
6005, 6061, 6351	—	5	8	7	8.5	5
6063	—	5*	6.5†	6.5†	6.5†	5

†Values controlled by the shear strength of the parent metal.
‡Minimum expected shear strengths of filler alloys are:

Alloy				Alloy			
	1100	7.5	ksi		5554	17	ksi
	4043	11.5			5556	20	
	5183	18.5			5654	12	
	5356	17					

*8 ksi for welds joining round or oval members subject to bending and loaded transversely in socket type base assemblies for alloy 6063 lighting poles through 0.375″ wall thickness, when welded in T4 temper and artificially aged to T6 temper following welding. 5.9 ksi for lighting pole 6063 tubular joints other than socket type.

hook_weldment.igs

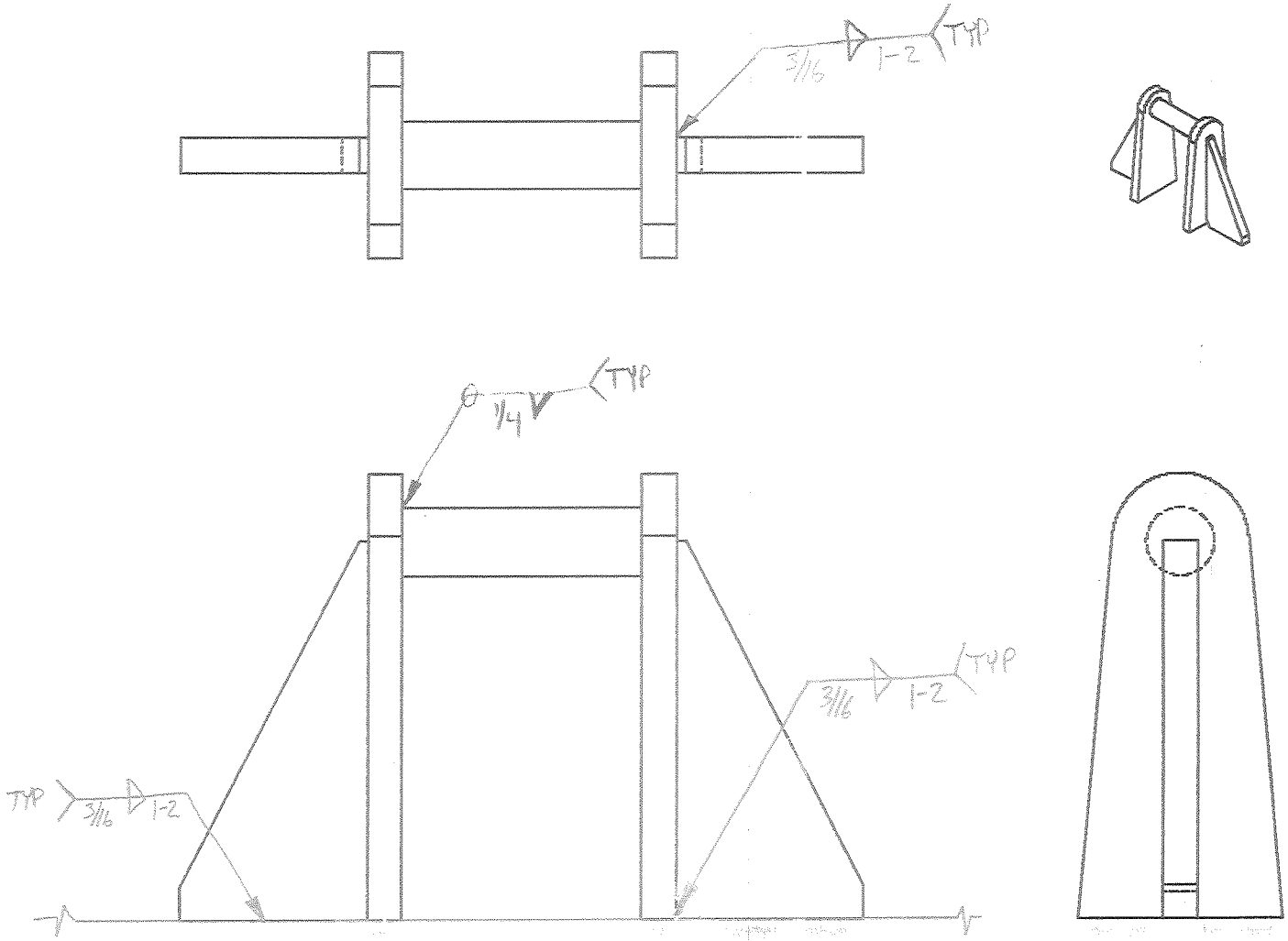

tol: ± 1/16