BELOW-THE-HOOK LIFTING DEVICE
Engineering Note Cover Page

Lifting Device Numbers: I.D. NO 96

FNAL Site No.:_____ if applicable Div. Specific No.: _____ if applicable Asset No. _____ if applicable

ASME B30.20 Group: (check one)
- ˇ Group I Structural and Mechanical Lifting Devices
- ˇ Group II Vacuum Lifting Devices
- ˇ Group III Magnets, Close Proximity Operated
- ˇ Group IV Magnets, Remote Operated

Device Name or Description: MINISKIRT TRANSPORT (CART) UNIT

Device was: (check all applicable)
- ˇ Purchased from a Commercial Lifting Device Manufacturer
  mfg. name: _____
- ✓ Designed and Built at Fermilab
- ˇ Designed by Fermilab and Built by a Vendor
  Assy drawing number: _____
- ˇ Provided by a User or Other Laboratory
- ˇ Other. Describe: _____

Engineering Note Prepared by: A. SZYMULANSKI Date: SEPT. 16. 99

Engineering Note Reviewed by: HARRY CARTER Date: SEPT. 30. 99

Lifting Device Data:

Capacity: 2,600 [lbs]

Fixture Weight: 580 [lbs]. (CART WEIGHT: 800 lbs)

Service: ✓ normal ˇ heavy ˇ severe (refer to B30.20 for definitions)

Duty Cycle: _____ 8, 16 or 24 hour rating (applicable to groups III, and IV)

Inspections Frequency: _____

Rated Load Test by FNAL (if applicable): Date: OCT. 21. 99 Load: 3250 [lbs]

ˇ Check if Load Test was by Vendor and attach the certificate.

Satisfactory Load Test Witnessed by: HARRY CARTER LEONARD A. SZYMULANSKI

Signature (of Load Test Witness): Harry T. Carter

Notes or Special Information:

THE ESSENTIAL ELEMENTS FOR HANDLING "MINISKIRT TRANSPORT CART (TRANSPORT GIZMO)" ARE:

a) LIFTING FIXTURE, DWG MD-382230

b) STABILIZING BEAM, DWG. 382332

THE STATIC AND STRENGTH ANALYSIS ASPECTS ARE COVERED BY THE ENGINEERING NOTE.

FERMILAB
ENGINEERING NOTE

SECTION	PROJECT	SERIAL-CATEGORY	PAGE 1 of 2

SUBJECT: MINI SKIRT TRANSPORT (CART) UNIT TEST (MAB)

NAME:

DATE: OCT. 21, 99

REVISION DATE:

TSI
TRY
WITH
NL 105
SPREADER
BAR

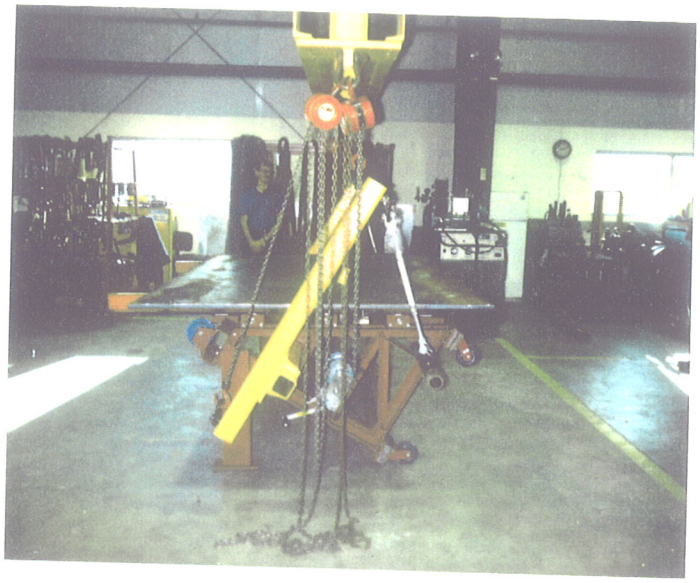

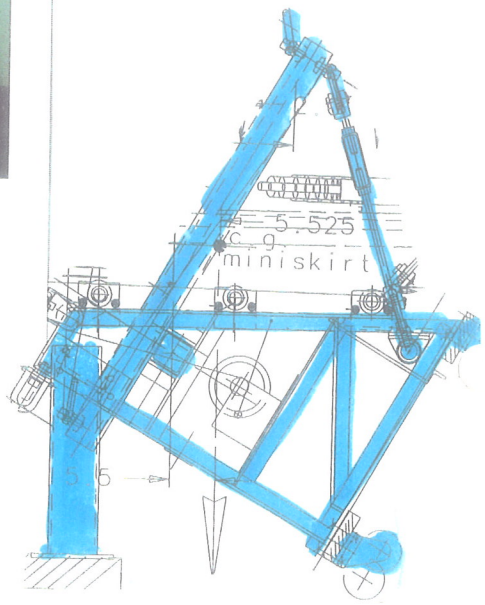

Fermilab

COLLIDER DETECTOR AT FERMILAB
ENGINEERING NOTE

NUMBER: CDF/DOC/MUON/GROUP/5149 DATE: SEPT. 16, 99

SYSTEM: CDF - MUON LOWER CMEX
(MINI SKIRT)

TITLE: " MINISKIRT " TRANSPORT CART

AUTHOR(S): ANDREW SZYMULANSKI

REVIEWER: HARRY F. CARTER

ABSTRACT/SUMMARY:

THE "MINI SKIRT" TRANSPORT CART IS A STEEL STRUCTURAL SUPPORT DEVICE, WHICH WILL ALLOW FOR POSITION MANIPULATION, SET UP, AND ROLLING OUT OF THE "MINISKIRT" DETECTOR TO THE COLLISION HALL LOCATION.

KEY WORDS:

THE WELDED STRUCTURE MUST WITHSTAND ALTERNATING MAGNITUDES OF REACTION FORCES, RESULTING FROM THE DIFFERENT ORIENTATION OF THE WHOLE ASSEMBLY AT DIFFERENT STEPS IN THE HANDLING PROCESS. A STRESS ANALYSIS FOR ESSENTIAL PARTS OF THE STRUCTURE HAS BEEN PERFORMED TO PROVE THE ENGINEERING SOUNDNESS OF THIS DESIGN.

CONTENTS

1. DESCRIPTION

2. STATIC ANALYSIS - HORIZONTAL LOAD

3. STATIC AND STRESS ANALYSES - HANDLING

4. REFERENCES

5. DRAWING DOCUMENTATION

1. DESCRIPTION

THE CART WILL SERVE FOLLOWING PURPOSES:

1.1 SERVE AS AN UNLOADING STRUCTURE FOR UNLOADING MINISKIRT ASSEMBLY FROM TRANSPORT TRUCK AT "CDF" BLDG.

1.2 TRANSPORT UNIT OF THE MINISKIRT INSIDE THE CDF BLDG.

2. SELECTED POINTS OF THE ENGINEERING ANALYSIS FOR THE CART STRUCTURE.

2.1 STATIC ANALYSIS

THE BASIC GEOMETRY IS SHOWN ON A FOLLOWING ARRANGEMENT DRAWING (FIG. 1). THE REACTION FORCES AFFECTING THE MECHANICAL CONNECTION OF THE AUXILIARY SUPPORT AS WELL AS THE WELDMENT OF THE STRUCTURE WILL RESULT FROM THE STRUCTURE ORIENTATION.
THIS ANALYSIS SHOWS THE MAGNITUDE OF CRITICAL FORCES AFFECTING THE INTEGRITY OF THE STRUCTURE.

2.1.1

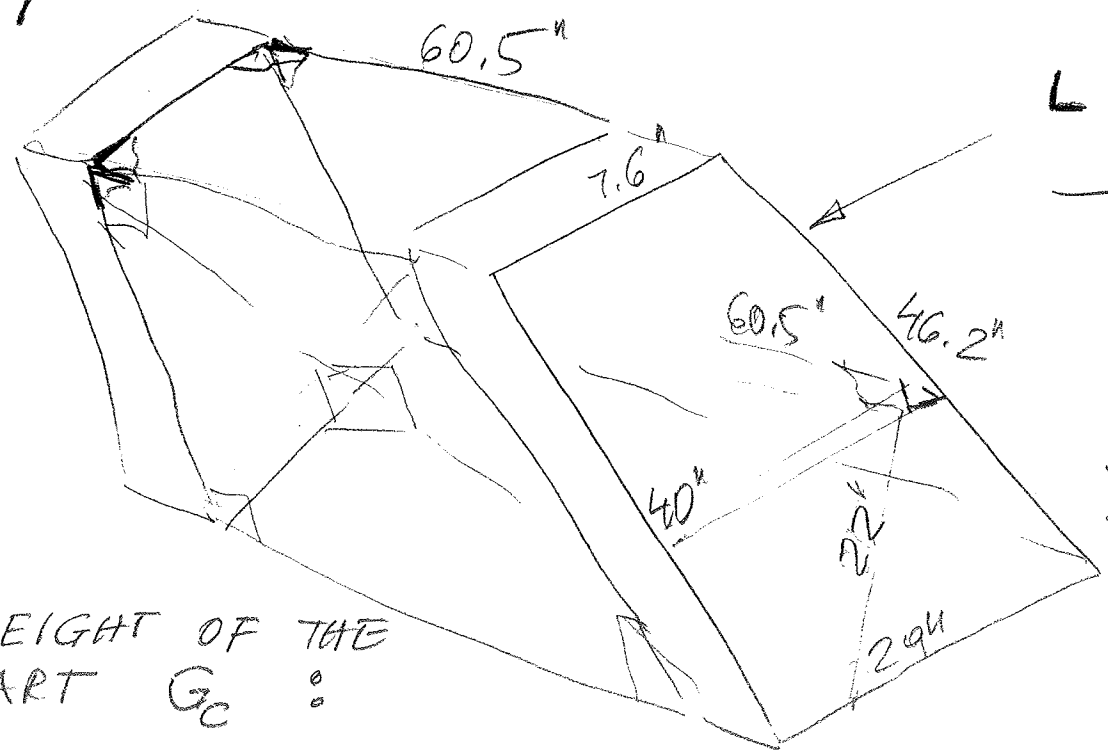

WELDED STRUCTURE SCHEMATIC

WEIGHT OF THE CART G_C :

60.5	5x	302.5
7.6	4x	30.4
46.2	4x	184.8
29	4x	116.
40	4x	160
11	4x	44
13	4x	52
4	8x	32
15.3	4x	61.2
23	4x	92
22	4x	88
69	2x	138

Σ 1300.9

$\frac{1300.9}{12} = 108.4$

L 2 × 2 × 3/8 WEIGHT PER Ft = 4.7 lbs

108.4 × 4.7 = 510 [lbs]

ASSUMING ADDITIONAL COMPONENTS ≈ 250 lbs

TOTAL WEIGHT OF THE CART

G_C = 760 [lbs]

2.1.2 STATIC ANALYSIS – SEE ARRANGEMENT OF FIG. 2

$$\sum R_y = 0$$

$$R_1 + R_2 - G - G_c = 0$$

$$R_1 + R_2 = G + G_c$$

$$R_1 + R_2 = 2000 + 760$$

$$R_1 + R_2 = 2760 \qquad (1)$$

$$\sum M_{(R_1)} = 0$$

$$-G(13.295) - G_c(21.9) + R_2(37.5) = 0$$

$$37.5\, R_2 = 2000(13.295) + 760(21.9)$$

$$R_2 = \frac{2000(13.295) + 760(21.9)}{37.5}$$

$$R_2 = 1152.9 \text{ [lbs]}$$

$$R_1 = 2350 - 1152.9$$

$$R_1 = 1197 \text{ [lbs]}$$

REV.	DESCRIPTION	DRAWN	DATE
		APPROVED	DATE

CDF-UNLOADING FROM TRUCK

A — POSITIONING ON THE MAIN LEVEL

B

C

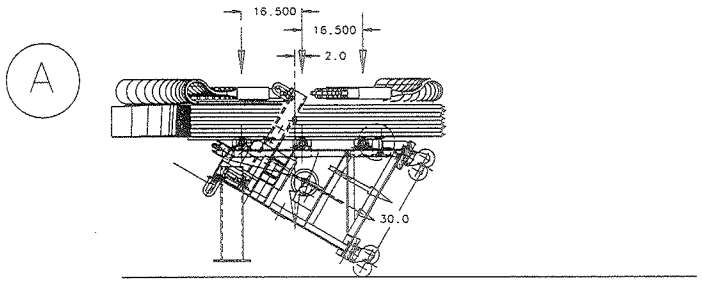

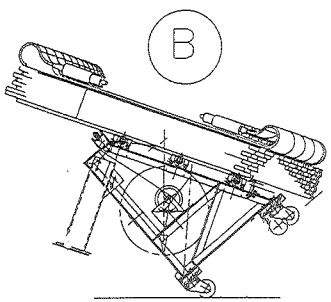

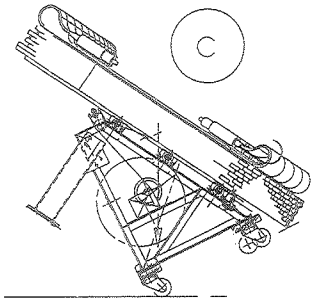

D — CDF LOWER LEVEL

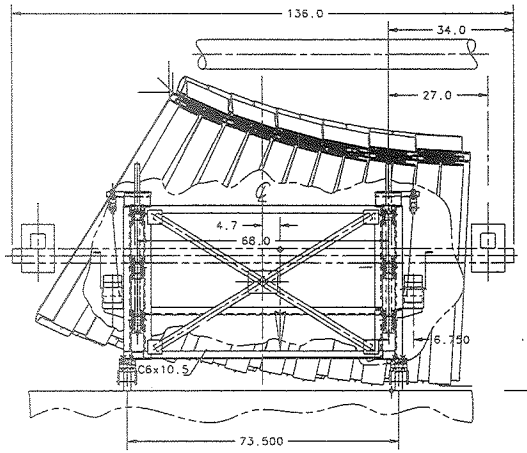

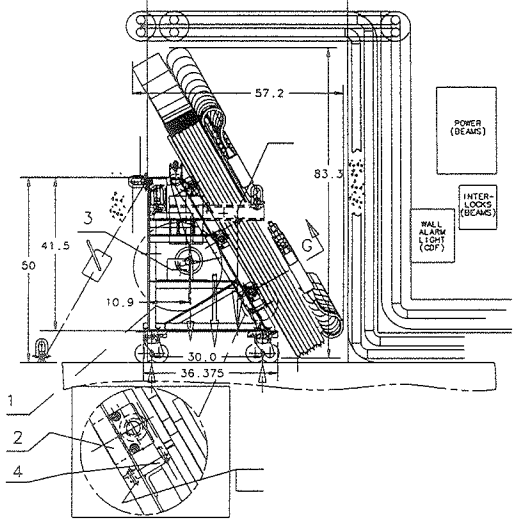

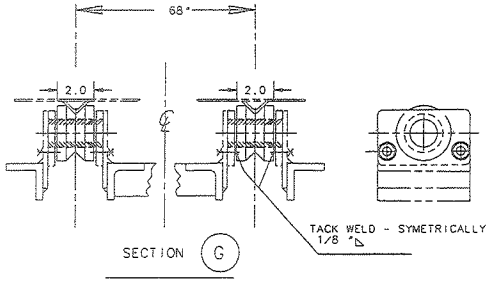

ITEM NO.	PART NO.	DESCRIPTION OR SIZE	QTY. REQ.
4		LOCK PLATE	2
3		WINCH MOUNTING ARRANG.	2
2		SUPPORT ROLL ASSEMBLY	6
1		FRAME WELDMENT	1

PARTS LIST

UNLESS OTHERWISE SPECIFIED			ORIGINATOR	ASZ JULY 13.99
.XX	.XXX	ANGLES	DRAWN	
±	±	±	CHECKED	
			APPROVED	

1. BREAK ALL SHARP EDGES .015 MAX.
2. DO NOT SCALE DRWG.
3. DIMENSIONING IN ACCORD WITH ANSI Y14.5M-1982 STD'S.
4. ALL DIMENSIONS ARE IN INCHES.

√ MAX ALL MACHINED SURFACES

USED ON

MATERIAL

FERMI NATIONAL ACCELERATOR LABORATORY
UNITED STATES DEPARTMENT OF ENERGY

PPD/MECHANICAL SUPPORT

SCALE	DRAWING NUMBER	SHEET NO.	REV.
	2563.457-MB-339965 transportgizmonw	1 OF 1	

FIG. 1

WEIGHT OF THE "MINISKIRT" DETECTOR
G = 2000 [lbs]

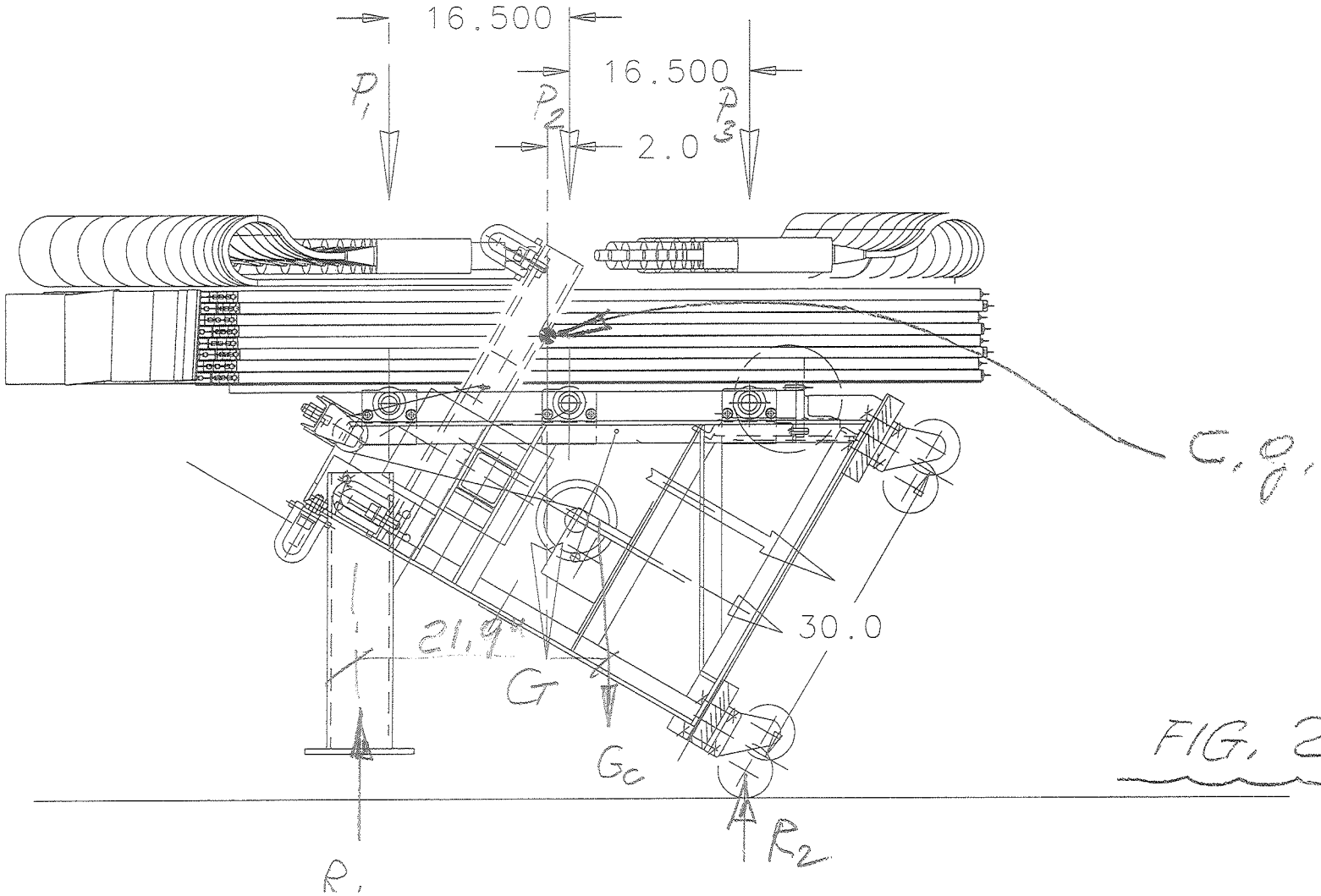

FIG. 2

2.1.3 FIND COMPONENTS P_1, P_2, P_3 (FIG. 2)

$$P_1 + P_2 + P_3 = G$$

(1) $$P_1 + P_2 + P_3 = 2000$$

$$\sum M_{(P_1)}$$

$$G(16.5-2) = P_2(16.5) + P_3(16.5+16.5)$$

(2) $$2000(14.5) = 16.5\,P_2 + 33\,P_3$$

(3) $$\frac{P_1}{2} = \frac{P_2}{16.5-2}$$

$$14.5\,P_1 = 2P_2$$

$$P_1 = \underline{0.137\,P_2}$$

$$\frac{P_3}{2} = \frac{P_2}{16.5+2}$$

$$18.5\,P_3 = 2P_2$$

$$P_3 = \underline{0.108\,P_2}$$

FROM (1)

$$P_1 = 2000 - (P_2 + P_3)$$

FROM (2)

$$2000(14.5) = 16.5\,P_2 + 33(0.108)\,P_2$$

$$29000 = 16.5\,P_2 + 3.564\,P_2$$

$$P_2 \quad \underline{1445.37} \quad \text{lbs}$$

$$P_1 = 0.137\,P_2$$

$$\therefore P_1 = \underline{198} \quad \text{lbs}$$

FROM (1)

$$P_1 = 2000 - (P_2 + P_3)$$

$$198 = 2000 - 1445.37 - P_3$$

$$P_3 = 2000 - 1445.37 - 198$$

$$P_3 = 356.63 \quad [\text{lbs}]$$

P_1	—	198	[lbs]
P_2	—	1445.37	[lbs]
P_3	—	356.63	[lbs]

2.1.4 FIND THE BENDING STRESS IN THE ANGLE BRACKET, AS SHOWN IN FIG 3 AND FIG. 4

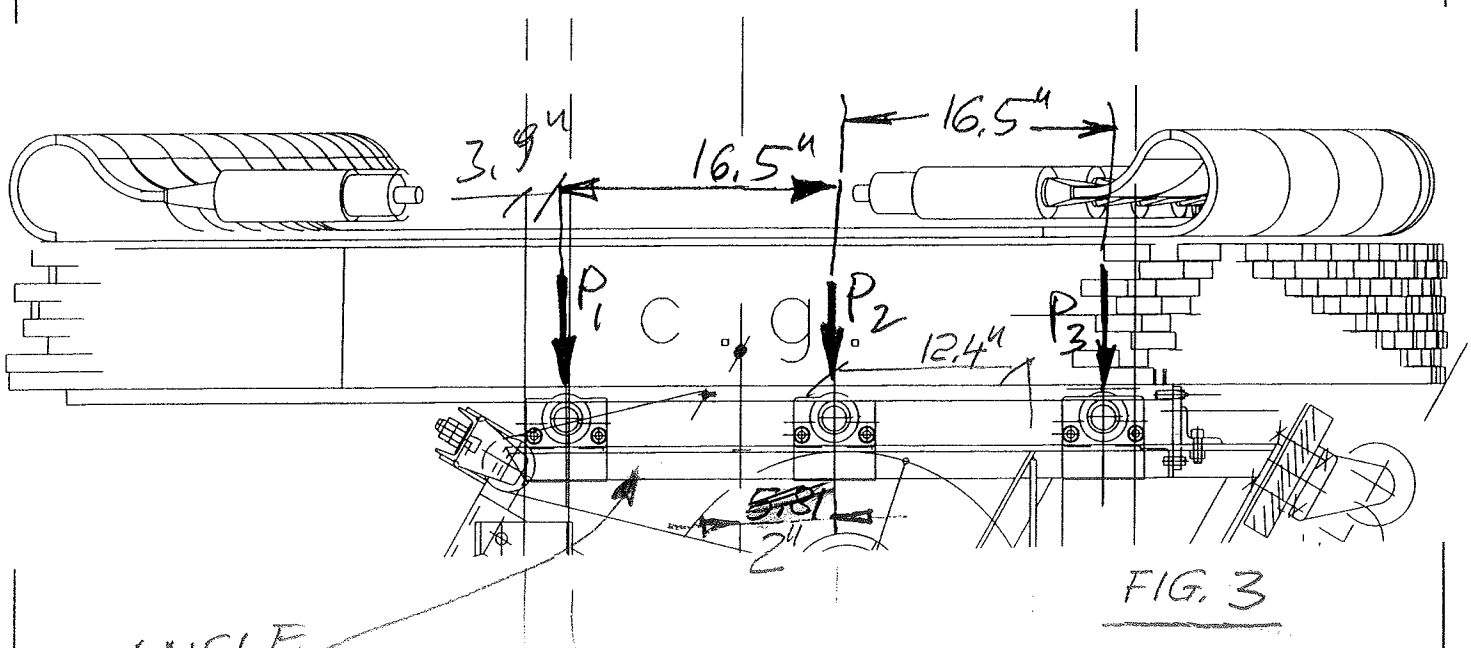

FIG. 3

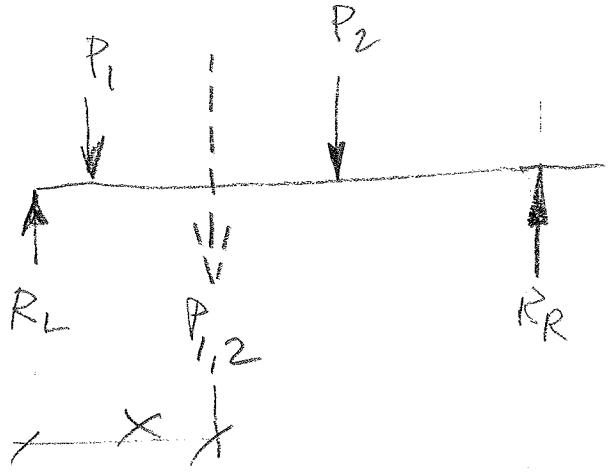

$$P_{1,2} = P_1 + P_2$$

$$P_{1,2} = \underline{1643.4}$$

$$P_1(3.9) + P_2(3.9+16.5) = P_{1,2}(X)$$

$$198(3.9) + 1445.4(3.9+16.5) = 1643.4(X)$$

$$X = \underline{18.41}$$

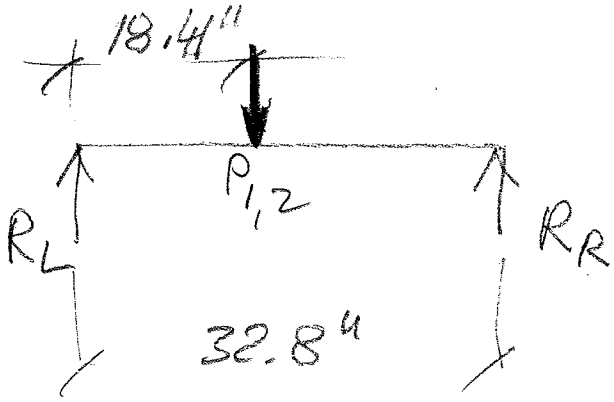

$$M = \frac{P_{1,2}(18.41)}{2}$$

$$M = \underline{15127.5} \ [\text{kin}]$$

$$\tilde{\sigma} = \frac{M}{S}$$

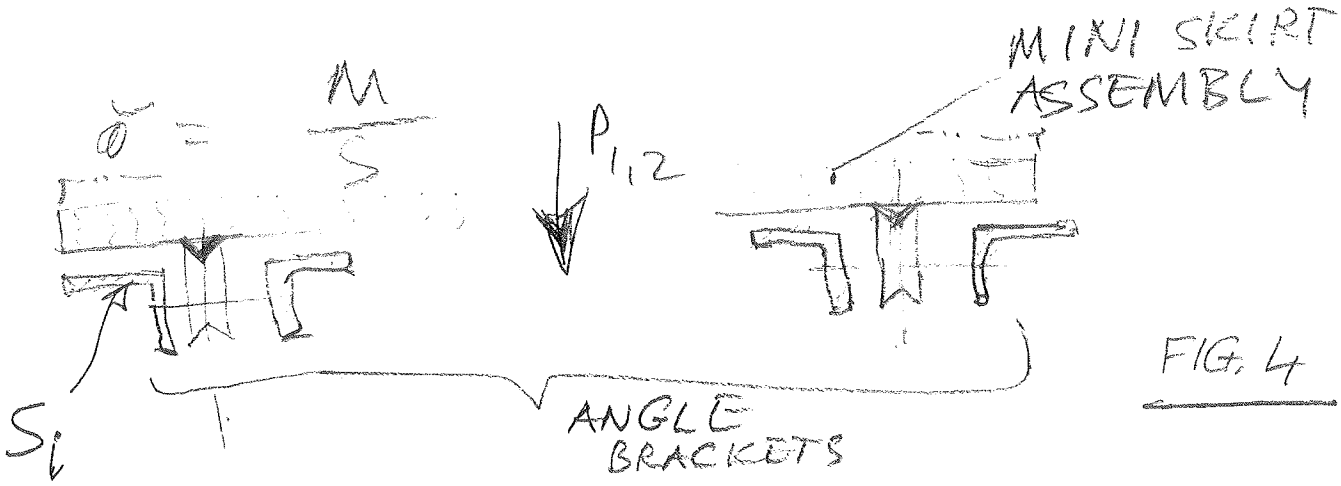

FIG. 4

S_i — SECTION MODULUS OF $2'' \times 2'' \times \frac{3}{8}''$ ANGLE

$$S_i = 0.351 \ in^3$$

$$S = 4(S_i) = 1.404$$

$$\tilde{\sigma} = \frac{15127.5}{1.404} = \underline{10774.5} \ [psi]$$

3. STATIC ANALYSIS — HANDLING

THE GENERAL ARRANGEMENT OF THE "PICK UP" BEAM IS SHOWN IN FIG. 5.

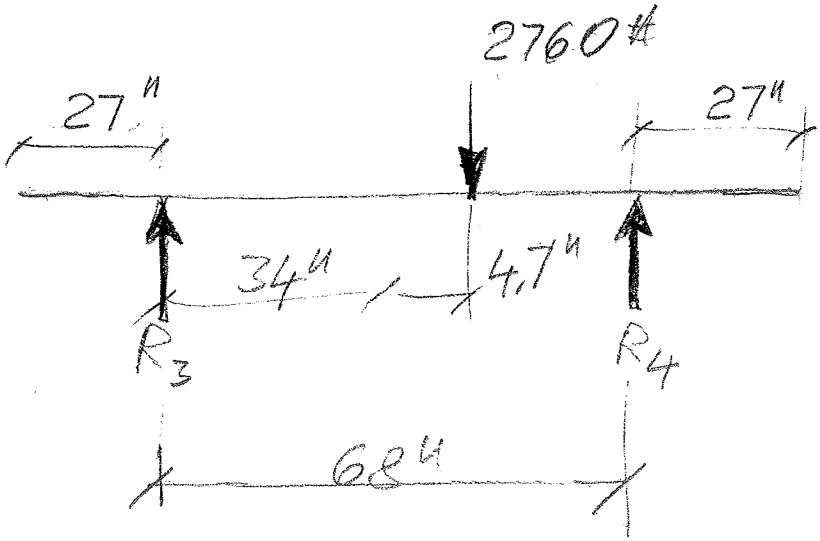

$$\sum F_y = 0$$

$$R_3 + R_4 - 2760 = 0$$

$$\sum M_{(R_3)} = 0$$

$$-2760(38.7) + R_4(68) = 0$$

$$R_4(68) = 2000(38.7)$$

$$R_4 = \underline{1570.7} \text{ [lbs]}$$

$$R_3 = 2760 - 1570.7$$

$$R_3 = \underline{1189.2} \text{ [lbs]}$$

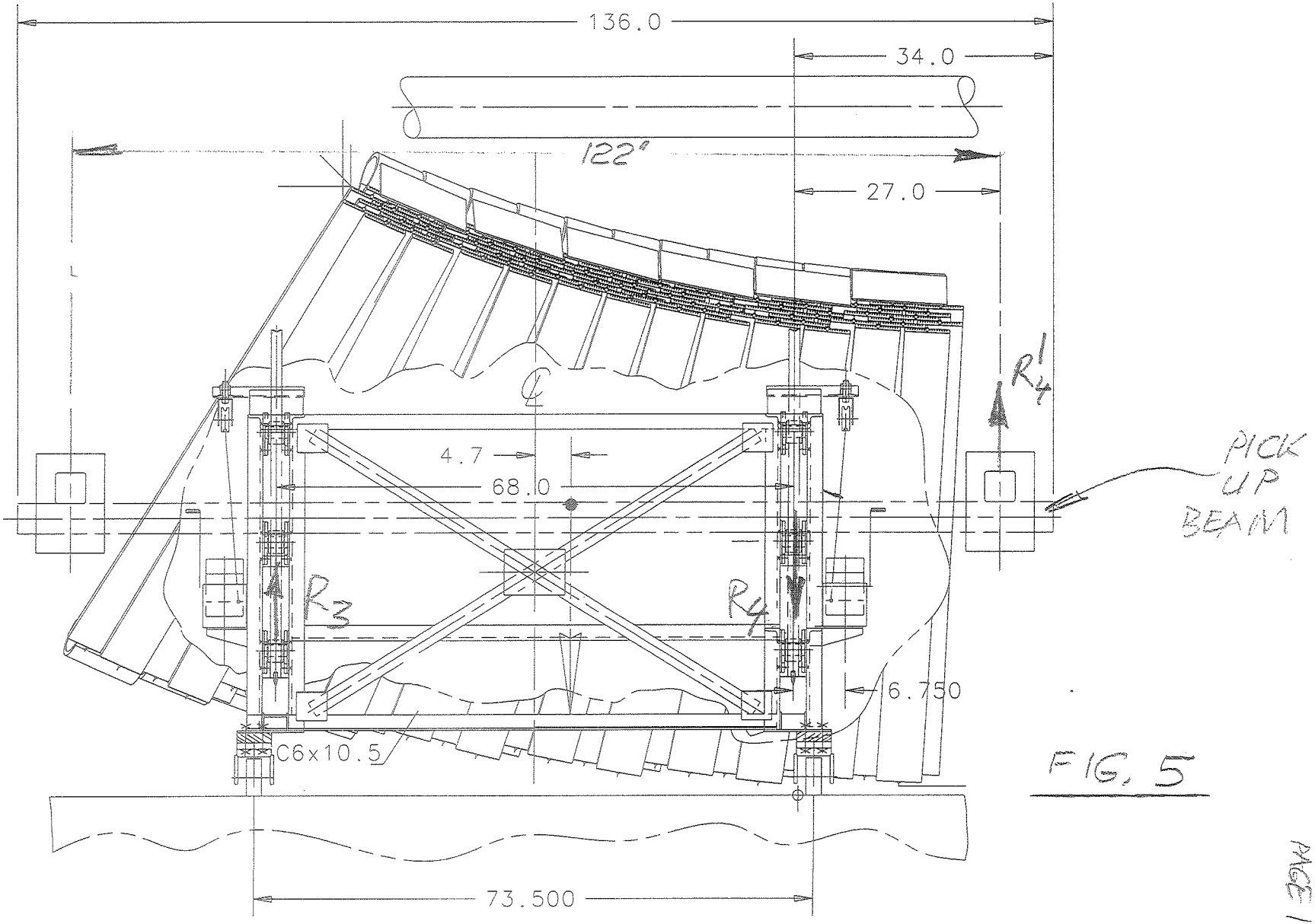

FIG. 5

3.1 FIND BENDING MOMENT AFFECTING "PICK UP" BEAM: (SEE FIG. 5)

$$M_{MAX} = R_4'(27) \qquad R_4' = R_4$$

$$M_{max} = 1570.7(27)$$

$$M_{max} = \underline{42408.9} \quad [\text{lb in}]$$

THE "PICK UP" BEAM GEOMETRY PROPERTIES:
STRUCTURAL TUBING

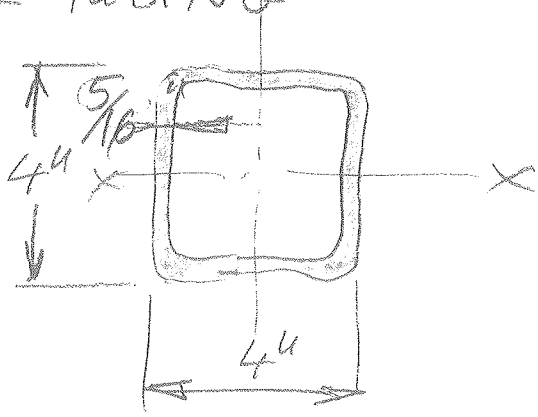

$$S = 4.79 \text{ in}^3$$

WEIGHT PER FOOT: 14.83 lbs

3.2 GOVERNING STRESS

3.2.1 BENDING

$$\sigma = \frac{M_{max}}{S} = \frac{42,408.9}{4.79}$$

$$\sigma = \underline{8,853.6} \quad [\text{psi}]$$

3.3 "PICKING UP" FROM HORIZONTAL POSITION OF THE MINISKIRT.
THE COMPONENTS ARRANGEMENT IS SHOWN IN FIG. 6

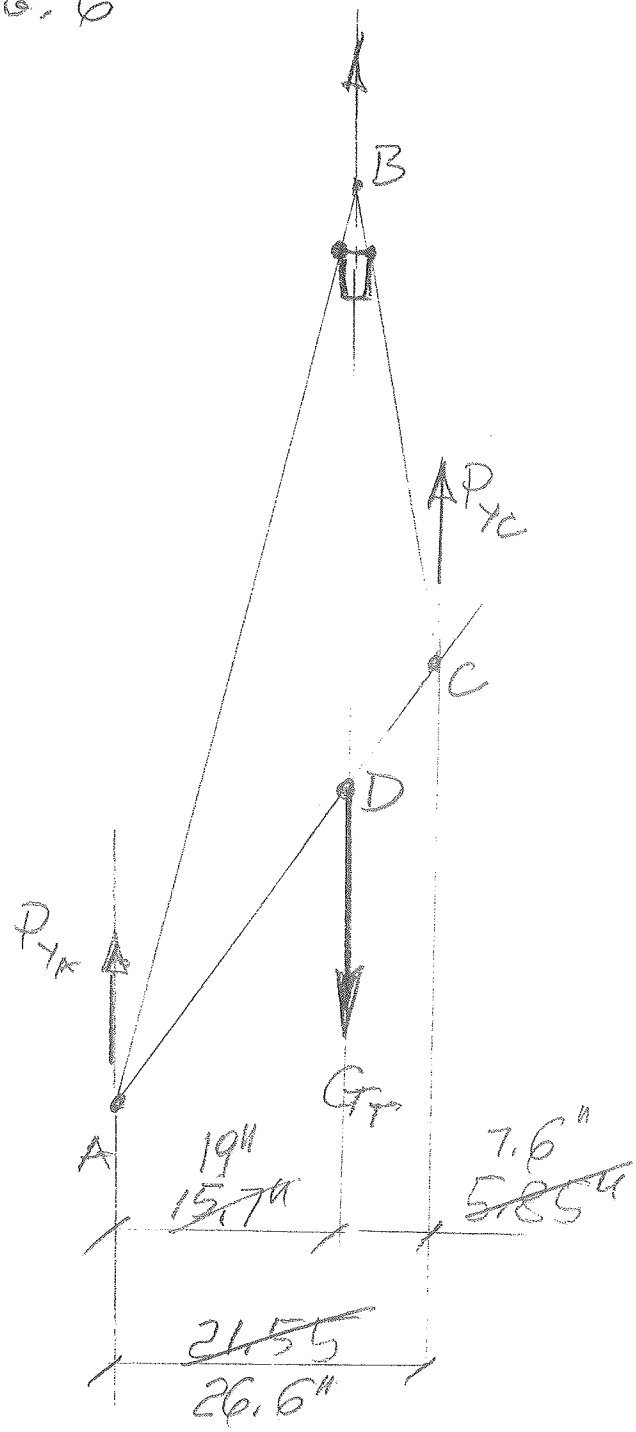

$G_T = 2{,}760$ [lbs]

AC = 52"

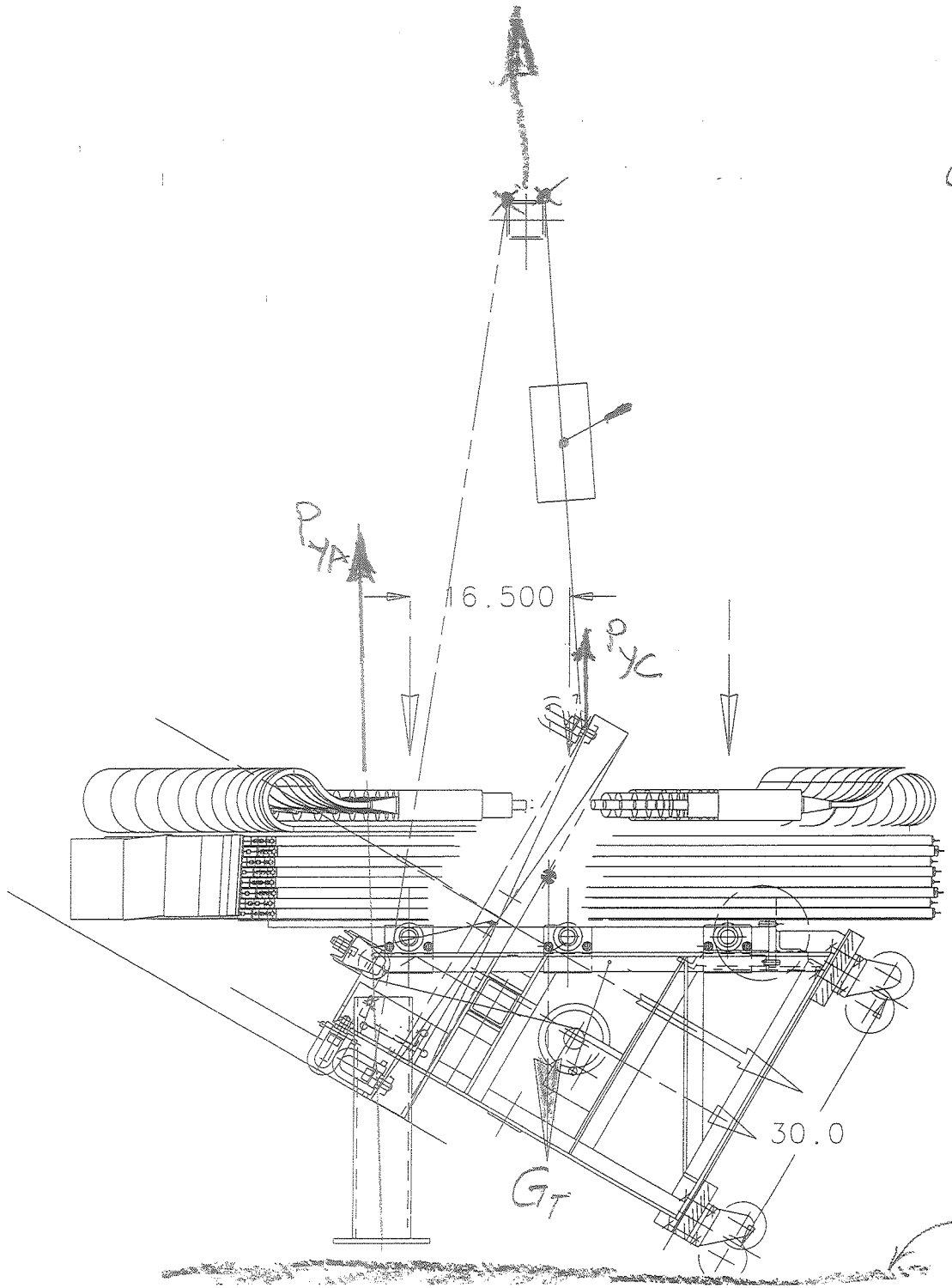

FIG. 6

3.3.1 FIND COMPONENTS

P_{YA} , P_{YC}

$$\frac{P_{YA}}{\cancel{5.85}\ 7.6} = \frac{P_{YC}}{\cancel{15.7}\ 19} = \frac{G_T}{\cancel{21.55}\ 26.6}$$

$$P_{YC}\left(\cancel{21.55}\ 26.6\right) = 2760\left(\cancel{15.7}\ 19\right)$$

$$P_{YC} = \underline{1971.4} \quad [\text{lbs}]$$

$$P_{YA} = 2760 - \cancel{2010.1}\ 1971.4$$

$$P_{YA} = \underline{788.6} \quad [\text{lbs}]$$

3.3.2 FIND COMPONENT P_W

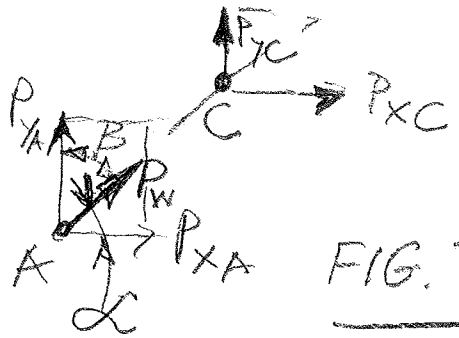

FIG. 7

$\alpha = 60°$
$\beta = 30°$

$$\frac{P_{YA}}{P_W} = \sin\alpha \qquad P_W = \frac{P_{YA}}{\sin\alpha} = \underline{\cancel{865.1}\ 910.6}\ [\text{lbs}]$$

3.3.3 FIND P_W EFFECT ON BOLTED CONNECTION

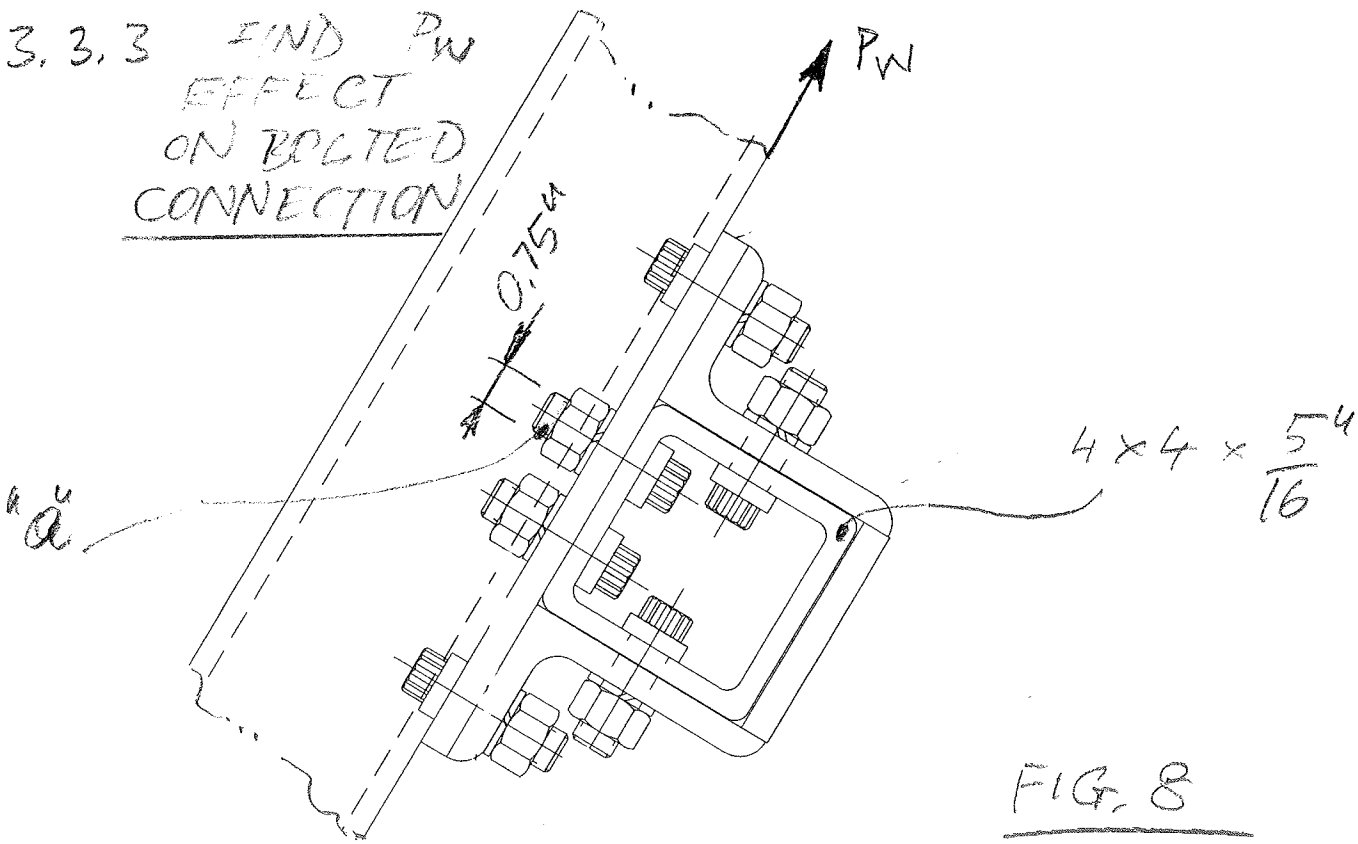

FIG. 8

SHEAR STRESSES IN BOLT "a" AS A RESULT OF P_W COMPONENT WILL HAVE MARGINAL VALUE.

(8) BOLTS WILL BE SUBJECTED TO SHEAR LOAD.

EACH BOLT HAS A SHEAR CROSS SECTION AREA OF 0.44 in^2

THE QUANTITY OF BOLTS IS DICTATED BY THE FACTOR OF SAFETY WHICH IS HIGH, ASSUMING COMPLEXITY OF HANDLING / MANIPULATION OF THE UNIT.

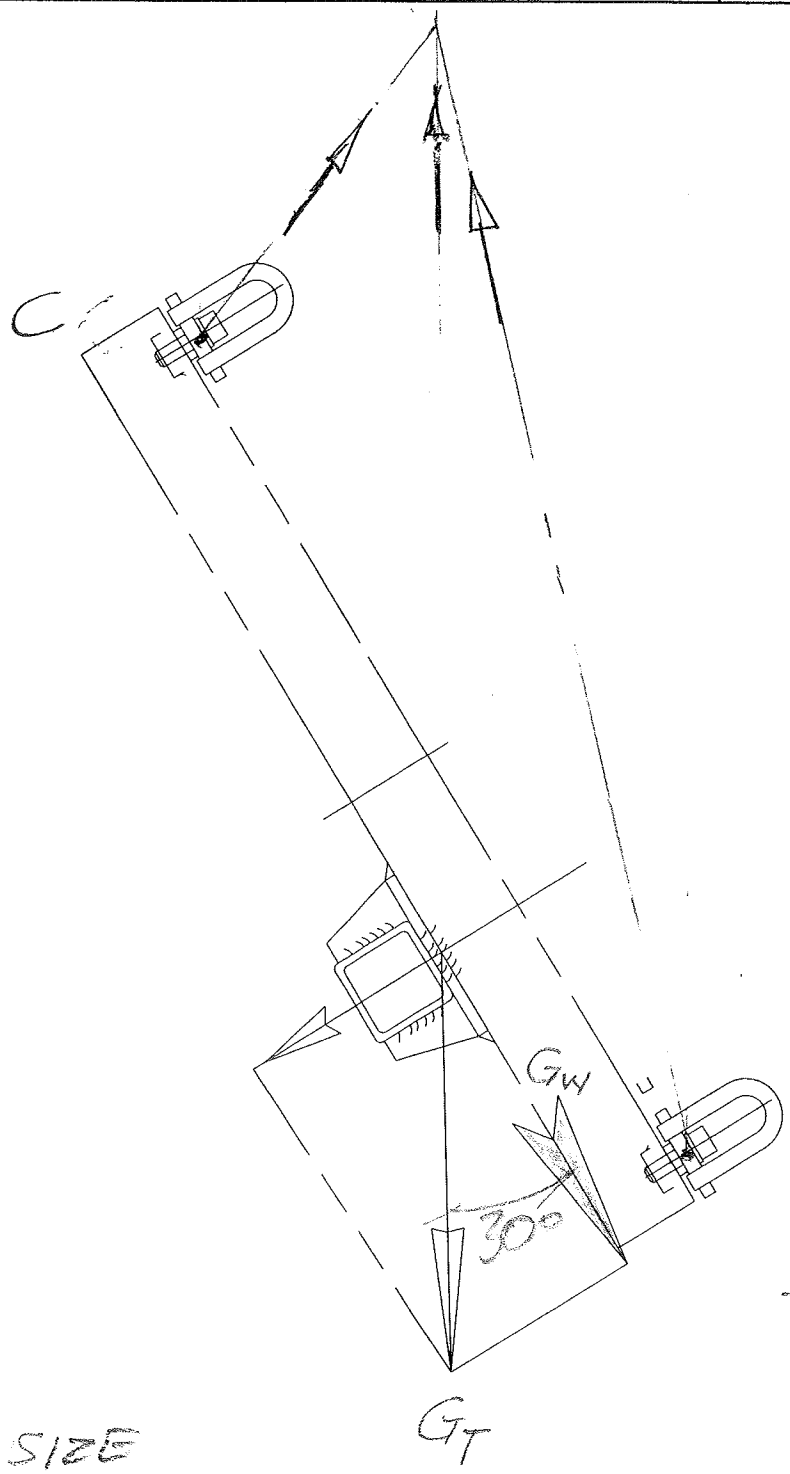

FIG 4

3.3.4 SIZE

THE WELDMENT AFFECTED BY FORCE G_W

$G_T = 2760$ [lbs]

$\frac{G_W}{G_T} = \cos 30°$ $G_W = 2390$ [lbs]

FERMILAB
ENGINEERING NOTE

SECTION	PROJECT	SERIAL-CATEGORY	PAGE
			30

SUBJECT

NAME

DATE

REVISION DATE

WELDMENT SCHEMATIC

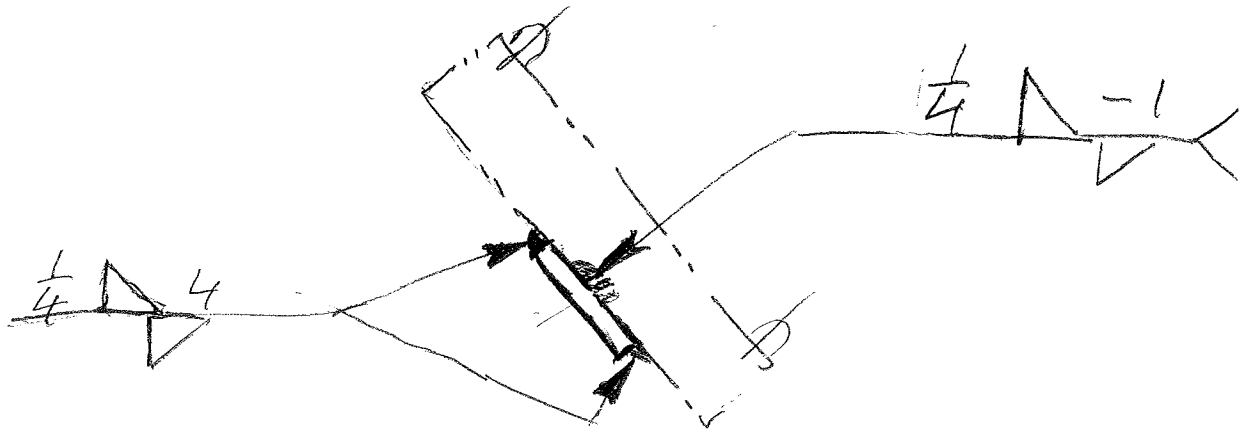

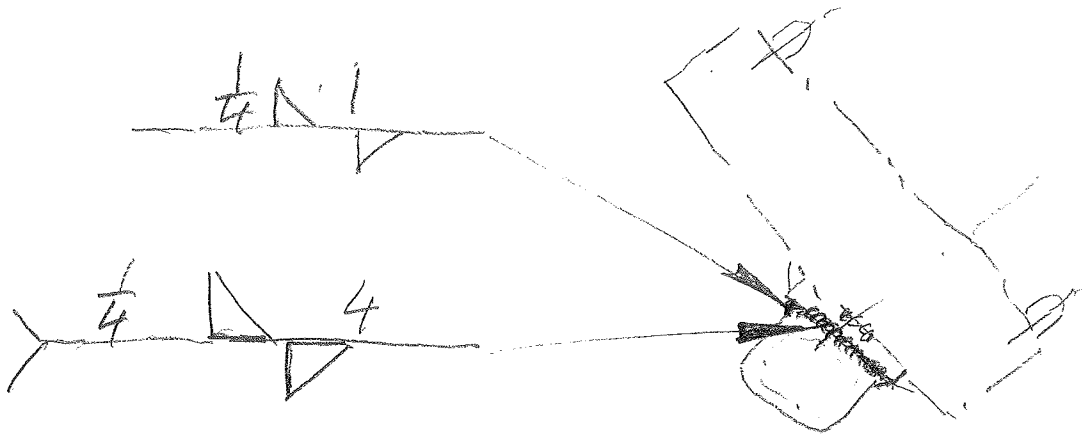

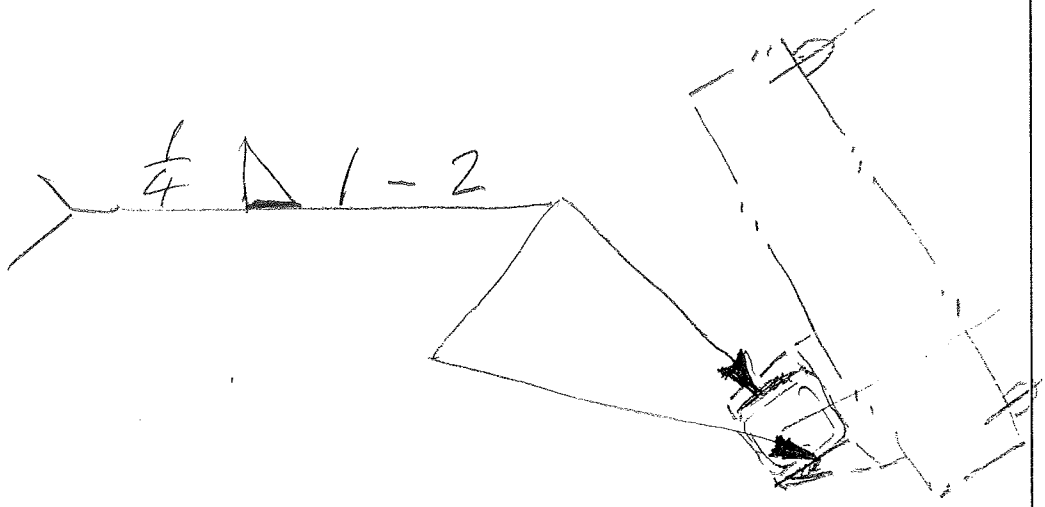

For weld proportions used in practice, this variation may be neglected. In a parallel weld, the maximum shear stress is across the throat of the weld where the area is $0.707t$. Hence the shear stress on the side of the weld is 0.707 times $s_{s\,max}$, and the permissible load per linear inch is $0.707t$ times 11,500, or $8{,}130t$ lb. This is the same capacity as that found for a normal weld. However, when the external forces are not collinear, there will be bending in the weld and the permissible load should be reduced 20 per cent to $6{,}400t$. This value has been used in computing the values in Table 28.

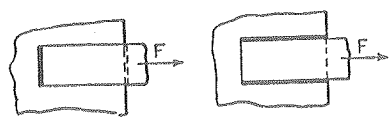

Normal fillet welds (a) Parallel Fillet Welds (b)

FIG. 88.

TABLE 28.—ALLOWABLE LOADS ON MILD-STEEL FILLET WELDS

Size of weld, in.	Allowable static load per linear inch of weld, lb			
	Bare welding rod		Shielded arc	
	Normal weld	Parallel weld	Normal weld	Parallel weld
$\frac{1}{8}$ by $\frac{1}{8}$	1,000	800	1,250	1,000
$\frac{3}{16}$ by $\frac{3}{16}$	1,500	1,200	1,875	1,500
$\frac{1}{4}$ by $\frac{1}{4}$	2,000	1,600	2,500	2,000
$\frac{5}{16}$ by $\frac{5}{16}$	2,500	2,000	3,125	2,500
$\frac{3}{8}$ by $\frac{3}{8}$	3,000	2,400	3,750	3,000
$\frac{1}{2}$ by $\frac{1}{2}$	4,000	3,200	5,000	4,000
$\frac{5}{8}$ by $\frac{5}{8}$	5,000	4,000	6,250	5,000
$\frac{3}{4}$ by $\frac{3}{4}$	6,000	4,800	7,500	6,000

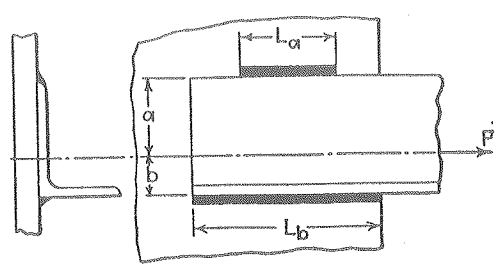

FIG. 89.

138. Eccentric Loads. With axial loads on unsymmetrical sections such as angles, or channels welded on the flange edges, the weld lengths should be proprotioned so that the sum of the resisting moments of the welds about the gravity axis is zero. In Fig. 89, let L be the total weld

3.4 DETERMINE THE LOAD EFFECT ON THE STRUCTURAL MEMBERS OF THE TRANSPORT CART, SEE FIG. 10, 11

3.4.1 FIND THE VALUE OF MOMENT "T" (FIG 12)

$$T = G_T (X_c) \qquad \text{(FIG. 10)}$$

X_c IS A DISTANCE FROM THE ℄ OF SQUARE TUBING TO C.g OF COMBINE LOAD.

3.24.2 FIND THE X_c

TABULATION OF STRUCTURAL ELEMENTS WEIGHTS AND DISTANCES FROM POINT "A" SEE FIG 11.

TABLE 1

G_1 = 83.8 [lbs]	L_1 = 20.12"	G_{10} = 30 lbs	L_{10} = 8.9"
G_2 = 36.5	L_2 = 19.6		
G_3 = 52.4	L_3 = 1.9"		
G_4 = 73.6	L_4 = 11"		
G_5 = 11.9	L_5 = 13.9"		
G_6 = 63.8	L_6 = 1.5		
G_7 = 53.6	L_7 = 1.11		
G_8 = 22	L_8 = 22.4		
G_9 = 22	L_9 = 37.4		

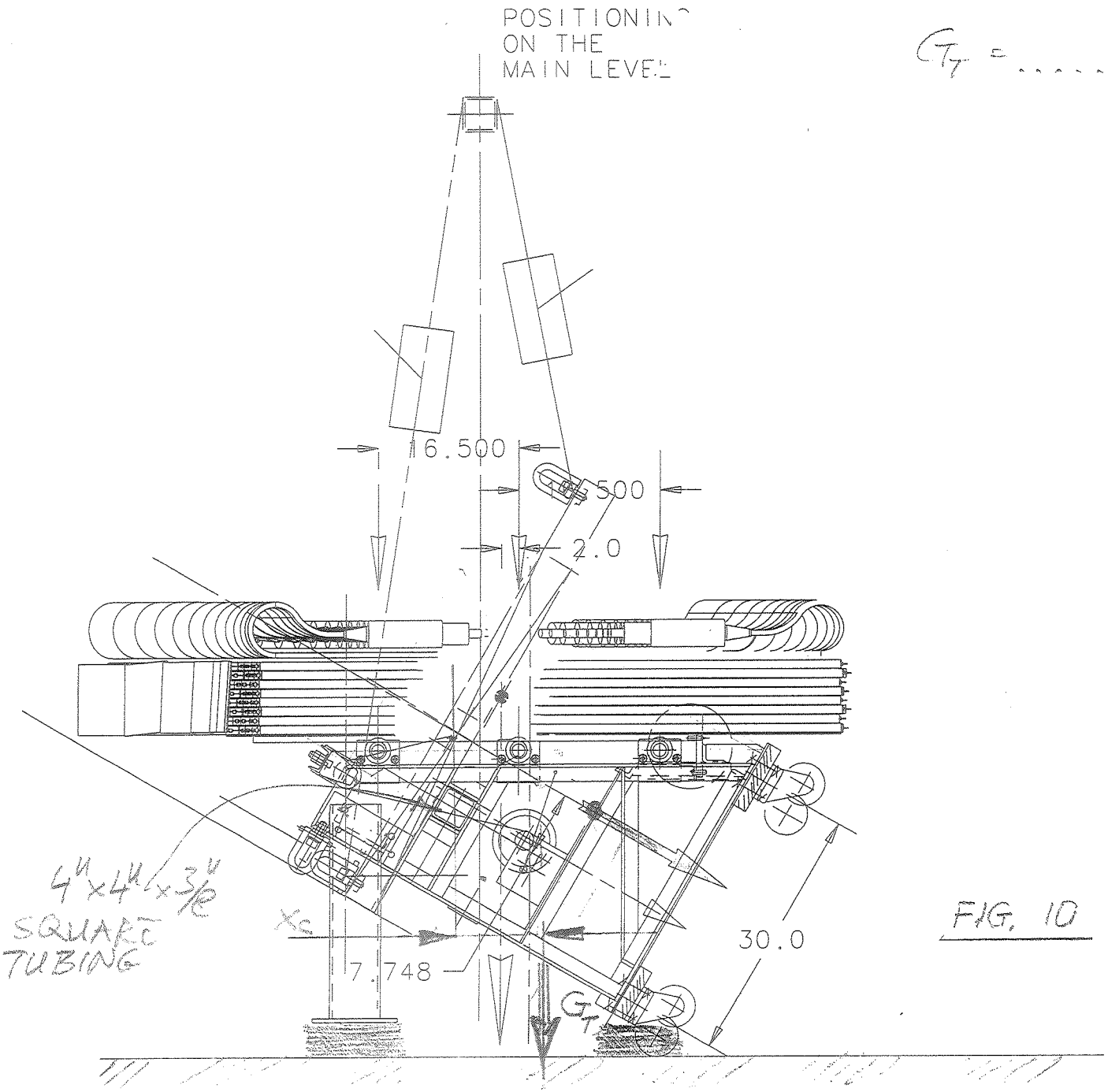
POSITIONING
ON THE
MAIN LEVEL
16.500
.500
2.0
4"x4"x3/16"
SQUARE
TUBING
X_c
7.748
30.0
G_T

G_T = ... [lbs]

FIG. 10

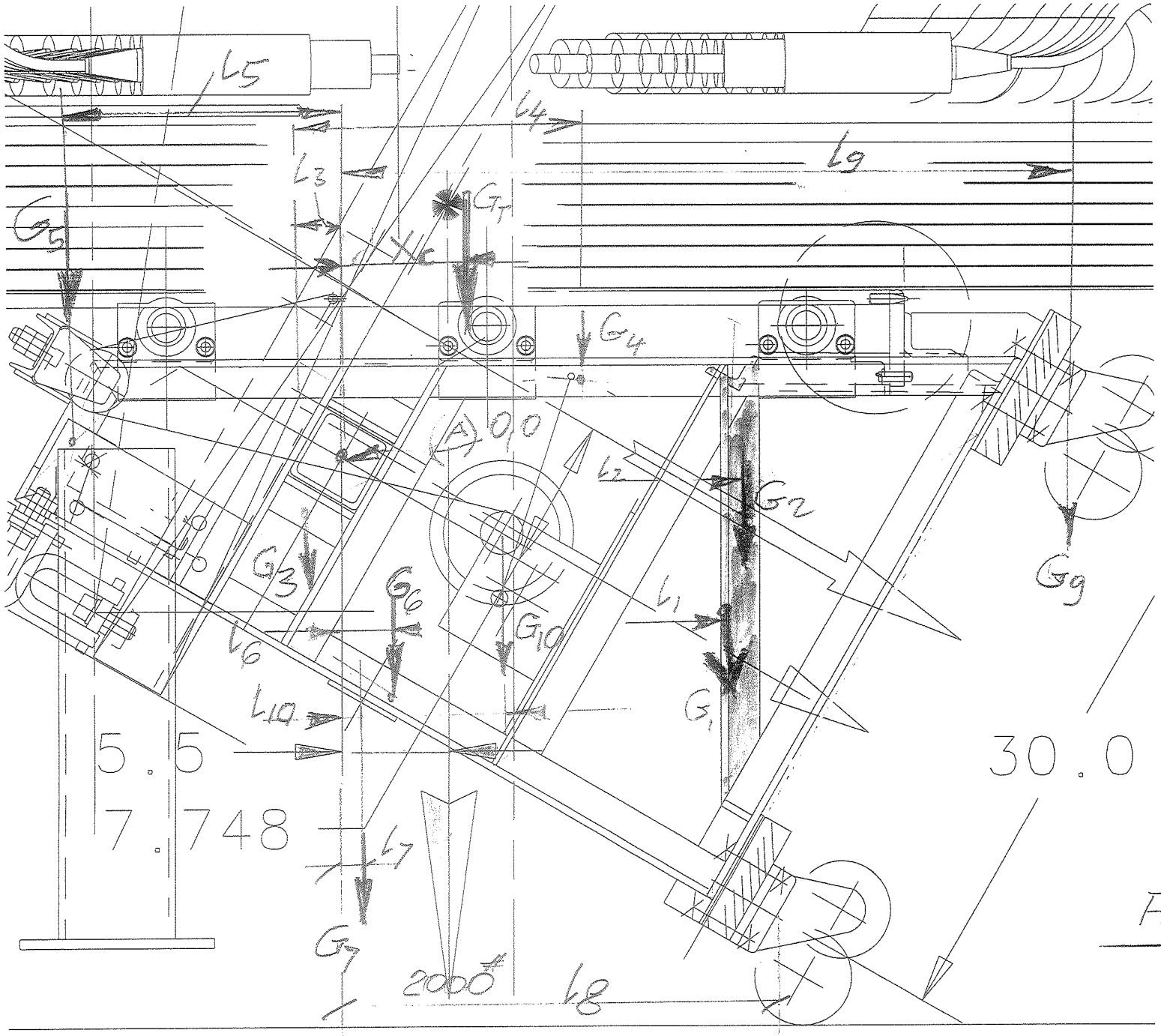

FIG. 11

G_1, G_2, G_3, G_4, G_5, G_6
G_7 WEIGHT OF THE STRUCTURAL MEMBERS (L 2×2×3/6)

G_8, G_9
WEIGHT OF THE CASTERS

$$G_T = \sum_{i=1}^{9} G_i + 2000$$

$\sum G_i$ (SEE TABLE 1)

$$\sum G_i = 450 \text{ [lbs]}$$

$$2450(x_c) = \sum G_i (l_i)$$

$\sum G_i (l_i)$

		2000 (5.5)	= -11,000
	G_1	83.8 (20.12)	= -1686.05
	G_2	36.5 (19.6)	- 715.4
(-)	G_3	52.4 (1.9)	+ 99.56
	G_4	73.6 (11)	- 809.6
(-)	G_5	11.9 (13.9)	+ 165.41
	G_6	63.8 (1.5)	- 95.7
	G_7	53.6 (1.11)	- 59.49
	G_8	22 (22.4)	- 429.8
	G_9	22 (37.4)	- 822.8
			$\sum = 15{,}353.9$ [lb in]

$G_T = 2450$ [lbs]

$$x_c = \frac{15{,}353.9}{2450}$$

$$x_c = \underline{6.26''}$$

3.4.2 TORSIONAL STRESS IN 4" x 4" x 0.375" 130" LONG TUBING

SEE FIG. 12.

$$\tau = \frac{t\,(T)}{R}$$

τ
t
T
R

SEE PAGE 28 FOR SYMBOLS EXPLANATION

$t = 0.375''$

$T = (G_T)(x_c)$

$T = 2450\,(6.26)$

$T = \underline{15{,}337.}$ [lb in]

THE TORSIONAL RESISTANCE OF THE SQUARE TUBING SECTION

$$R = \frac{2tb^2d^2}{b+d}$$

$b = 4''$
$d = 4''$
$t = 0.375''$

$$R = \frac{2(0.375)(4)^2(4)^2}{4+4} = 24\ [in^4]$$

FIG. 12

REF [1] "DESIGN OF WELDMENTS" BY O.W. BLODGETT p 28

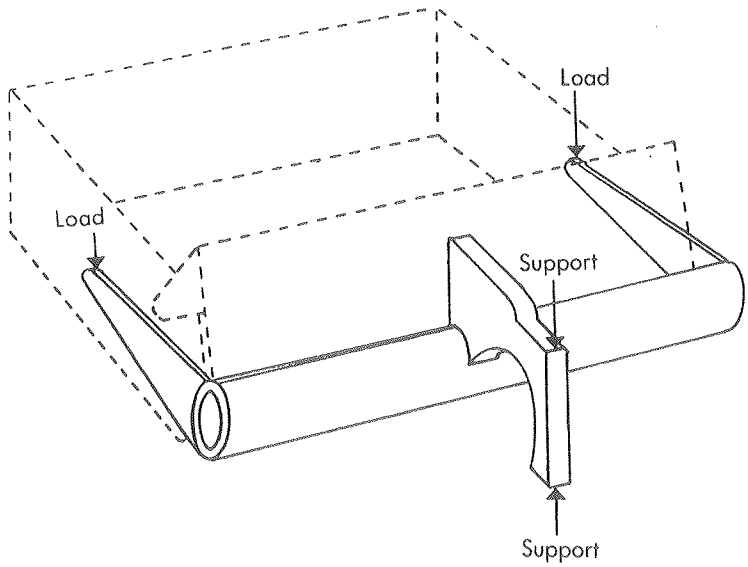

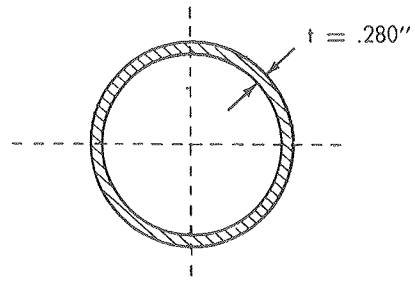

OD = 6.625″
ID = 6.065″
Mean radius (r_m) = 3.1725″
I = 28.14 in^4

FIGURE 11

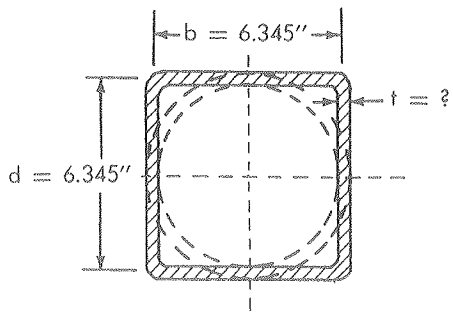

FIGURE 12

The torsional resistance of the pipe, treated as a line, (see Sect. 2.3, Table 6), is--

$$R_{pipe} = 2\,t\,\pi\,r_m^3$$
$$= 2(.280)\,\pi\,(3.1725)^3$$
$$= 56.18 \text{ in.}^4$$

If the appropriate formula from Table 1 is used, the answer obtained will be nearly the same:

$$R_{pipe} = .0982\,(d_2^4 - d_1^4)$$
$$= .0982\,(1926.39 - 1353.08)$$
$$= 56.30 \text{ in.}^4$$

The actual value from a steel handbook is --

$$R_{pipe} = J = I_x + I_y$$
$$= 28.14 + 28.14$$
$$= 56.28 \text{ in.}^4$$

The torsional resistance of the box section, also treated as a line, is --

$$R_{box} = \frac{2\,t\,b^2\,d^2}{b + d}$$
$$= \frac{2\,t\,(6.345)^2\,(6.345)^2}{6.345 + 6.345} = t\,(6.345)^3$$
$$= R_{pipe} = 56.18 \text{ in.}^4$$

$$\therefore\quad t\,(6.345)^3 = 56.18 \text{ in.}^4$$

$$\text{and } t = \frac{56.18}{(6.345)^3}$$
$$= .22'' \text{ or use } \tfrac{1}{4}''\ \text{PL}$$

5. MAXIMUM SHEAR STRESS IN BUILT-UP SECTIONS

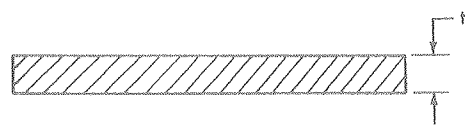

FIGURE 13

The maximum shear stress of a rectangular section in torsion lies on the surface at the center of the long side.

For the maximum shear stress on a narrow rectangular section or section element--

$$\tau = \phi\,t\,E_s = \frac{T\,t}{R}$$

where:

ϕ = unit angular twist of whole section (each element twists this amount), in radians/linear inch of member

t = thickness of rectangular section

R = torsional resistance of entire member, not necessarily just this one flat element

This formula can be used for a flat plate, or the flat plate of a built-up section not forming a closed section (i.e. channel, angle, T- or I-beam section).

In such a built-up open section, the unit angular

OF WELDMENT

BLODGETT

REF. [2] P. 29

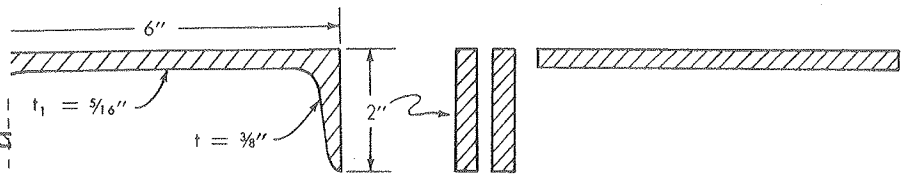

FIGURE 15

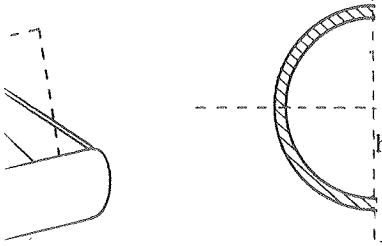

hole member is first found:

OD = m shear stress in the specific

ID =

Mean radius end to concentrate at re-entrant se, the maximum stress value

I = 28s--

11 ner radius.

∴ $t\,(6.345)^3 = 56.18$ in.^{4}

and $t = \dfrac{56.18}{(6.345)^3}$

$= .22''$ or use ¼″ PL

14

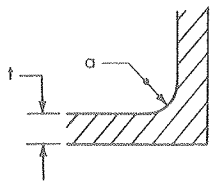

MAXIMUM SHEAR STRES
ECTIONS

-lb channel is subjected to a in.-lbs. Find the shear stress igure 15.

FIGURE 1

ula for rectangular sections from al resistance of each of the two iden- R_1) and of the 6″ × 5/16″ web (R_2):

The maximum shear str section in torsion lies on the of the long side.

For the maximum shear rectangular section or sectio 586

$$\tau = \phi\, t\, E_s = \frac{T\,t}{R}$$

where:

ϕ = unit angular twist of wh twists this amount), in member

t = thickness of rectangul

R = torsional resistance c necessarily just thi

This formula can be used plate of a built-up section section (i.e. channel, angle, T

In such a built-up open se

IGURE 16

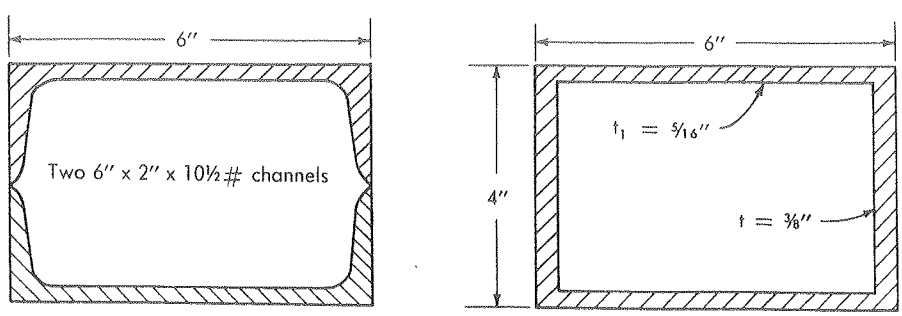

Problem 5

Two 6″ × 2″ × 10½-lb channels are welded toe to toe, to form a short box section. This is subjected to a torque of T = 100,000 in.-lbs. Find the horizontal shear stress at the toes and the amount of groove welding required to hold these channels together for this torsional load. See Figure 16.

From Table 1, the shear stress at mid-length of the short side is found to be--

$$\tau = \frac{T}{2t\,(b - t)(d - t_1)}$$

$$= \frac{100,000}{2\,(.375)\,(6 - .375)\,(4 - .3125)}$$

$$= 6420 \text{ psi}$$

The horizontal shear force is then - -

$$f = \tau t$$

$$= 6420 \times .375$$

$$= 2410 \text{ lbs/linear inch}$$

Since weld metal is good for 13,000 psi in shear, the throat or depth of the continuous butt weld must be--

$$f = \tau_{weld}\, t$$

$$2410 = 13,000\, t$$

$$\text{or } t = \frac{2410}{13,000}$$

$$= .185'' \text{ or } 3/16''$$

The groove weld connecting the channels must have a throat depth of at least 3/16″. Of course, if the torsional load is applied suddenly as an impact load, it would be good practice to add a safety factor to the computed load. This would then necessitate a deeper throat for the butt weld.

$$\tau = \frac{0.375\,(15{,}337)}{24}$$

$$\tau = \underline{240} \quad [psi]$$

3.4.3 DETERMINE THE MAGNITUDE OF FORCE R_T (FIG. 12) AND DERIVATIVE STRESSES

$$R_T(2) = T$$

$$R_T = \frac{15337}{2}$$

$$R_T = \underline{7{,}668.5} \quad [\text{lbs}]$$

SHEAR STRESS IN THE ANGLE

$$\tau = \frac{R_T}{A}$$

A - ANGLE CROSS SECTIONAL AREA

$$\tau = \frac{7668.5}{1.36}$$

$A = 1.36 \text{ in}^2$

$$\tau = \underline{5{,}638.6} \quad [\text{psi}]$$

THIS STRESS WILL TAKE PLACE WHEN ONLY ONE "YOKE" IS IN CONTACT WITH LIFTING 130" LONG TUBING.

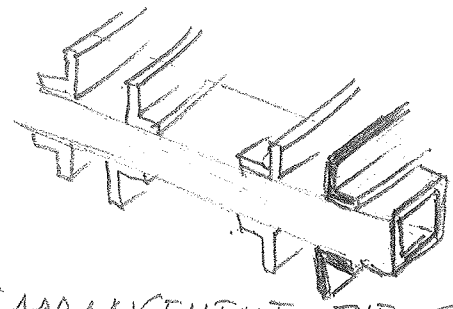

WITH PERFECT ARRANGEMENT THE STRESS WILL BE 4X LOWER.

3.4.4 DETERMINE THE WELD SIZE "a" (FIG. 12)

THE WELD "a" WILL BE SUBJECTED TO SHEAR STRESS CAUSED BY FORCE R_T

$$f = \frac{P}{A_W}$$ REF. [1]

$$P = R_T = 7{,}668.5 \text{ [lbs]}$$

$A_W =$ ASSUMED WELD LENGTH

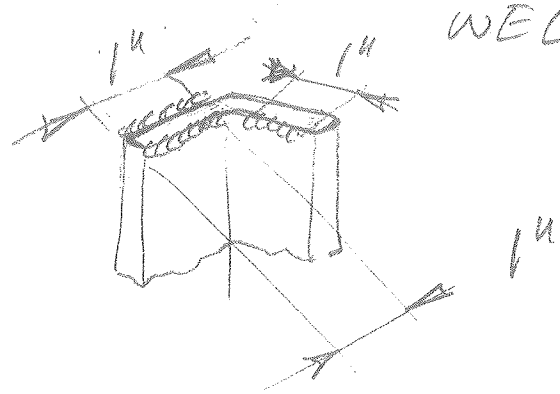

$$A_W = 3''$$

$$f = \frac{7668.5}{3}$$

$$f = 2556.2 \quad [\text{lb/lin inch}]$$

$$f = \frac{8800\,\omega}{1 - \frac{K}{2}}$$

REF [5]

$$2556 = \frac{8800\,\omega}{1 - 0}$$

$$K = \frac{MIN}{MAX}$$

WHEN CART IS IN STANDING POSITION } → MIN. STRESS = 0
MAX STRESS = 2556

$K = 0$

$$2556 = 8800\,\omega$$

$$\omega = \underline{0.29}$$

THIS REPRESENTS THE LEG SIZE OF ONE $2 \times 2 \times \frac{3}{8}''$ ANGLE

ACTUAL NUMBER OF ANGLES IS 4, THEREFORE APPLYING $\frac{1}{4}''$ FILLET WELD WILL BE ADEQUATE AND SAFE

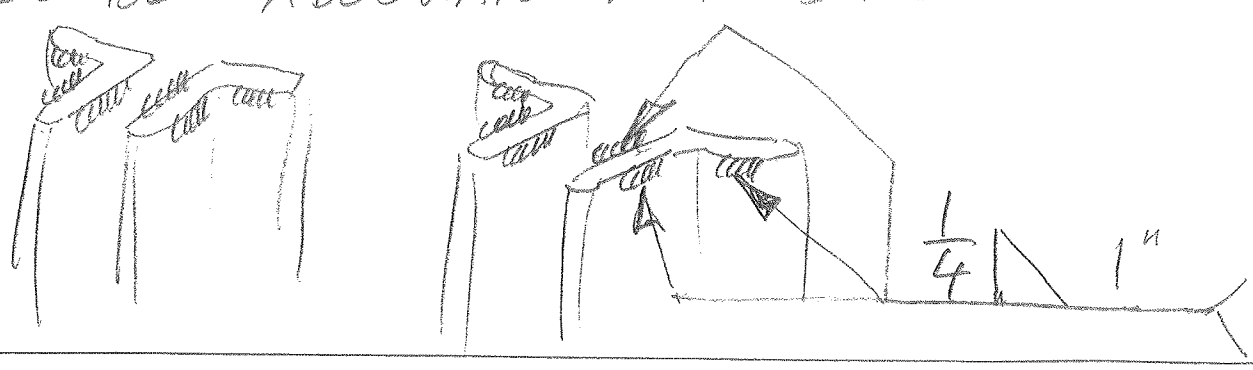

REF. [3]

TABLE 2 - MINIMUM WELD SIZES FOR THICK PLATES (AWS)

THICKNESS OF THICKER PLATE JOINED t	MINIMUM LEG SIZE OF FILLET WELD ω
to 1/2" incl.	3/16"
over 1/2" thru 3/4"	1/4"
over 3/4" thru 1 1/2"	5/16"
over 1 1/2" thru 2 1/4"	3/8"
over 2 1/4" thru 6"	1/2"
over 6"	5/8"

Minimum leg size need not exceed thickness of the thinner plate.

Table 1 gives the leg size of fillet welds for various plate thicknesses, based on formulas #1 and #2. Values have been adjusted where necessary to comply with AWS-recommended minimums for thick plates (Table 2).

For rigidity designs, the fillet weld may be reduced by using intermittent welds.

Thick Plates

The American Welding Society recognizes that thick plates offer greater restraint, and produce a faster cooling rate for the welds. As a result they recommend the minimum fillet weld sizes in Table 2 for various plate thicknesses, based on the thicker plate.

This table is predicated on the theory that the required minimum weld size will provide sufficient welding heat input into the plate to give the desired slow rate of cooling.

This is not a complete answer to this problem; for example, a plate thicker than 6" would require a minimum weld size of ⅝", yet in actual practice this would be made in several passes. Each pass would be equivalent to about a 5/16" fillet, and have the heat input of approximately a 5/16" weld which may not be sufficient unless the plates are preheated.

A partial solution to this problem would be the following: Since the first pass of the joint is the most critical, it should be made with low-hydrogen electrodes and a rather slow travel speed. Resulting superior weld physicals, weld contour, and maximum heat input provide a good strong root bead.

3. TYPES OF WELDS

a. Primary welds transfer the entire load at the particular point where they are located. If the weld fails, the member fails. The weld must have the same property as the member at this point. In brief, the weld becomes the member at this point.

b. Secondary welds simply hold the parts together, thus forming the member. In most cas the forces on these welds are low.

c. Parallel welds have forces applied para to their axis. In the case of fillet welds, the thr is stressed only in shear. For an equal-leg fillet, the maximum shear stress occurs on the throat.

d. Transverse welds have forces applied tra versely or at right angles to their axis. In case of fillet welds, the throat is stressed in b shear and normal (in tension or compressio For an equal-legged fillet weld, the maximum she stress occurs on the 67½° throat, and the maxim normal stress occurs on the 22½° throat.

4. SIMPLE TENSILE, COMPRESSIVE OR SHEAR LOADS ON WELDS

For a simple tensile, compressive or shear loa the given load is divided by the length of the weld arrive at the applied unit force, lbs per linear in of weld. From this force, the proper leg size fillet weld or throat of groove weld may be foun

5. BENDING OR TWISTING LOADS ON WELDS

The problem here is to determine the propert of the welded connection in order to check the stres in the weld without first knowing its leg size. Som design texts suggest assuming a certain weld-le size and then calculating the stress in the weld t see if it is overstressed or understressed. If th result is too far off, then the weld-leg size i readjusted.

TABLE 3 - DETERMINING FORCE ON WELD

Type of Loading		standard design formula stress lbs/in²	treating the weld as a line force lbs/in
	PRIMARY WELDS transmit entire load at this point		
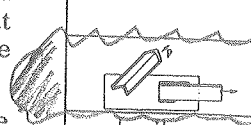	tension or compression	$\sigma = \frac{P}{A}$	$f = \frac{P}{A_w}$
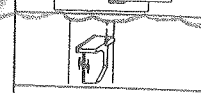	vertical shear	$\sigma = \frac{V}{A}$	$f = \frac{V}{A_w}$
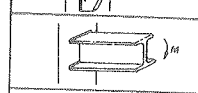	bending	$\sigma = \frac{M}{S}$	$f = \frac{M}{S_w}$
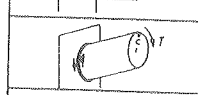	twisting	$\tau = \frac{TC}{J}$	$f = \frac{TC}{J_w}$
	SECONDARY WELDS hold section together - low stress		
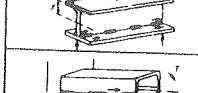	horizontal shear	$\tau = \frac{Vay}{It}$	$f = \frac{Vay}{In}$
	torsional horizontal shear	$\tau = \frac{T}{2At}$	$f = \frac{T}{2A}$

A = area contained within median line.
(*) applies to closed tubular section only.

This has the following disadvantages:

1. Some decision must be made as to what throat section is going to be used to determine the property of the weld. Usually some objection can be raised to any throat section chosen.

2. The resulting stresses must be combined and, for several types of loading, this can be rather complicated.

In contrast, the following is a simple method to determine the correct amount of welding required for adequate strength. This is a method in which the weld is treated as a line, having no area, but a definite length and outline. This method has the following advantages:

1. It is not necessary to consider throat areas because only a line is considered.

2. Properties of the welded connection are easily found from a table without knowing weld-leg size.

3. Forces are considered on a unit length of weld instead of stresses, thus eliminating the knotty problem of combining stresses.

4. It is true that the stress distribution within a fillet weld is complex, due to eccentricity of the applied force, shape of the fillet, notch effect of the root, etc.; however, these same conditions exist in the actual fillet welds tested and have been recorded as a unit force per unit length of weld.

6. DETERMINING FORCE ON WELD

Visualize the welded connection as a single line, having the same outline as the connection, but no cross-sectional area. Notice, Figure 1, that the area (A_w) of the welded connection now becomes just the ~~length of the~~ weld.

Instead of trying to determine the stress on the weld (this cannot be done unless the weld size is known), the problem becomes a much simpler one

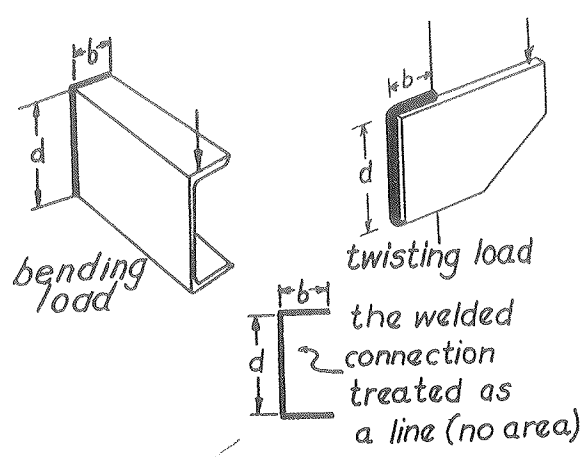

Fig. 1 Treating weld as a line.

TABLE 4 - PROPERTIES OF WELD TREATED AS LINE

Outline of Welded Joint b=width d=depth	Bending (about horizontal axis x-x)	Twisting
	$S_w = \frac{d^2}{6}$ in.^{2}	$J_w = \frac{d^3}{12}$ in.^{3}
	$S_w = \frac{d^2}{3}$	$J_w = \frac{d(3b^2+d^2)}{6}$
	$S_w = bd$	$J_w = \frac{b^3+3bd^2}{6}$
$I_x = \frac{b^3}{2(b+d)}$, $I_y = \frac{d^3}{2(b+d)}$	$S_w = \frac{4bd+d^2}{6}$ top, $= \frac{d^2(4b+d)}{6(2b+d)}$ bottom	$J_w = \frac{(b+d)^4 - 6b^2d^2}{12(b+d)}$
$I_y = \frac{b^3}{2b+d}$	$S_w = bd + \frac{d^2}{6}$	$J_w = \frac{(2b+d)^3}{12} - \frac{b^2(b+d)^2}{(2b+d)}$
$I_x = \frac{d^3}{b+2d}$	$S_w = \frac{2bd+d^2}{3}$ top, $= \frac{d^2(2b+d)}{3(b+d)}$ bottom	$J_w = \frac{(b+2d)^3}{12} - \frac{d^2(b+d)^2}{(b+2d)}$
	$S_w = bd + \frac{d^2}{3}$	$J_w = \frac{(b+d)^3}{6}$
$I_y = \frac{d^3}{b+2d}$	$S_w = \frac{2bd+d^2}{3}$ top, $= \frac{d^2(2b+d)}{3(b+d)}$ bottom	$J_w = \frac{(b+2d)^3}{12} - \frac{d^2(b+d)^2}{(b+2d)}$
$I_y = \frac{d^3}{2(b+d)}$	$S_w = \frac{4bd+d^2}{3}$ top, $= \frac{4bd^2+d^3}{6b+3d}$ bottom	$J_w = \frac{d^3(4b+d)}{6(b+d)} + \frac{b^3}{6}$
	$S_w = bd + \frac{d^2}{3}$	$J_w = \frac{b^3+3bd^2+d^3}{6}$
	$S_w = 2bd + \frac{d^2}{3}$	$J_w = \frac{2b^3+6bd^2+d^3}{6}$
	$S_w = \frac{\pi d^2}{4}$	$J_w = \frac{\pi d^3}{4}$
	$I_w = \frac{\pi d}{2}\left(D^2 + \frac{d^2}{2}\right)$, $S_w = \frac{I_w}{c}$, where $c = \frac{\sqrt{D^2+d^2}}{2}$	

of determining the force on the weld.

By inserting the property of the welded connection treated as a line into the standard design formula used for that particular type of load (see Table 3), the force on the weld may be found in terms of lbs per linear inch of weld.

Example: Bending

Standard design formula (bending stress)	Same formula used for weld (treating weld as a line)
$\sigma = \frac{M}{S} = \frac{\text{lbs}}{\text{in.}^2}$ stress	$f = \frac{M}{S_w} = \frac{\text{lbs}}{\text{in.}}$ force

Normally the use of these standard design formulas results in a unit stress, psi; however, when the weld is treated as a line, these formulas result in a force on the weld, lbs per linear inch.

For secondary welds, the weld is not treated as a line, but standard design formulas are used to find the force on the weld, lbs per linear inch.

In problems involving bending or twisting loads Table 4 is used to determine properties of the weld

blue REF [5] PAGE 36

leveled off and further stress cycles would not produce failure. For any particular specimen and stress cycle there is a relationship between the fatigue strength (σ) and fatigue life (N) in number of cycles before failure. The following empirical formula may be used to convert fatigue strengths from one fatigue life to another:

$$\sigma_a = \sigma_b \left(\frac{N_b}{N_a}\right)^k$$

where:

σ_a = fatigue strength for fatigue life N_a
σ_b = fatigue strength for fatigue life N_b
N_a = fatigue life for fatigue strength σ_a
N_b = fatigue life for fatigue strength σ_b

The constant (k) will vary slightly with the specimen; however, 0.13 has been widely used for butt welds and 0.18 for plate in axial loading (tension and/or compression).

The curve in Figure 7 illustrates the general increase in fatigue life when the applied fatigue stress is reduced. As an example, in this case, reducing the fatigue stress to 75% of its normal value will in general increase the fatigue life about nine times.

Problem 1

Test data indicates a fatigue life of N_a = 1,550,000 cycles when the member is stressed to σ_a = 30,000 psi. What would be the fatigue strength at a life of 2,000,000 cycles?

TABLE 1—Allowable Fatigue Stress
For A7, A373 and A36 Steels and Their Welds

	2,000,000 cycles	600,000 cycles	100,000 cycles	But Not to Exceed
Base Metal In Tension Connected By Fillet Welds But not to exceed →	(1) $\sigma = \frac{7500}{1 - 2/3\,K}$ psi P_t	(3) $\sigma = \frac{10{,}500}{1 - 2/3\,K}$ psi P_t	(5) $\sigma = \frac{15{,}000}{1 - 2/3\,K}$ psi P_t	$\frac{2\,P_c}{3\,K}$ psi
Base Metal Compression Connected By Fillet Welds	(2) $\sigma = \frac{7500}{1 - 2/3\,K}$ psi	(4) $\sigma = \frac{10{,}500}{1 - 2/3\,K}$ psi	(6) $\sigma = \frac{15{,}000}{1 - 2/3\,K}$ psi	P_c psi $\frac{P_c}{1 - \frac{K}{2}}$ psi
Butt Weld In Tension	(7) $\sigma = \frac{16{,}000}{1 - \frac{8}{10}K}$ psi	(11) $\sigma = \frac{17{,}000}{1 - \frac{7}{10}K}$ psi	(15) $\sigma = \frac{18{,}000}{1 - \frac{K}{2}}$ psi	P_t psi
Butt Weld Compression	(8) $\sigma = \frac{18{,}000}{1 - K}$ psi	(12) $\sigma = \frac{18{,}000}{1 - .8K}$ psi	(16) $\sigma = \frac{18{,}000}{1 - \frac{K}{2}}$ psi	P_c psi
Butt Weld In Shear	(9) $\tau = \frac{9{,}000}{1 - \frac{K}{2}}$ psi	(13) $\tau = \frac{10{,}000}{1 - \frac{K}{2}}$ psi	(17) $\tau = \frac{13{,}000}{1 - \frac{K}{2}}$ psi	13,000 psi
Fillet Welds ω = Leg Size	(10) $f = \frac{5100\,\omega}{1 - \frac{K}{2}}$ lb/in.	(14) $f = \frac{7100\,\omega}{1 - \frac{K}{2}}$ lb/in.	(18) $f = \frac{8800\,\omega}{1 - \frac{K}{2}}$ lb/in.	8800 ω lb/in.

Adapted from AWS Bridge Specifications. K = min/max
P_c = Allowable unit compressive stress for member.
P_t = Allowable unit tensile stress for member.

FEF [6]

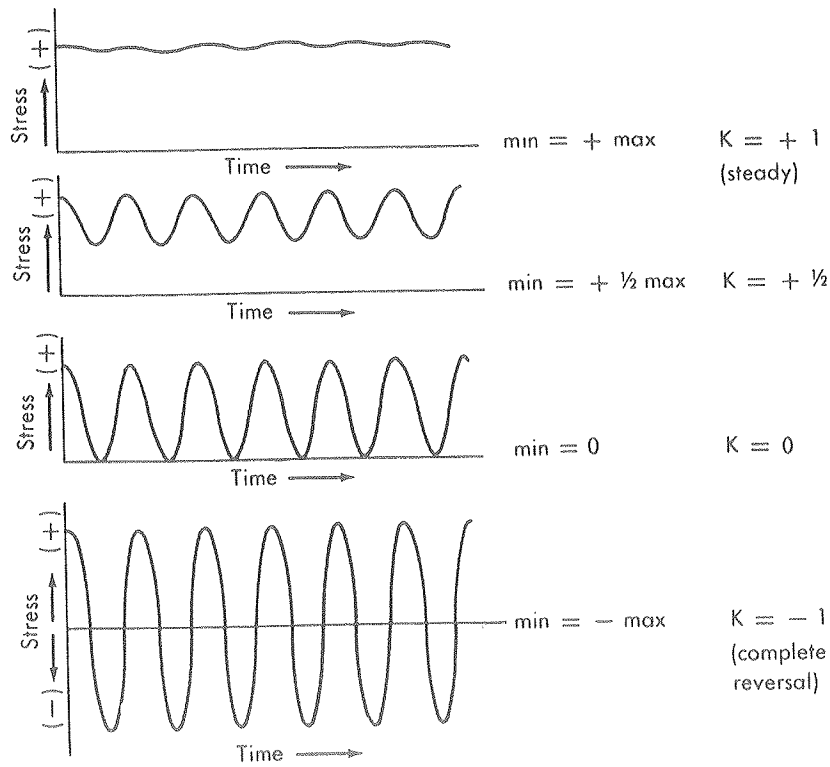

FIGURE 6

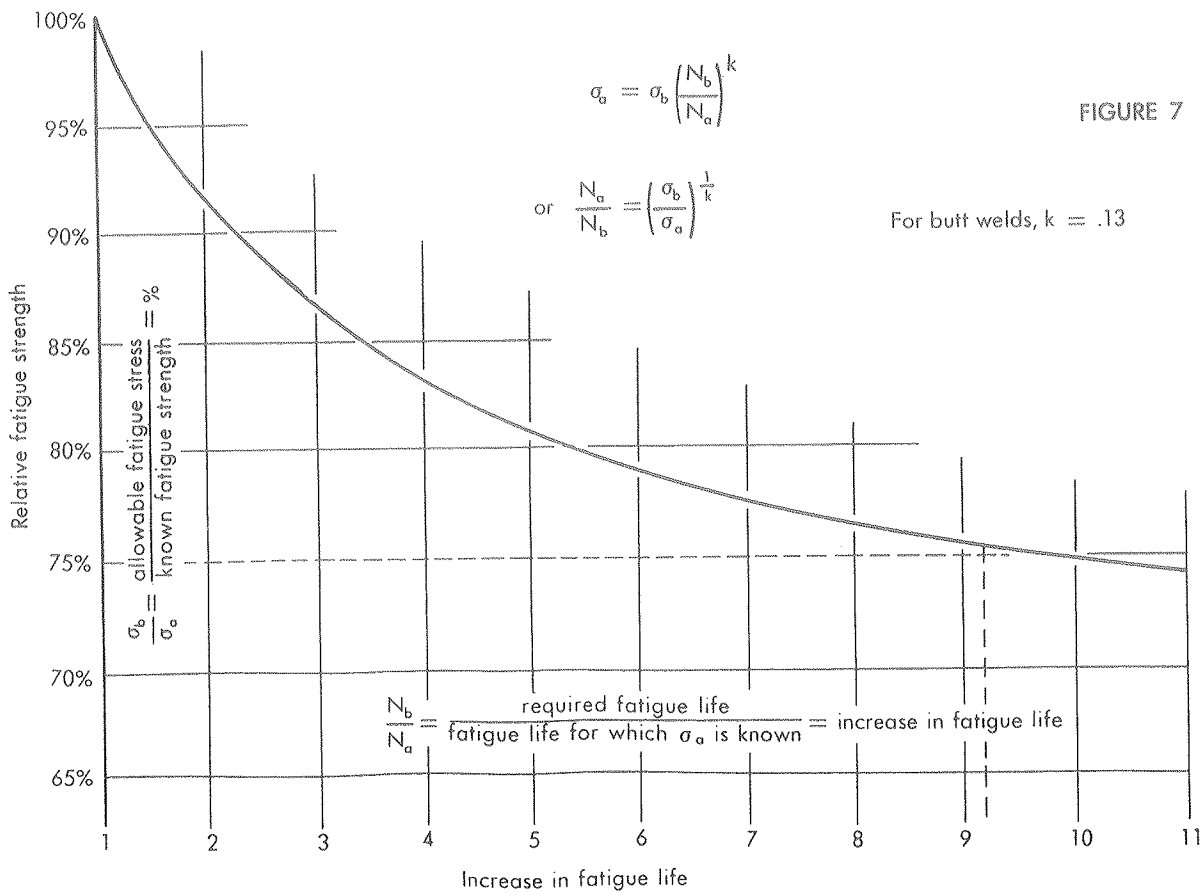

FIGURE 7

3.5 STABILIZING BEAM

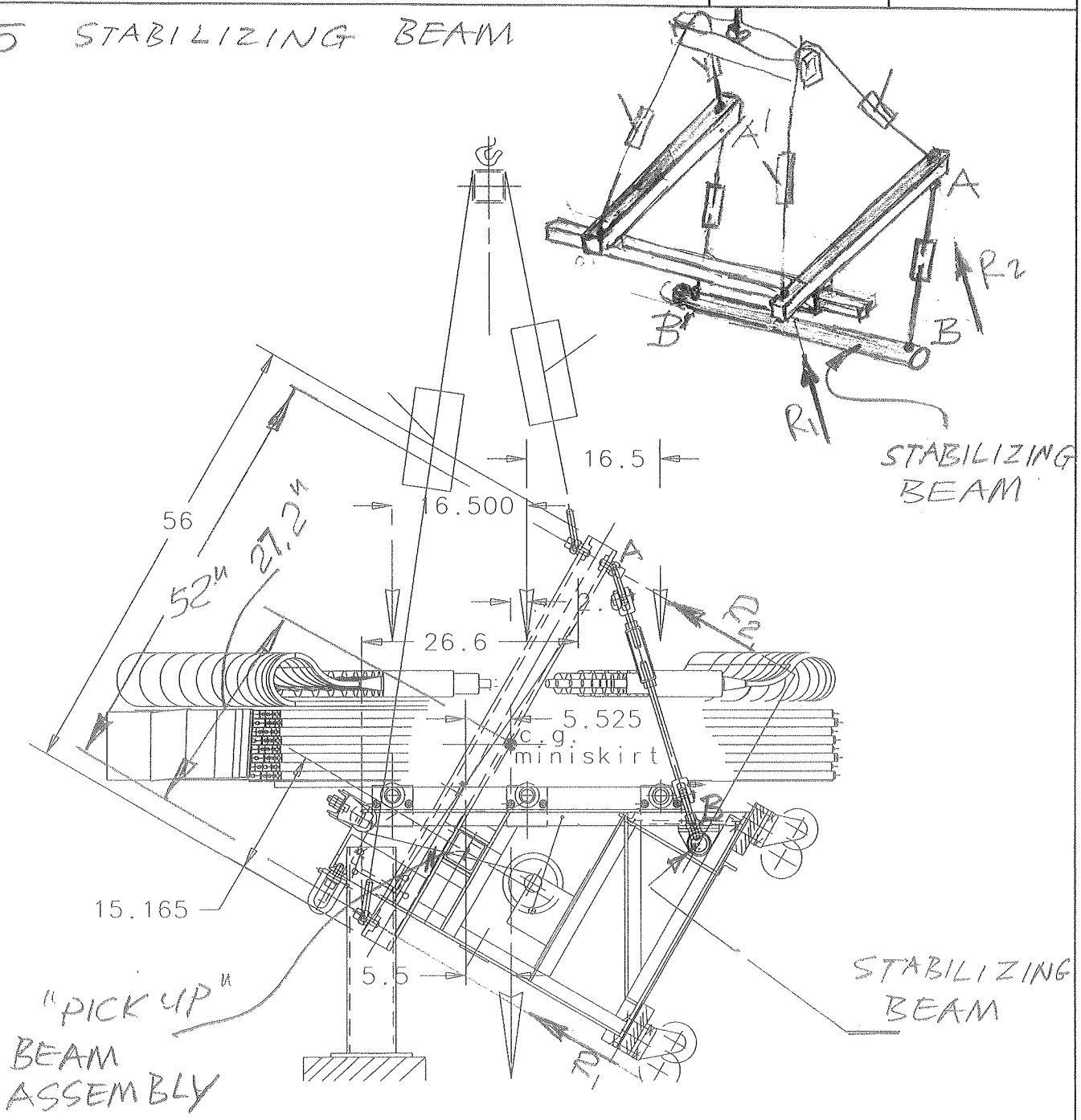

FIG. 13

THE STABILIZING BEAM WILL BE USED DURING UNIT POSITION CHANGE FROM HORIZONTAL TO VERTICAL.

FIG. 13 SHOWS THE MINISKIRT ASSEMBLY ORIENTATION AFTER UNLOADING FROM A TRUCK.

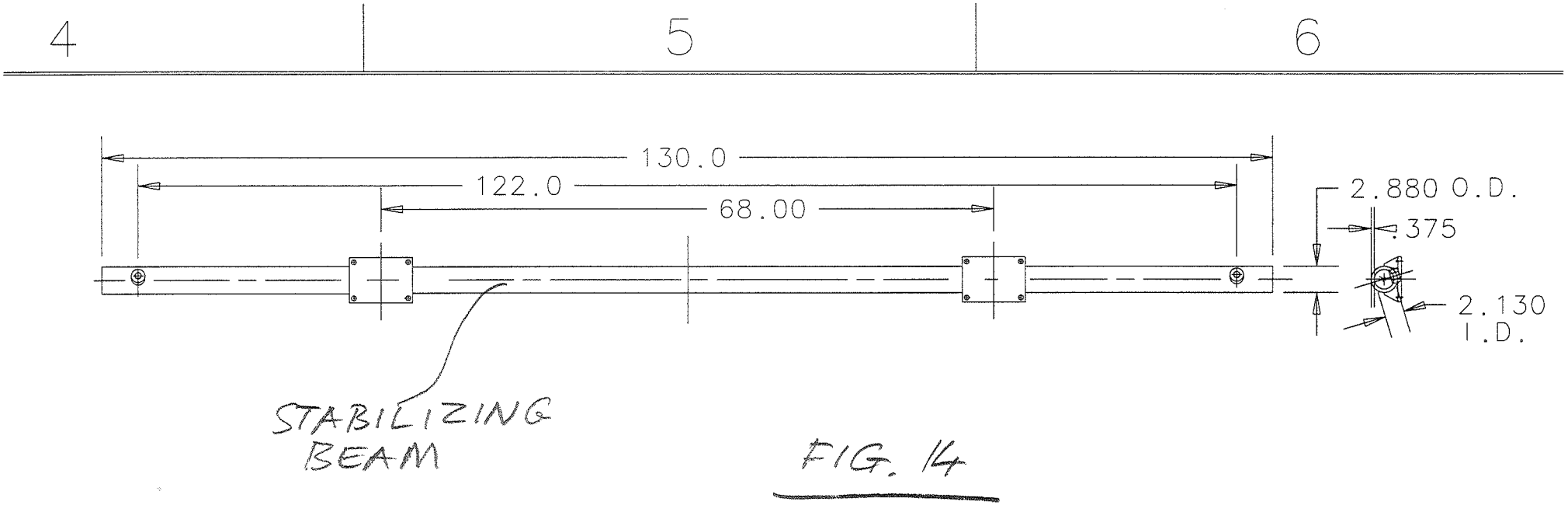

FIG. 14

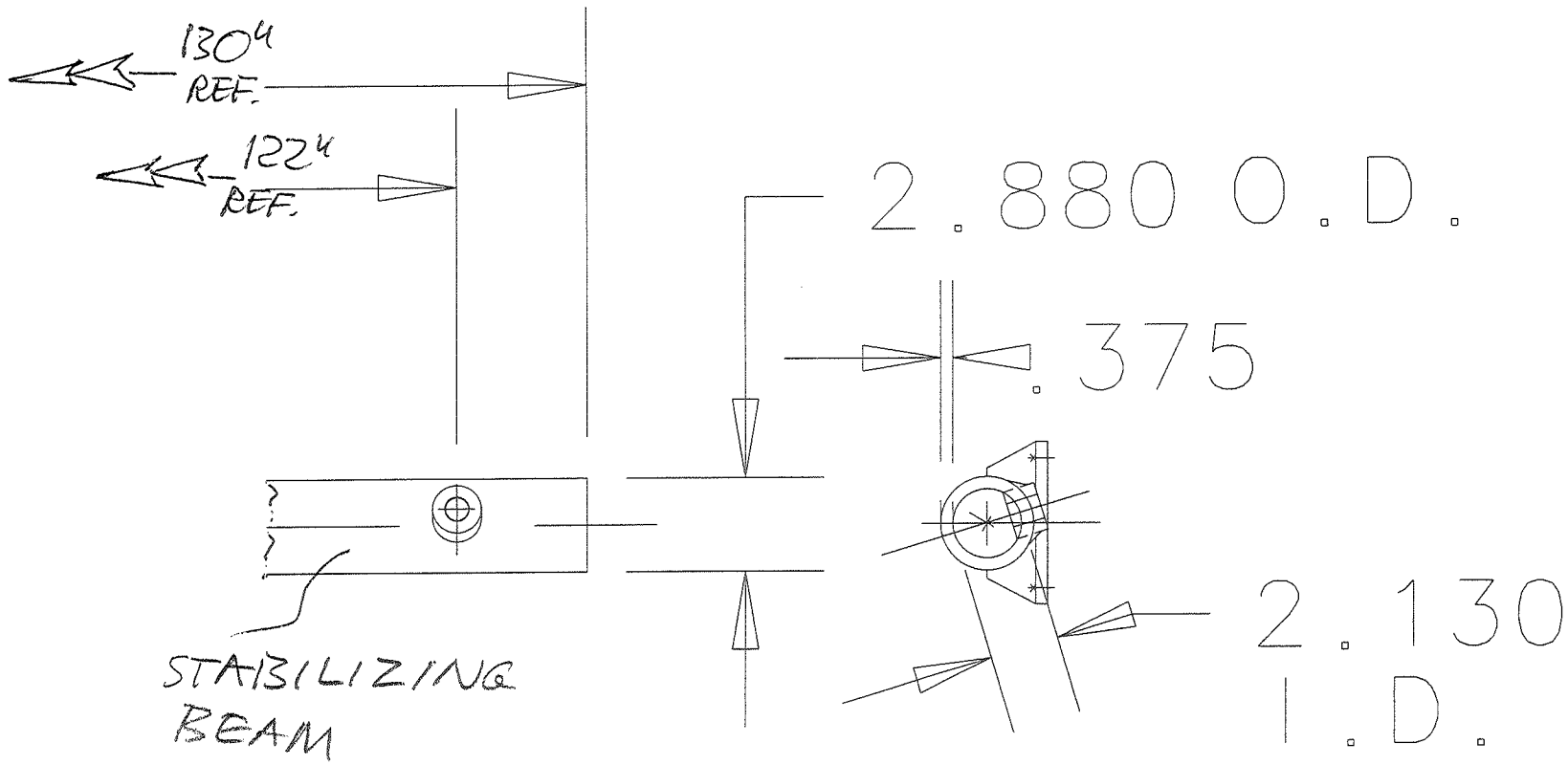

FIG. 15

TURN BUCKLE ASSEMBLIES (A-B, A'B') CONNECT THE "PICK UP" BEAM ASSEMBLY AS SHOWN ON FIG 13.

3.5.1 FIND THE FORCE VALUE AFFECTING CONNECTION (A-B, A'-B')

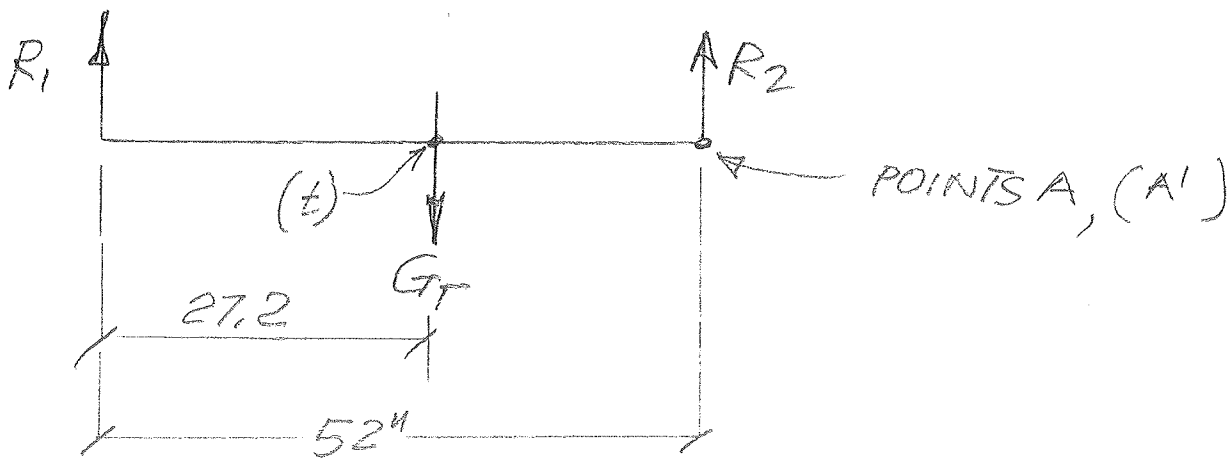

$G_T = 2760$ [lbs]

(1) $\sum P_y = 0$

$R_1 + R_2 - G_T = 0$

$R_1 + R_2 = 2760$

$R_1 = 2760 - R_2$

(2) $\sum M_{(℄)} = 0$

$R_1(27.2) = R_2(24.8)$

$(2760 - R_2)(27.2) = 24.8 R_2$

$75072 - 27.2R_2 = 24.8R_2$

$52R_2 = 75072$

$R_2 = 1443.69$ [lbs]

$R_1 = 2760 - 1443.69$

$R_1 = 1316.3$ [lbs]

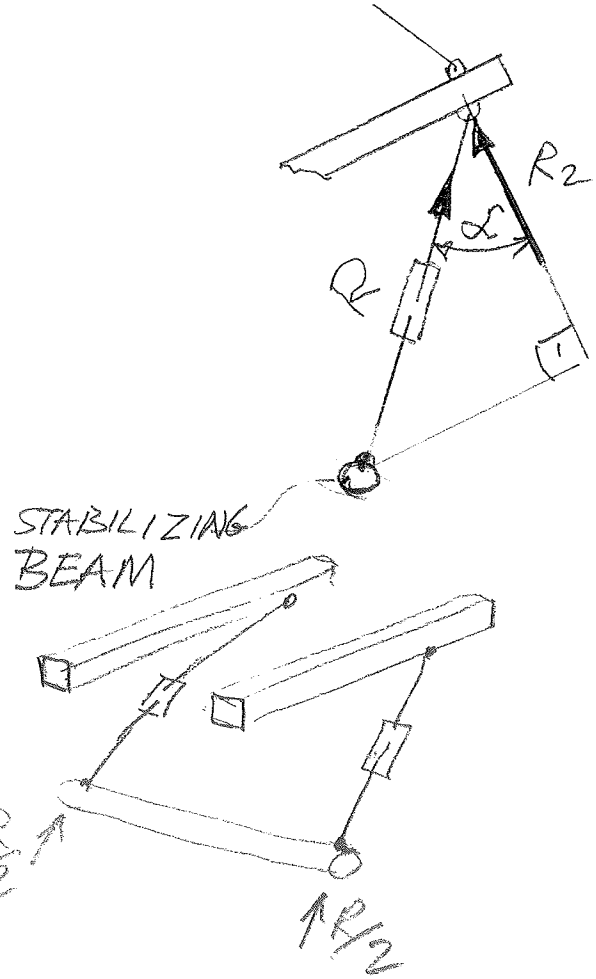

$$\frac{R_2}{R} = \cos\alpha$$

$$\alpha = 42.713^\circ$$

$$R = \frac{R_2}{\cos\alpha}$$

$$R = \frac{1443.69}{\cos 42.713}$$

$$R = 1964.84 \text{ [lbs]}$$

$$\frac{R}{2} = \underline{982.42}$$

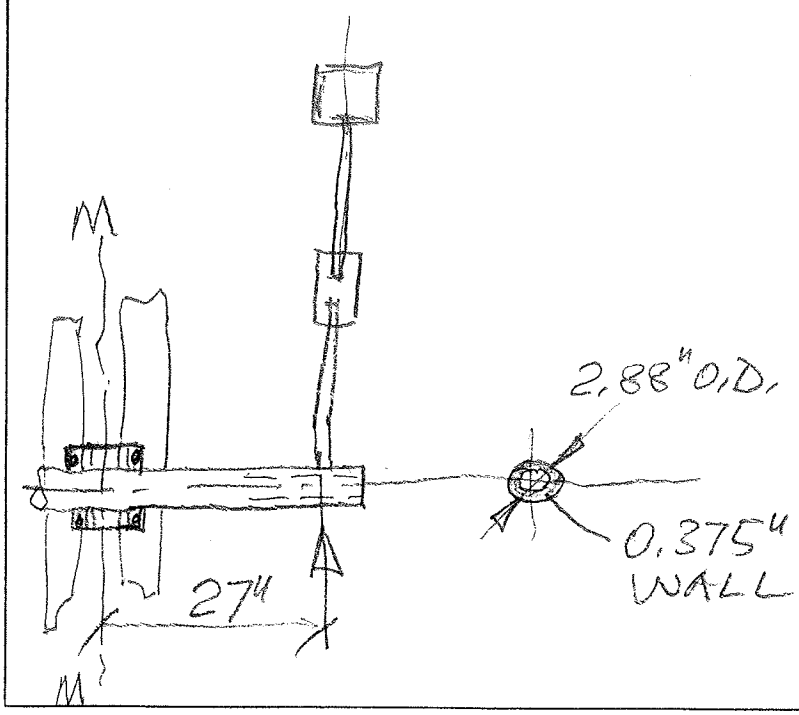

GOVERNING MOMENT AT PLANE M - M,
(SKETCH ON PAGE 42) :

$$M = 982.42(27)$$
$$M = \underline{26,525.39} \quad [\text{lbin}]$$

BENDING STRESS VALUE IN STABILIZING BEAM

$$\sigma = \frac{10\,M\,D}{D^4 - d^4}$$

$$D = 2.88''$$
$$d = 2.13$$

$$\sigma = \frac{10\,(26,525.93)\,2.88}{2.88^4 - 2.13^4}$$

$$\sigma = 15,845 \quad [\text{psi}]$$

O.K.

4. REFERENCES

REF [1] DESIGN OF WELDMENTS BY O.W. BLODGETT

REF [2] — " —

REF [3] — " —

REF [4] — " —

REF [5] DESIGN OF WELDED STRUCTURES BY O.W. BLODGETT

REF [6] — " —

5. DRAWING DOCUMENTATION

5.1 MINISKIRT - TRANSPORT GIZMO ASSEMBLY
2563.316 ME-382229

5.2 SUPPORT FRAME ASSEMBLY
2563.316 ME-382280

5.3 LIFTING FIXTURE
2563.316-MD-382230

5.4 LIFTER ADJUSTER WELDMENT
2563.316-MC-382231

5.5 STABILIZING BEAM - WELDMENT
2563.316 MD-382332

5.6 STABILIZING BEAM - TUBING
2563.316 MD-382333

5.7 LIFTING DIAGRAM
2563.316, MD-382351

5.8 LOWER CMEX - PIT STAND ASSEMBLY
2583.316. ME-382258

REV.	DESCRIPTION	DRAWN	DATE
		APPROVED	DATE

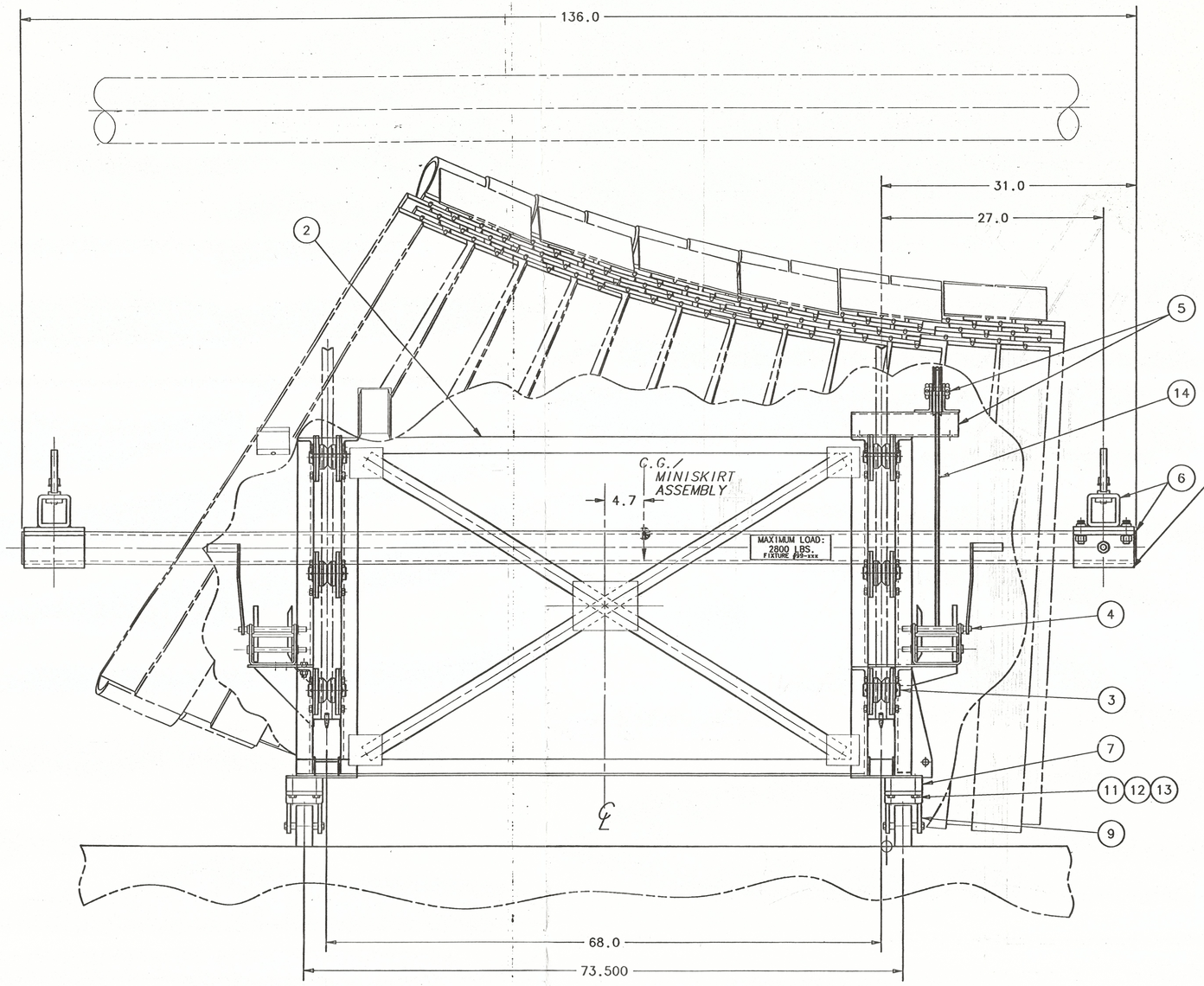

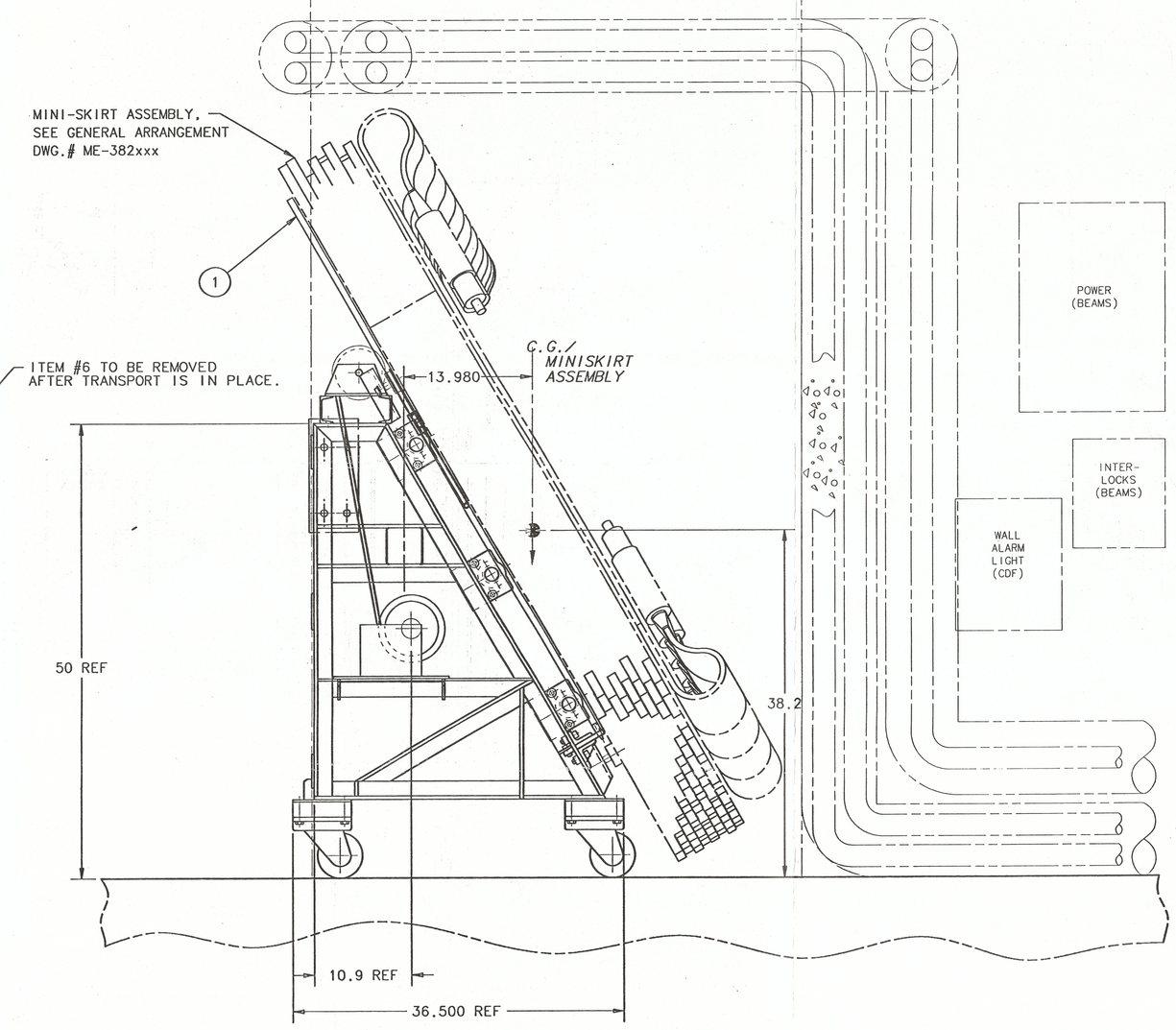

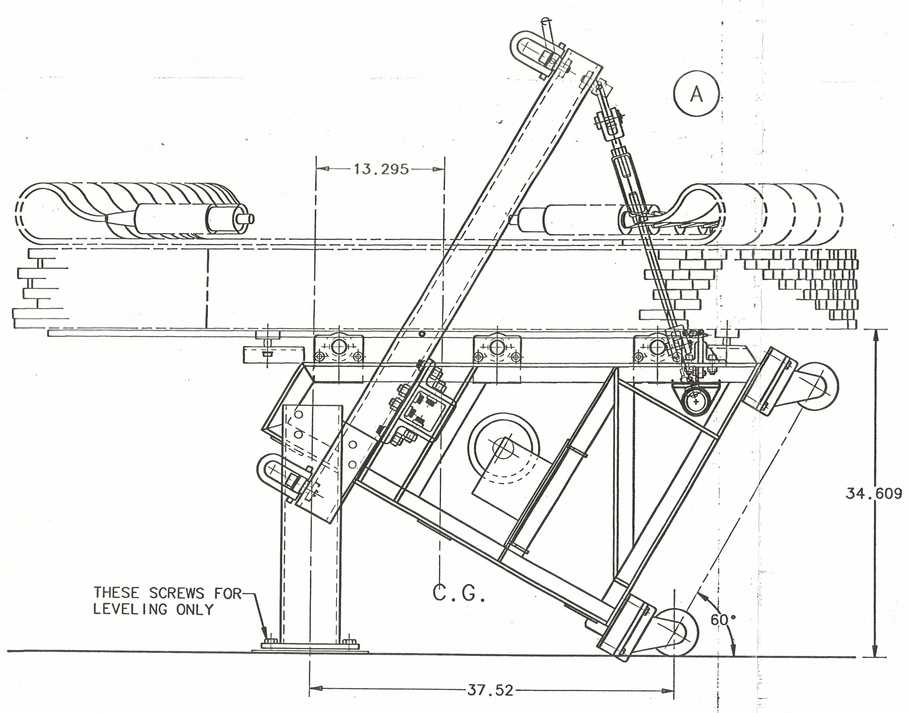

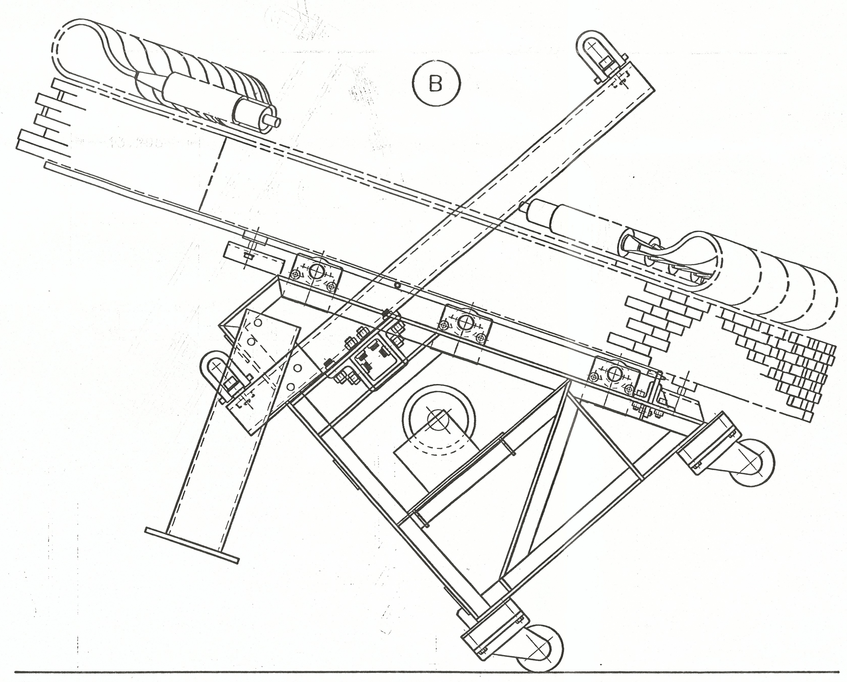

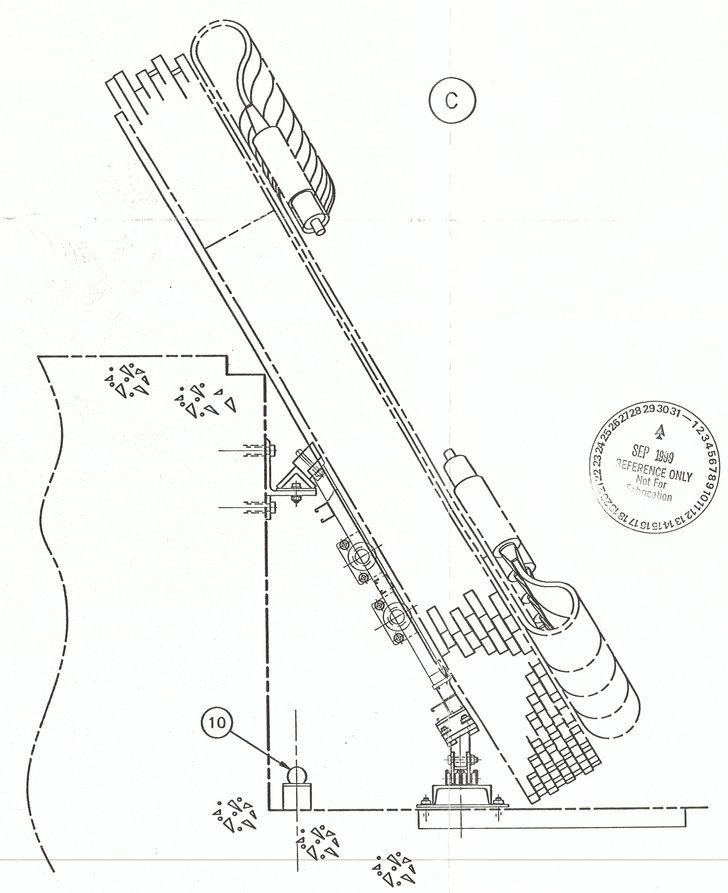

ITEM NO.	PART NO.	DESCRIPTION OR SIZE	QTY. REQ.
14	COML	CABLE, SST	2
13	1226-0700	WASHER, FLAT FOR 1/2 SCREW, SST	16
12	1210-0740	NUT, HEX, #1/2-13 UNC, SST	16
11	1226-0650	BOLT, HEX HD. CAP. #1/2-13 UNC x 3" LG., SST	16
10	COML	TOOLING BALLS, SST	2
9	COML	CASTER, 1500# CAP., 5"ø, STEEL McMEEKIN EQUIP. P/N S-HS-5FS	4
8	MB-382xxx	GUIDE RAIL & LOCK	2
7	MB-382237	MOUNTING SHIM FOR CASTER	4
6	MD-382230	LIFTING FIXTURE ASSEMBLY	1
5	MC-382234	BLOCK AND SHACKLE ASSEMBLY	2
4	MD-382xxx	TRAILER WINCH	2
3	MC-382238	SUPPORT ROLLER ASSEMBLY	6
2	MC-382xxx	FRAME WELDMENT	1
1	MD-382279	MINI-SKIRT MODULE SKIN WELD.	1

PARTS LIST

UNLESS OTHERWISE SPECIFIED			ORIGINATOR	A. SZYMULANSKI	7/13/99
.XX	.XXX	ANGLES	DRAWN	PAT POLL	7/15/99
±.02	±	±	CHECKED		
			APPROVED		
			USED ON		
			MATERIAL	SEE PARTS LIST	

1. BREAK ALL SHARP EDGES .015 MAX.
2. DO NOT SCALE DRWG.
3. DIMENSIONING IN ACCORD WITH ANSI Y14.5M-1982 STD'S.
4. ALL DIMENSIONS ARE IN INCHES.

√ MAX. ALL MACHINED SURFACES

SEP 1999 REFERENCE ONLY Not For Construction

FERMI NATIONAL ACCELERATOR LABORATORY
UNITED STATES DEPARTMENT OF ENERGY

PPD/CDF UPGRADE MINI-SKIRT TRANSPORT GIZMO ASSEMBLY

SCALE	DRAWING NUMBER	SHEET NO.	REV.
1/16=1	(2563.457-MB-339965) 2563.316-ME-382229	1 OF 1	

REV.	DESCRIPTION	DRAWN	DATE ?
		APPROVED	DATE ?

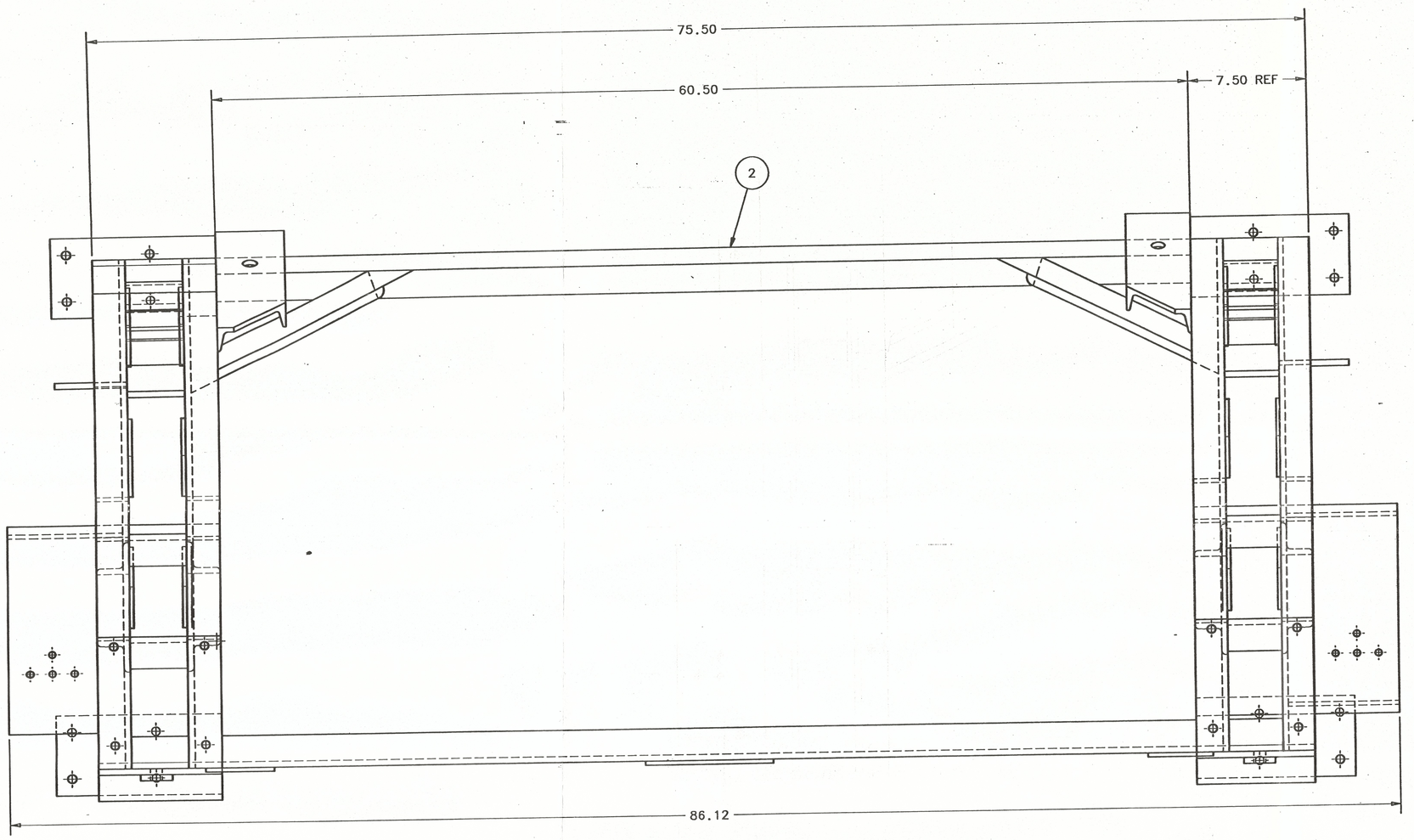

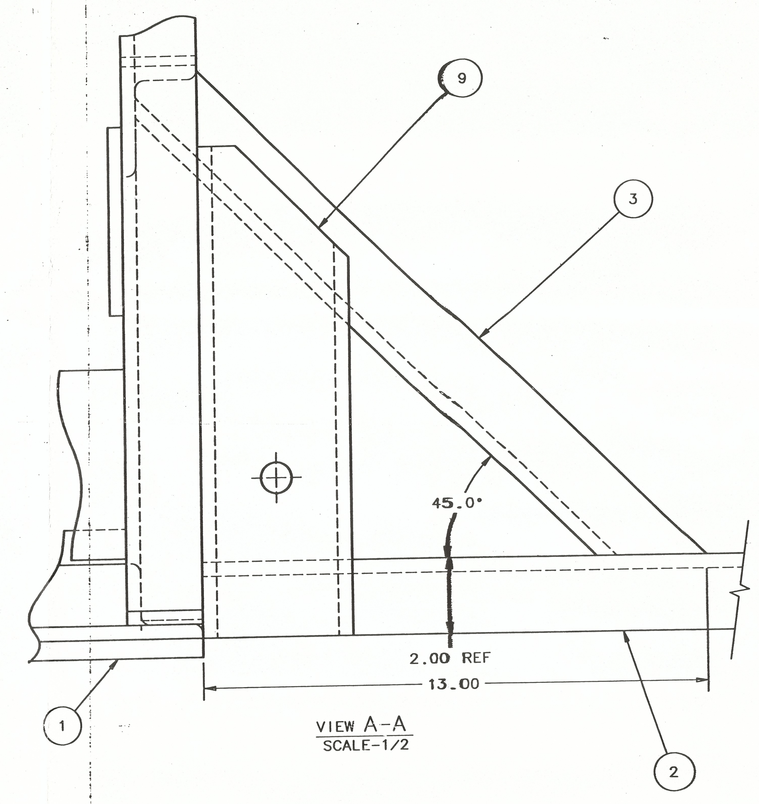

VIEW A-A
SCALE-1/2

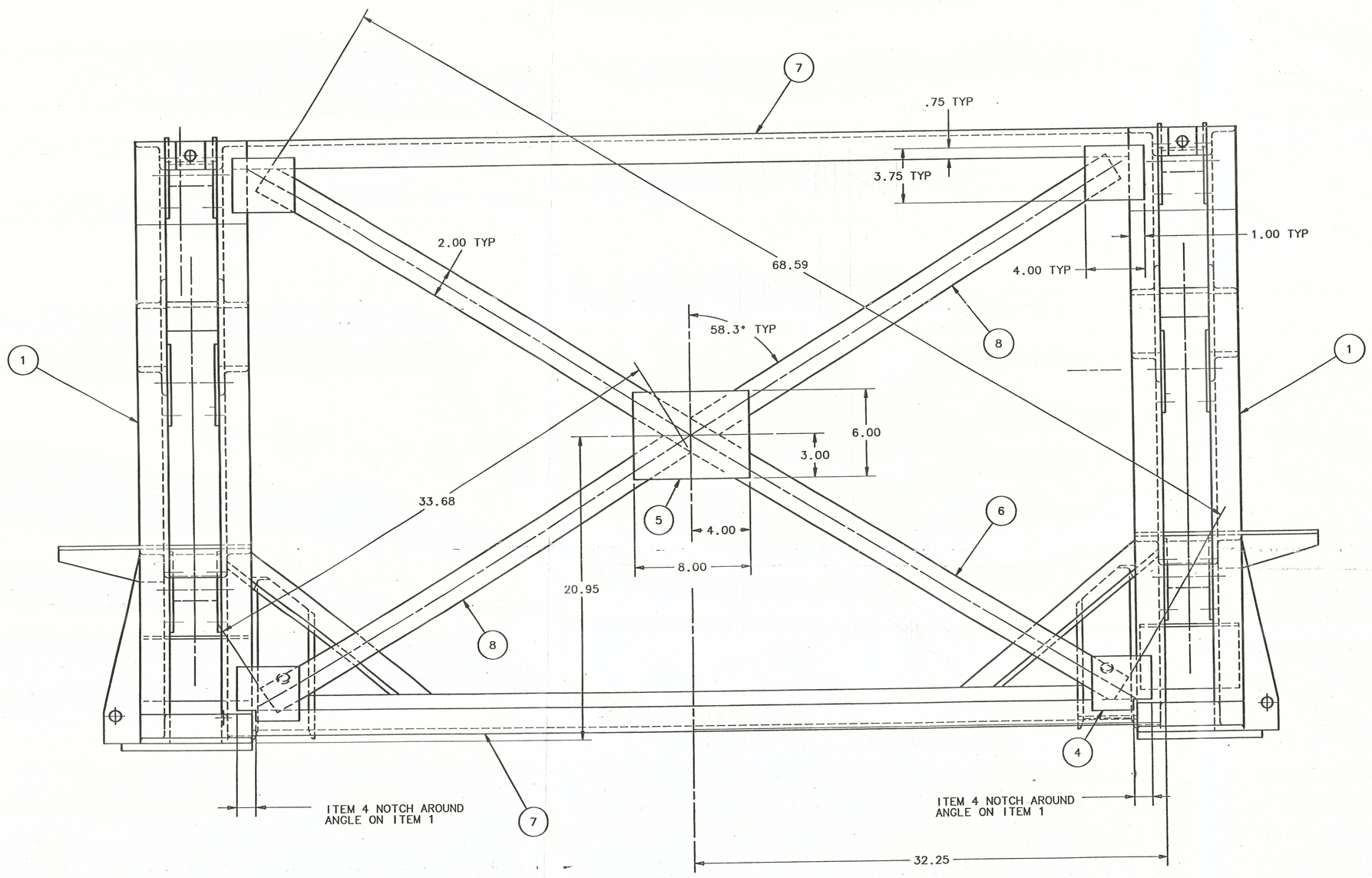

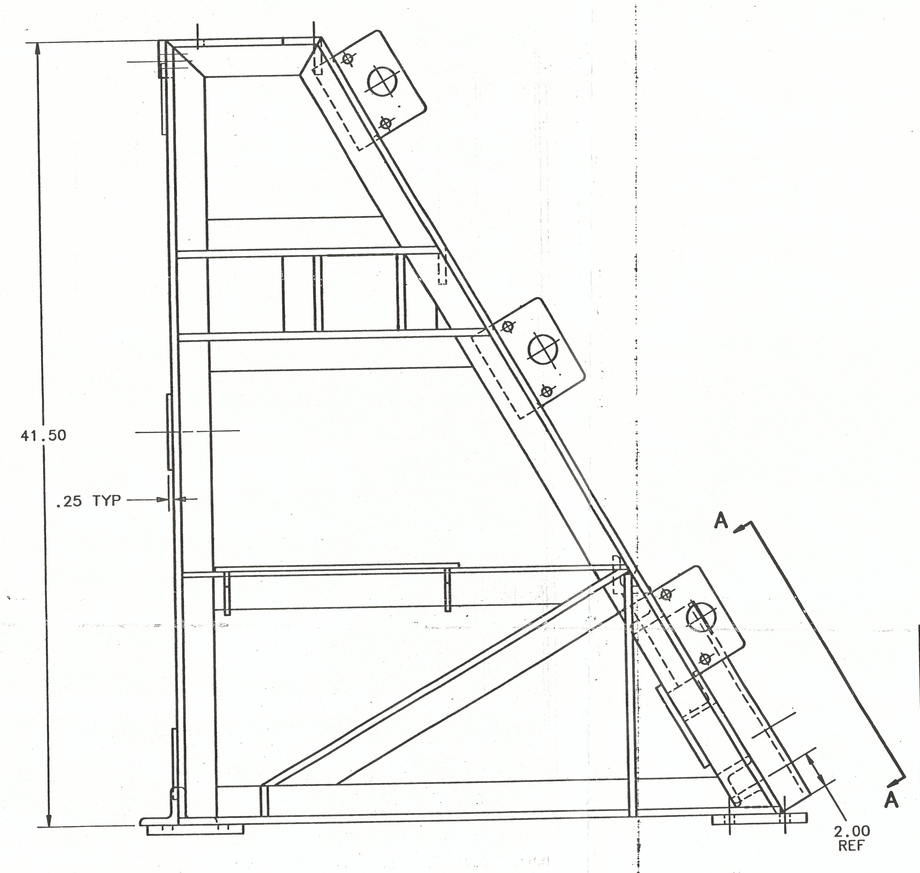

ITEM NO.	PART NO.	DESCRIPTION OR SIZE	QTY. REQ.
9	MC-382330	BOTTOM CLAMP CHANNEL	1LH 1RH
8	COML	.25 x 2.00 x 33.86 LG. PLATE ASTM-A36 STEEL	2
7	COML	3/8 x 2 x 2 x 60.50 LG. ANGLE ASTM-A36 STEEL	2
6	COML	.25 x 2.00 x 68.59 LG. PLATE ASTM-A36 STEEL	1
5	COML	.25 x 6.00 x 8.00 PLATE ASTM-A36 STEEL	1
4	COML	.25 x 3.75 x 4.00 PLATE ASTM-A36 STEEL	4
3	MC-382297	EAR GUSSET	2
2	MC-382331	CROSS TIE	1
1	MD-382284	SUPPORT ROLLER FRAME SECTION	1 LH 1 RH

PARTS LIST

UNLESS OTHERWISE SPECIFIED			ORIGINATOR	A SZYMULANSKI	
.XX	.XXX	ANGLES	DRAWN	R HARING	15 SEP 99
± .02	± —	± 1°	CHECKED		15 SEP 99
			APPROVED		SEP 15 99
			USED ON		
			MATERIAL	SEE ABOVE	

1. BREAK ALL SHARP EDGES .015 MAX.
2. DO NOT SCALE DRWG.
3. DIMENSIONING IN ACCORD WITH ANSI Y14.5M-1982 REV.
4. ALL DIMENSIONS ARE IN INCHES.

250 MAX. ALL MACHINED SURFACES

A
SEP 1999
APPROVED For Fabrication

FERMI NATIONAL ACCELERATOR LABORATORY
UNITED STATES DEPARTMENT OF ENERGY

PPD/CDF UPGRADE
MINISKIRT TRANSPORT GIZMO
SUPPORT FRAME ASSEMBLY

SCALE	DRAWING NUMBER	SHEET NO.	REV.
1/4	2563.316-ME-382280	1 OF 1	

REV.	DESCRIPTION	DRAWN / APPROVED	DATE / DATE
A	REVISED LENGTH OF ADJUSTER; REVISED LENGTH OF SPREADER; ADDED ONE SET OF #5. HOIST RING	PAT POLL / XG.	9/9/99 / 9.9.99

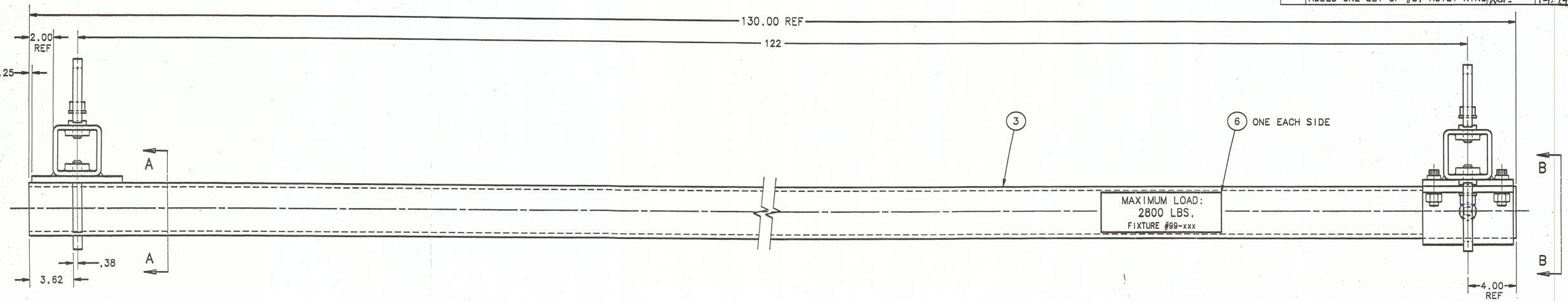

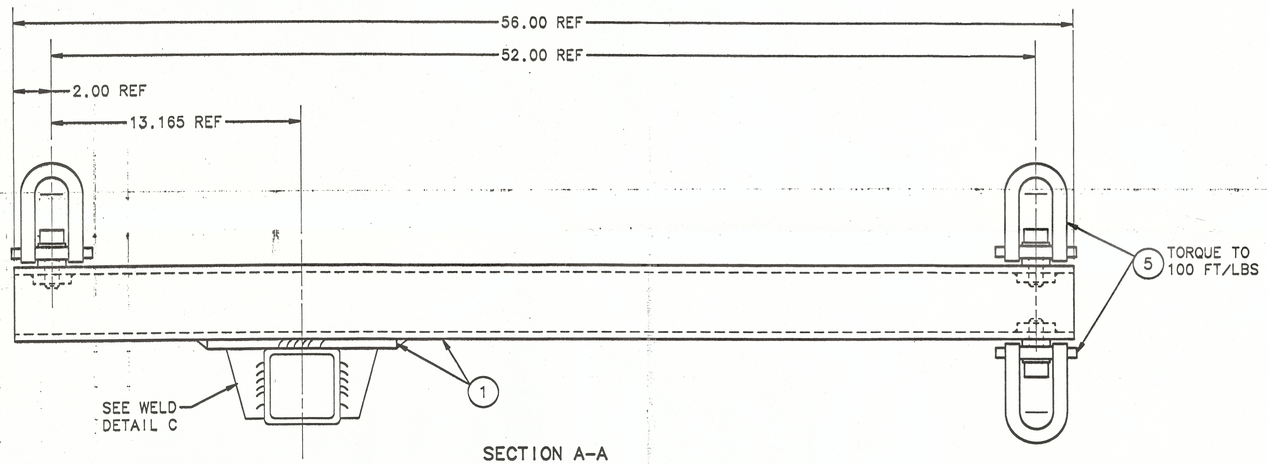

SECTION A-A
(FIXED ASS'Y)

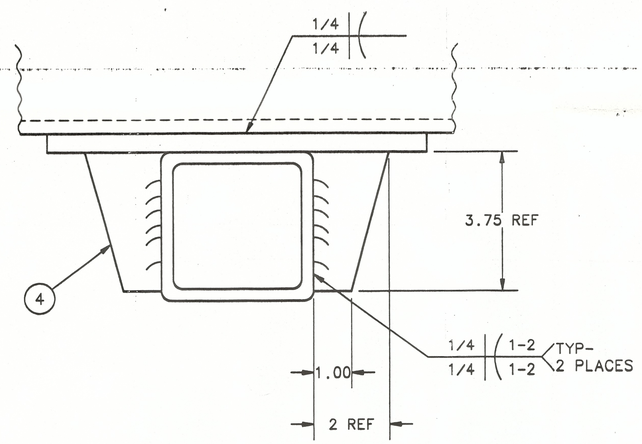

WELD DETAIL C

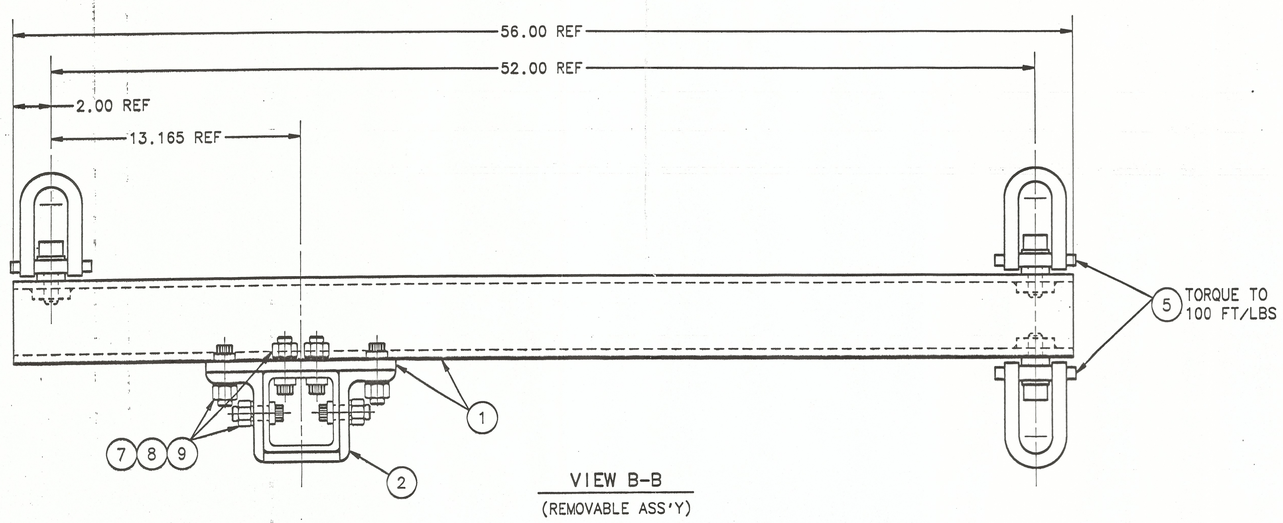

VIEW B-B
(REMOVABLE ASS'Y)

ITEM NO.	PART NO.	DESCRIPTION OR SIZE	QTY. REQ.
9	COML	NUT, HEX HEAVY DUTY, #3/4-10 UNC	10
8	COML	WASHER, LOCK, 3/4 SCREW SIZE, SST	10
7	COML	SCREW, FERRY CAP, #3/4-10 UNC x 2" LG.	10
6	MFG.	LABEL, RED, SELF-ADHESIVE, "SCOTCH-CAL", 4 x 8	2
5	COML	HOIST RING, HEAVY DUTY, 5000# LIMIT, 3/4-10 UNC, McMASTER-CARR #3052-T62	6
4	COML	PLATE, 1/2 x 2 x 3.75, STEEL; SEE DETAIL C ASTM A36	2
3	MC-382233	LIFTER SPREADER BAR	1
2	MB-382232	LIFTER ADJUSTER BLOCK	1
1	MC-382231	LIFTER ADJUSTER WELDMENT (1 FIXED AND 1 REMOVABLE)	2

PARTS LIST

UNLESS OTHERWISE SPECIFIED			ORIGINATOR	A. SZYMULANSKI	
.XX	.XXX	ANGLES	DRAWN	PAT POLL	7/14/99
± .02	±	±	CHECKED	JOHN E. RAUCH	8/11/99
			APPROVED	A. SZYMULANSKI	8/11/99

1. BREAK ALL SHARP EDGES .015 MAX.
2. DO NOT SCALE DRWG.
3. DIMENSIONING IN ACCORD WITH ANSI Y14.5M-1982 STD'S.
4. ALL DIMENSIONS ARE IN INCHES.

√ MAX. ALL MACHINED SURFACES

USED ON: ME-382229

MATERIAL: SEE PARTS LIST

FERMI NATIONAL ACCELERATOR LABORATORY
UNITED STATES DEPARTMENT OF ENERGY

PPD/CDF UPGRADE MINI-SKIRT TRANSPORT GIZMO LIFTING FIXTURE

SCALE	DRAWING NUMBER	SHEET NO.	REV.
1/4=1	2563.316-MD-382230	1 OF 1	A

REV.	DESCRIPTION	DRAWN / APPROVED	DATE / DATE
A	REVISED LENGTH OF TUBING; WAS 46.00. ADDED ITEM #2	PAT POLL / KSC	8/16/99 / 9.9.99

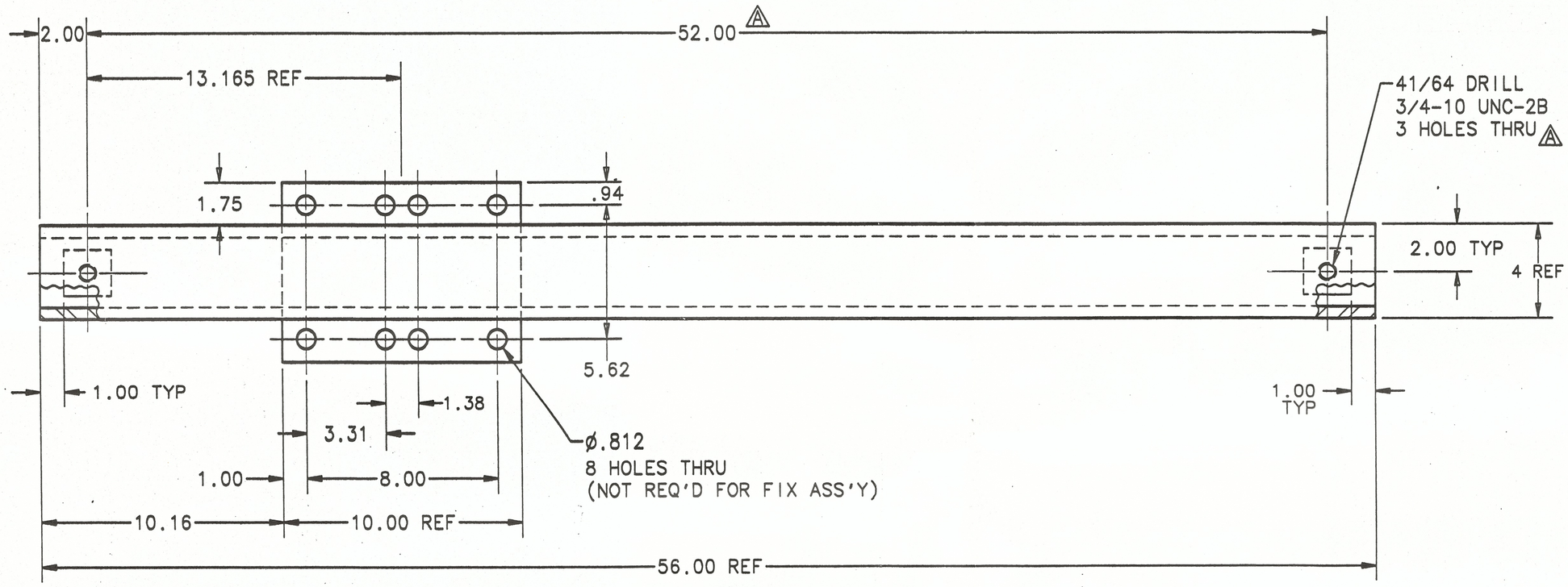

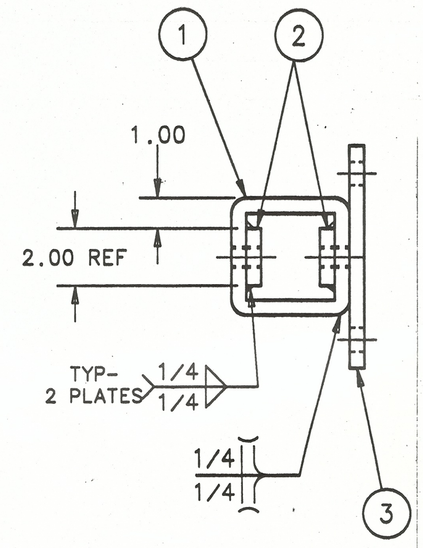

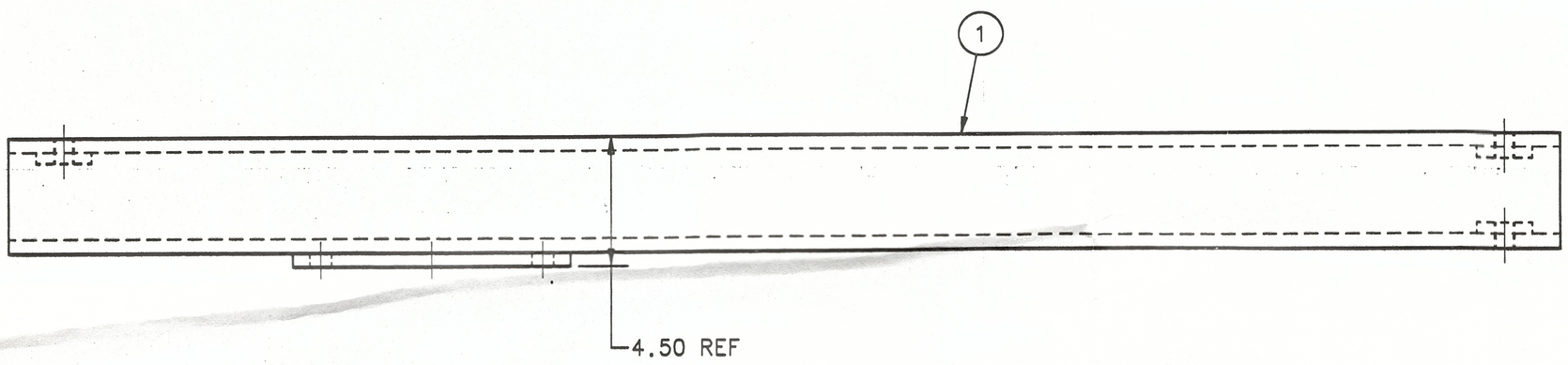

ITEM NO.	PART NO.	DESCRIPTION OR SIZE	QTY. REQ.
3	COML.	STEEL FLATS, ASTM-A36, 1/2 x 7.50 x 10.00" LG.	1
2	COML.	STEEL FLATS, ASTM-A36, 1/2 x 2 x 2.00	3
1	COML.	STRUCTURAL TUBING, ASTM-A36, 4 x 4 x 1/2 x 56.00" ±.06 LG.	1

PARTS LIST

UNLESS OTHERWISE SPECIFIED			ORIGINATOR	A. SZYMULANSKI	
.XX	.XXX	ANGLES	DRAWN	PAT POLL	7/21/99
±.02	±	±	CHECKED	JOHN E. RAUCH	8/11/99
			APPROVED	A. SZYMULANSKI	8/11/99

1. BREAK ALL SHARP EDGES .015 MAX.
2. DO NOT SCALE DRWG.
3. DIMENSIONING IN ACCORD WITH ANSI Y14.5M-1982 STD'S.
4. ALL DIMENSIONS ARE IN INCHES.

250 MAX. ALL MACHINED SURFACES

USED ON: MD-382230

MATERIAL: SEE PARTS LIST

FERMI NATIONAL ACCELERATOR LABORATORY
UNITED STATES DEPARTMENT OF ENERGY

PPD/CDF UPGRADE
MINISKIRT TRANSPORT GIZMO
LIFTER ADJUSTER WELDMENT

SCALE	DRAWING NUMBER	SHEET NO.	REV.
1/4=1	2563.316-MC-382231	1 OF 1	A

REV.	DESCRIPTION	DRAWN	DATE
		APPROVED	DATE

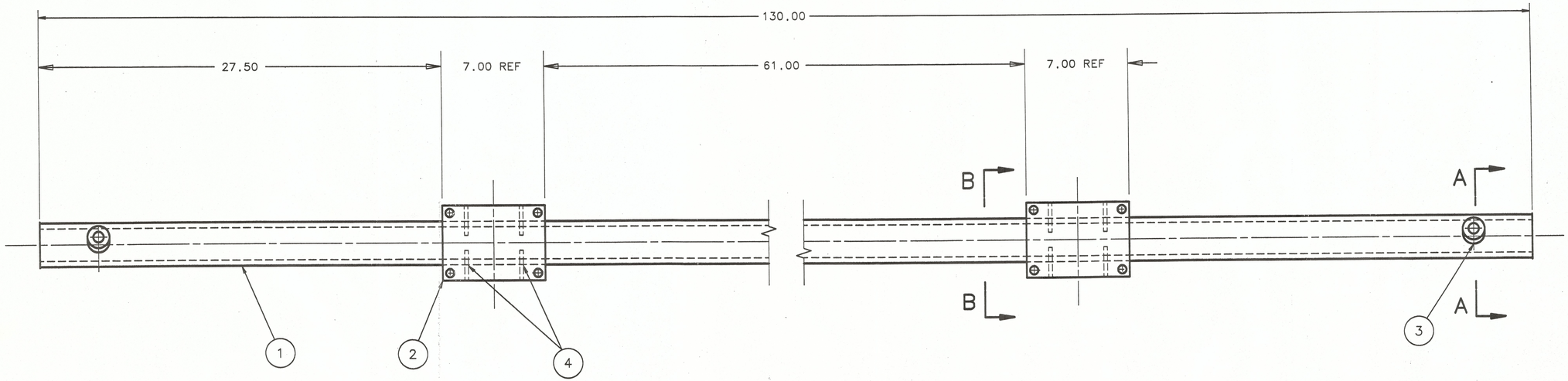

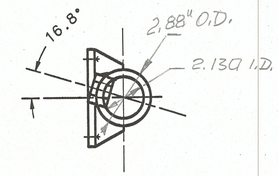

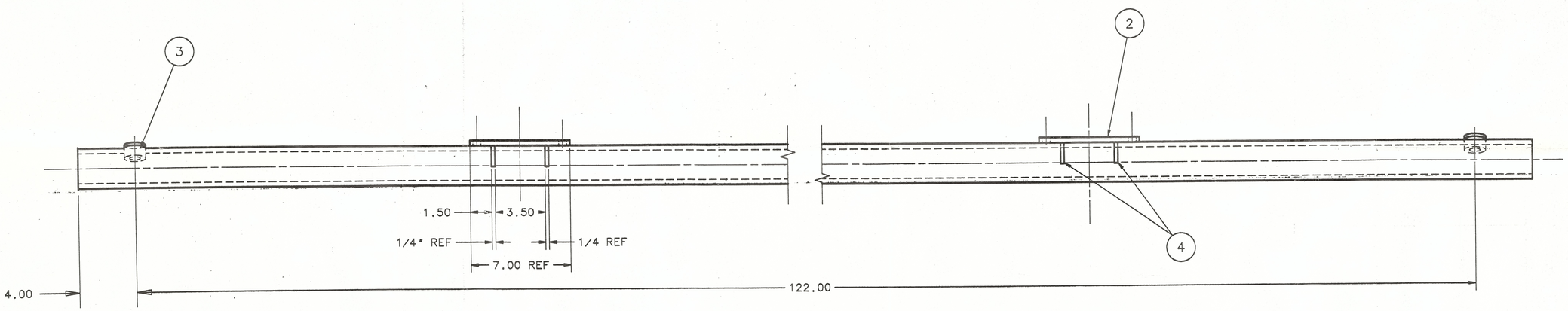

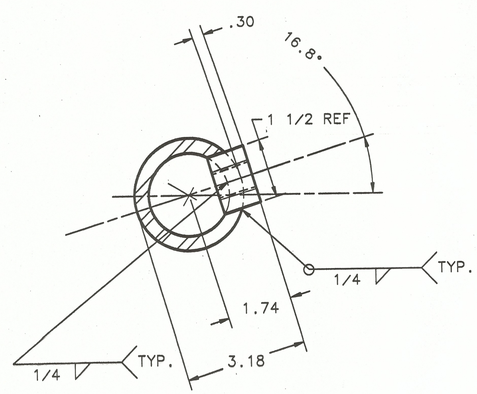

SECTION A-A

SCALE: 1:2

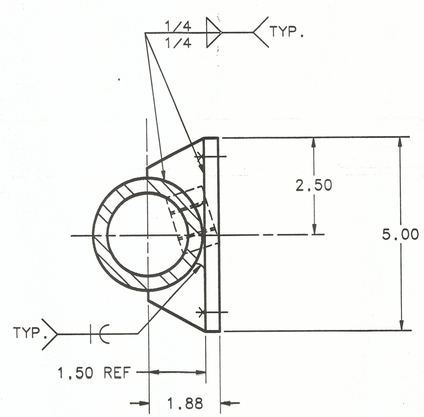

SECTION B-B

SCALE: 1:2

ASSEMBLY WEIGHT: 120 [lbs]

ITEM NO.	PART NO.	DESCRIPTION OR SIZE	QTY. REQ.
4	MC-382335	RIB	8
3	MC-382334	THD. INSERT	2
2	MC-382318	STABILIZER MOUNTING PLATE	2
1	MD-382333	TUBING	1

PARTS LIST

UNLESS OTHERWISE SPECIFIED					
.XX	.XXX	ANGLES	ORIGINATOR	A.SZYMULANSKI	9-14-99
± .03	±	± 1/2°	DRAWN	L.SZCZEPANIK	9-16-99
			CHECKED		17SEP99
			APPROVED		SEPT. 17. 99

1. BREAK ALL SHARP EDGES .015 MAX.
2. DO NOT SCALE DRWG.
3. DIMENSIONING IN ACCORD WITH ANSI Y14.5M-1982 STD'S.
4. ALL DIMENSIONS ARE IN INCHES.

250 MAX. ALL MACHINED SURFACES

USED ON: ME-382229

MATERIAL: SEE PARTS LIST

FERMI NATIONAL ACCELERATOR LABORATORY
UNITED STATES DEPARTMENT OF ENERGY

PPD/CDF UPGRADE MINISKIRT TRANSPORT GIZMO STABILIZING BEAM - WELDMENT

SCALE	DRAWING NUMBER	SHEET NO.	REV.
1:4 OR AS NOTED	2563.316-MD-382332	1 OF 1	

4 SEP 1999 APPROVED For Fabrication

REV.	DESCRIPTION	DRAWN	DATE
		APPROVED	DATE

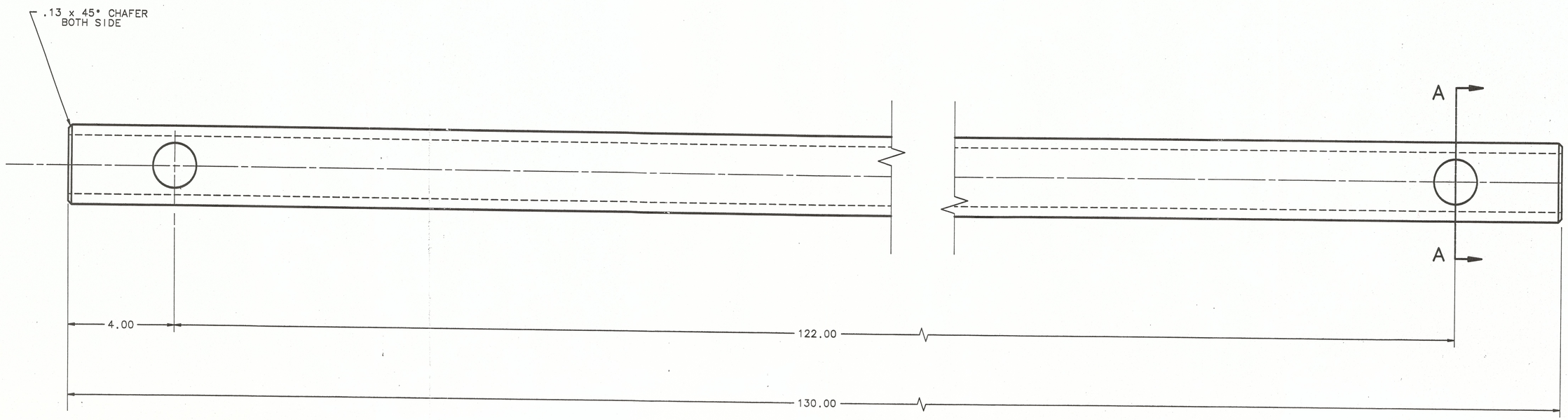

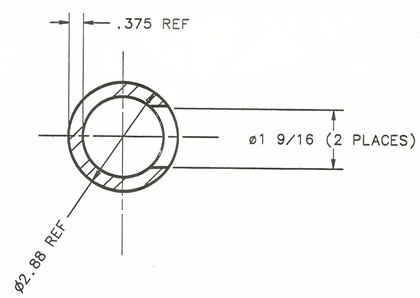

SECTION A-A

SEP 1999
APPROVED
For
Fabrication

ITEM NO.	PART NO.	DESCRIPTION OR SIZE	QTY. REQ.

PARTS LIST

UNLESS OTHERWISE SPECIFIED			ORIGINATOR	A.SZYMULANSKI	9-14-99
.XX	.XXX	ANGLES	DRAWN	L.SZCZEPANIK	9-16-99
± .03	± .005	± ---	CHECKED		17 SEP 99
			APPROVED		Sept. 17, 99

1. BREAK ALL SHARP EDGES .015 MAX.
2. DO NOT SCALE DRWG.
3. DIMENSIONING IN ACCORD WITH ANSI Y14.5M-1982 STD'S.
4. ALL DIMENSIONS ARE IN INCHES.

250 √ MAX. ALL MACHINED SURFACES

USED ON: MD-382332

MATERIAL: .375 x 2.88 x 130.00 LG. STEEL TUBING, EXISTING MAT. AT MAB

FERMI NATIONAL ACCELERATOR LABORATORY
UNITED STATES DEPARTMENT OF ENERGY

PPD/CDF UPGRADE
MINISKIRT TRANSPORT GIZMO
STABILIZING BEAM - TUBING

SCALE	DRAWING NUMBER	SHEET NO.	REV.
1:2	2563.316-MD-382333	1 OF 1	

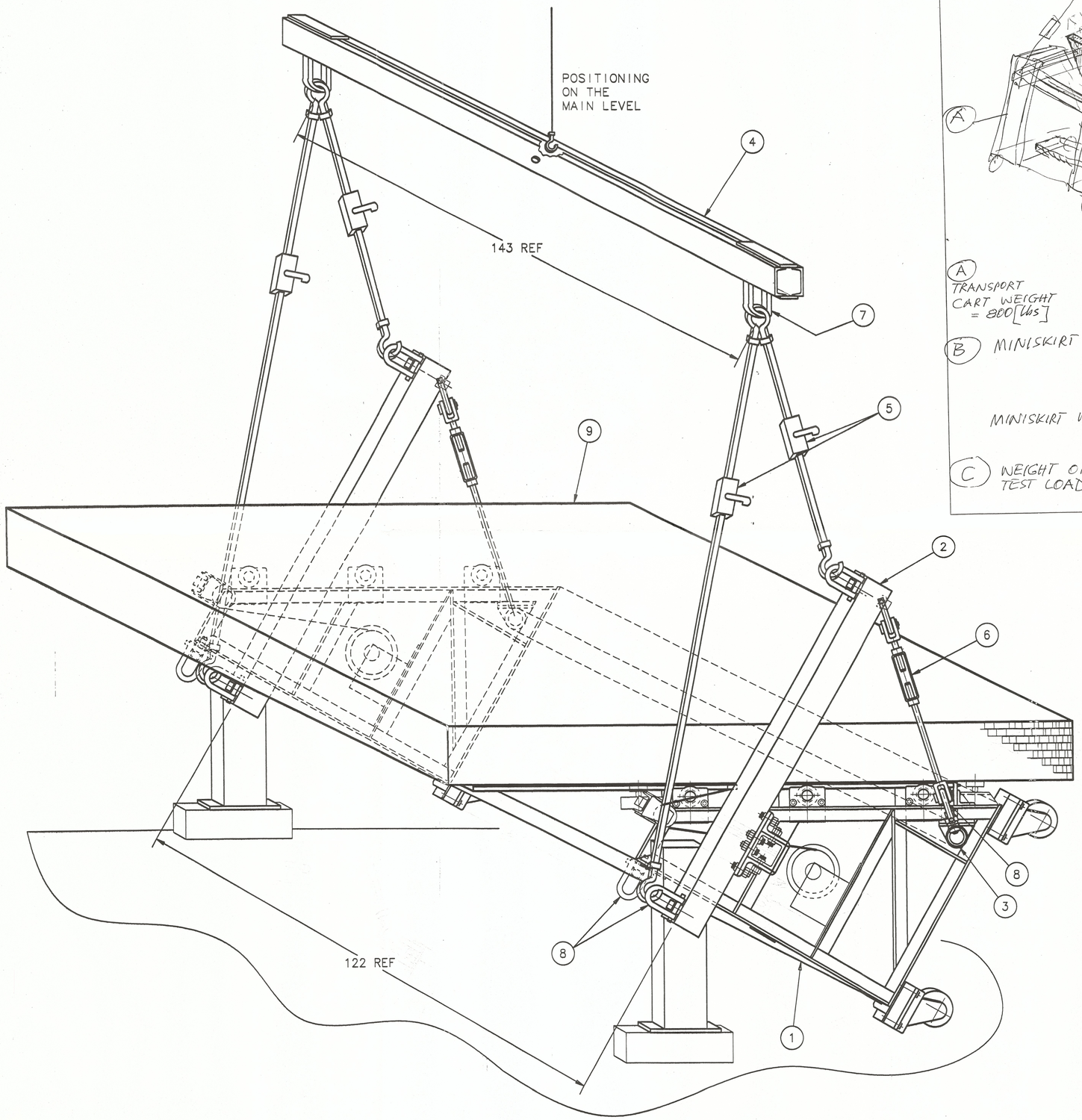

FERMILAB ENGINEERING NOTE

SUBJECT: MINISKIRT TRANSPORT GIZMO – LIFTING BEAM LOAD TEST

NAME: A. SZYMULANSKI

DATE: OCT. 8, 99

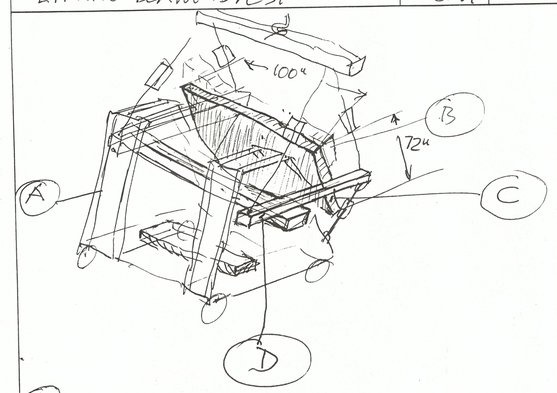

(A) TRANSPORT CART WEIGHT = 800 [lbs]

(B) MINISKIRT W/SCINTILLATORS 1,794 [lbs]

SCINTILLATORS 498.6 [lbs]

MINISKIRT WITHOUT SCINTILLATORS 1295.4 [lbs]

(C) WEIGHT OF THE TEST LOAD (C) $\geq (1.25)(1794) = 2242.5$ [lbs]

FERMILAB ENGINEERING NOTE

SUBJECT:

NAME:

DATE:

REVISION DATE:

ACTUAL WEIGHT:

$G = \gamma(100)(72)(1)$

$G = 0.3(7200)(1)$

$G = \underline{2160}$ [lbs]

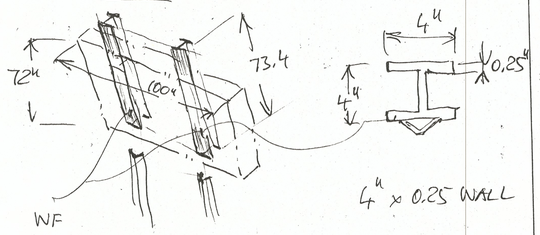

$G_{WF} = \underline{130}$ lbs

TOTAL TEST WEIGHT (C)

$G_T = 2160 + 130$

$G_T = \underline{2290}$ [lbs]

FERMILAB ENGINEERING NOTE

SUBJECT:

RATED LOAD OF THE LIFTING FIXTURE (D)

RATED LOAD

$= 2290 + 800$

$= \boxed{3100 \text{ lbs}}$

ITEM NO.	PART NO.	DESCRIPTION OR SIZE	QTY. REQ.
9	ME-382258	MINI--SKIRT ASSEMBLY	1
8	COML.	HOIST RING, 3/4", McM.-CARR #3052T62, 5000 LB. CAP.	6
7	COML.	SHACKLE, FORGED STL, 1"ø PIN, McM.-CARR #8966T55, 12.5T CAP.	2
6	COML.	TURNBUCKLE ASSEMBLY, 3/4", JAW END, McM.-CARR #30045T52, 5200 LB. CAP.	2
5	COML.	CABLE PULLER, 4000 LB. CAPACITY	4
4	COML.	SPREADER BAR #105, 5 TON CAPACITY	1
3	MD-382332	STABILIZING BEAM	1
2	MD-382230	LIFTING FIXTURE	2
1	ME-382229	TRANSPORT FRAME	1

PARTS LIST

UNLESS OTHERWISE SPECIFIED: .XX ± , .XXX ± , ANGLES ±

1. BREAK ALL SHARP EDGES .015 MAX.
2. DO NOT SCALE DRWG.
3. DIMENSIONING IN ACCORD WITH ANSI Y14.5M-1982 STD'S.
4. ALL DIMENSIONS ARE IN INCHES.

√ MAX. ALL MACHINED SURFACES

ORIGINATOR: A. SZYMULANSKI

DRAWN: PAT POLL 9/23/99

CHECKED: 28 SEP 99

APPROVED: SEP. 28. 99

USED ON: ME-382229

MATERIAL: SEE PARTS LIST

FERMI NATIONAL ACCELERATOR LABORATORY
UNITED STATES DEPARTMENT OF ENERGY

PPD/CDF UPGRADE MINISKIRT TRANSPORT LIFTING DIAGRAM

SCALE: 1/8=1

DRAWING NUMBER: 2563.316-MD-382351

SHEET NO.: 1 OF 1

REV.:

REV.	DESCRIPTION	DRAWN / APPROVED	DATE / DATE

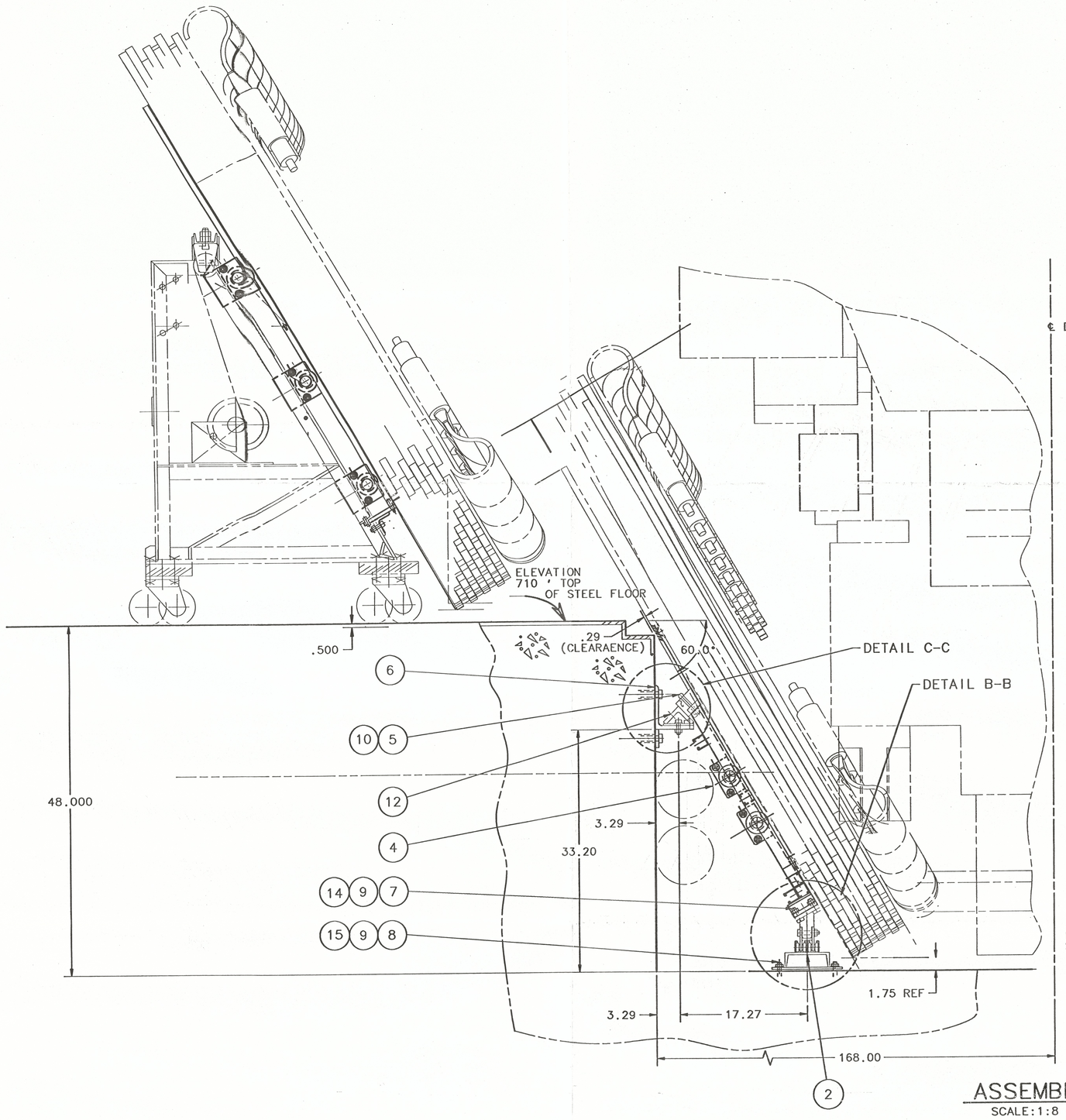

ASSEMBLY
SCALE:1:8

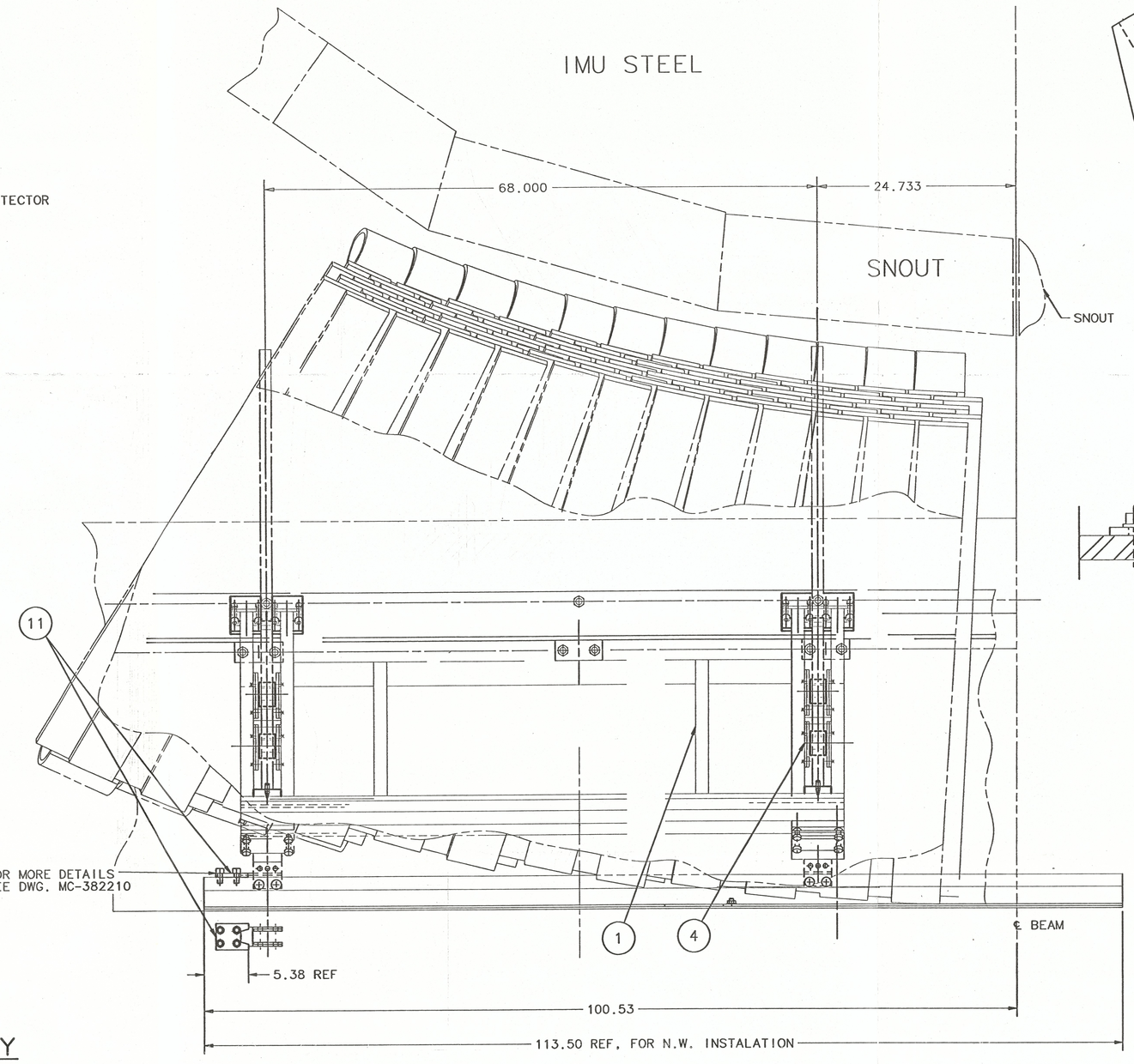

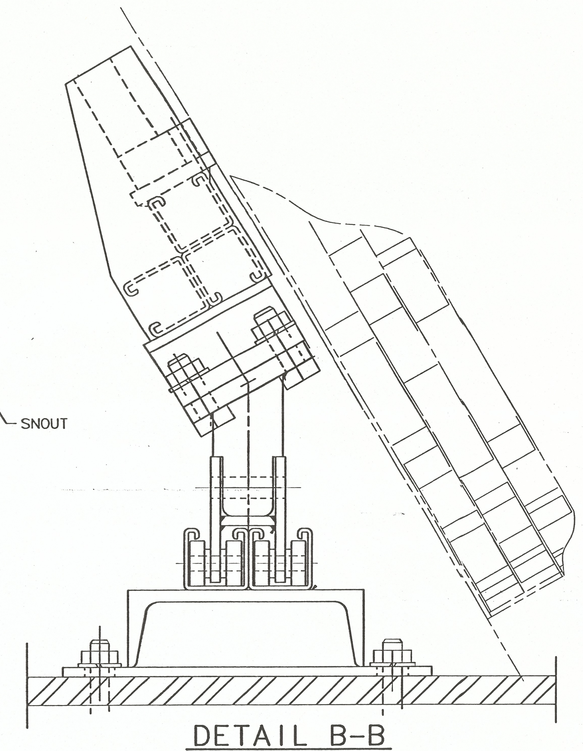

DETAIL B-B
SCALE:1:2

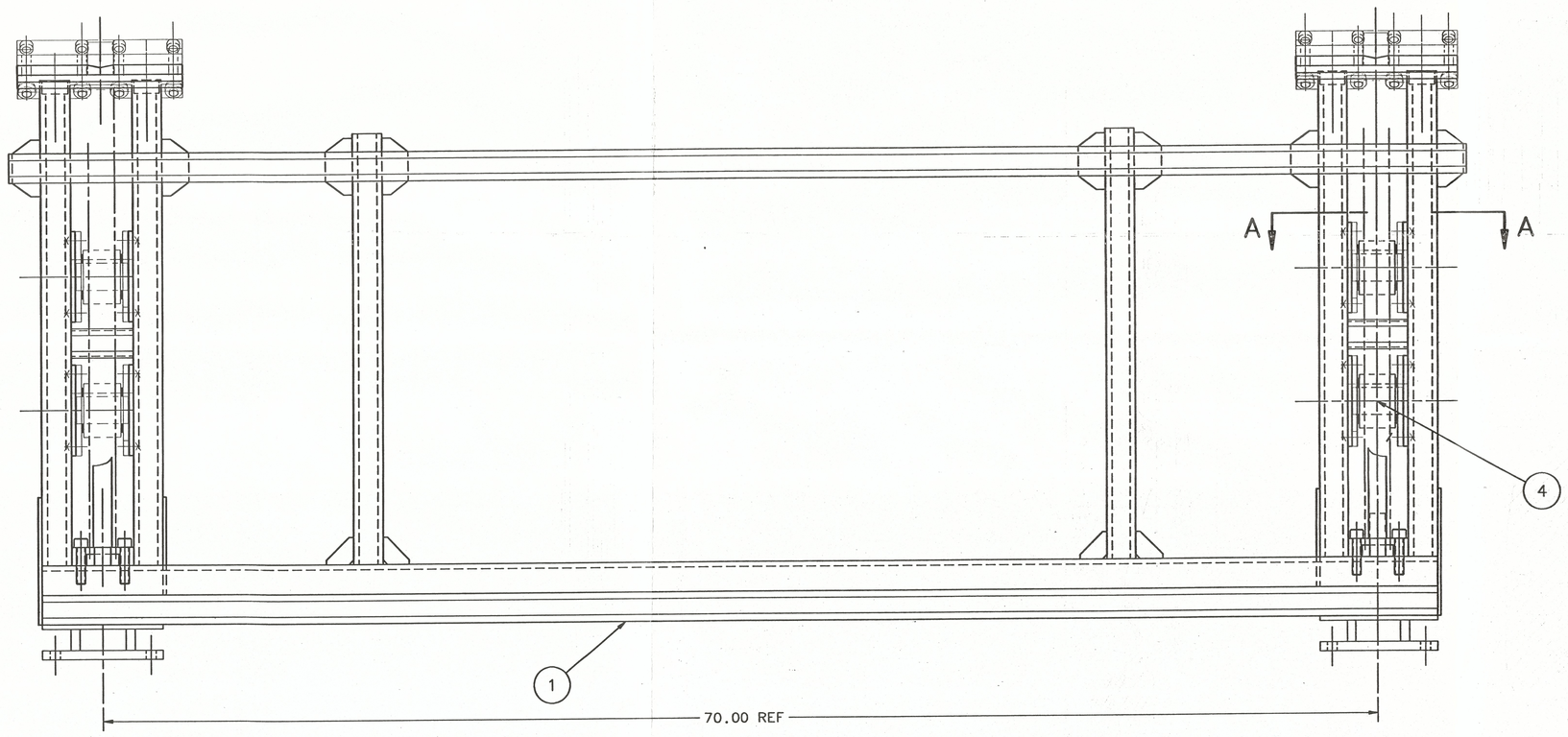

FRAME DETAIL
SCALE:1:4

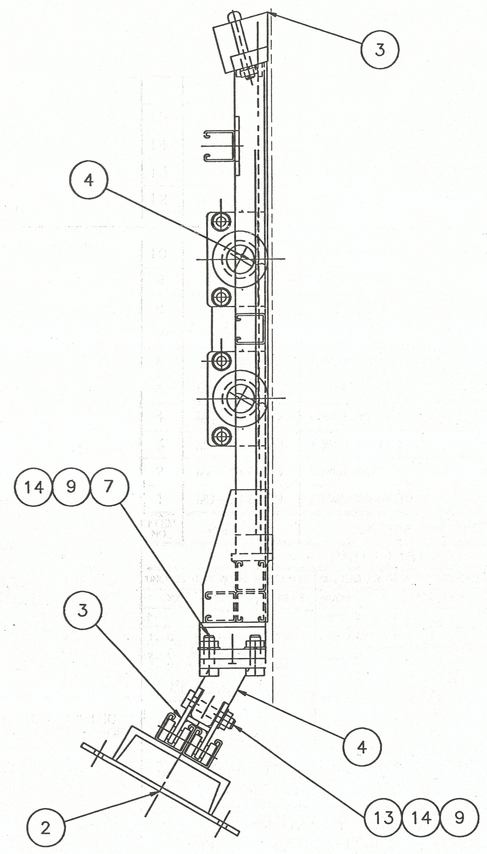

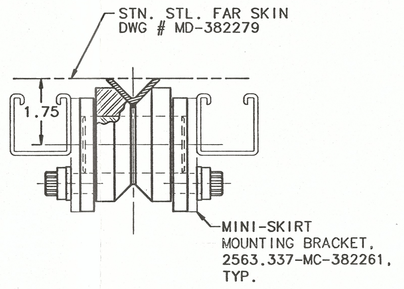

SECTION A-A
SCALE: 1:2

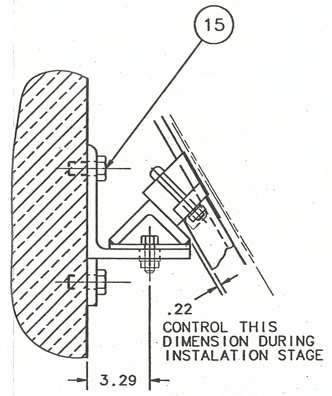

DETAIL C-C
SCALE:1:4

ITEM NO.	PART NO.	DESCRIPTION OR SIZE	QTY. REQ.
15	COM'L	3/4-10 UNC HEX. ANCHOR BOLT	6
14	COM'L	1/2 SPRIG WASHER	24
13	COM'L	1/2-13 UNC HEX. BOLT LG.-2.75	6
12	ME-382207	SLIDE RAIL	1
11	MD-382308	"CONSTANT" POSITION LOCK	1
10	COM'L	1/2-13 UNC HEX. BOLT LG.-3.25	8
9	COM'L	1/2-13 UNC HEX. NUT	16
8	COM'L	1/2-13 UNC ANCHOR BOLT	8
7	COM'L	1/2-13 UNC HEX. BOLT LG.-1.75	8
6	ME-382208	UPPER SUPPORT ANGLE	1
5	MD-382206	SLIDE	2
4	MD-382322	LOWER ROLLER INSERT	1
3	MD-382210	LOWER ROLLER	2
2	ME-382209	LOWER RAIL	1
1	MD-382259	FRAME-WELDMENT	1

PARTS LIST

UNLESS OTHERWISE SPECIFIED			ORIGINATOR	A.SZYMULANSKI	8-11-99
.XX	.XXX	ANGLES	DRAWN	L.SZCZEPANIK	9-20-99
±	±	±	CHECKED		
			APPROVED		
			USED ON		
			MATERIAL	SEE ABOVE	

1. BREAK ALL SHARP EDGES .015 MAX.
2. DO NOT SCALE DRWG.
3. DIMENSIONING IN ACCORD WITH ANSI Y14.5M-1982 STD'S.
4. ALL DIMENSIONS ARE IN INCHES.

√ MAX. ALL MACHINED SURFACES

FERMI NATIONAL ACCELERATOR LABORATORY
UNITED STATES DEPARTMENT OF ENERGY

PPD/CDF UPGRADE
MUON - LOWER CMEX (MINI-SKIRT)
PIT STAND ASSEMBLY (NORTH WEST OR SOUTH EAST)

SCALE	DRAWING NUMBER	SHEET NO.	REV.
AS NOTED	2583.316-ME-382258	1 OF 1	