BELOW-THE-HOOK LIFTING DEVICE
Engineering Note Cover Page

PROPERTY NUMBER 86915

Lifting Device Numbers:

FNAL Site No.:_____ if applicable Div. Specific No.: 94 if applicable Asset No. _____ if applicable

ASME B30.20 Group: (check one)
- ˇ Group I Structural and Mechanical Lifting Devices
- ˇ Group II Vacuum Lifting Devices
- ˇ Group III Magnets, Close Proximity Operated
- ˇ Group IV Magnets, Remote Operated

Device Name or Description: MINOS SCINTILLATOR PANEL LIFTING FIXTURE

Device was: (check all applicable)
- ˇ Purchased from a Commercial Lifting Device Manufacturer
  mfg. name: CMCI PRODUCTS
- ˇ Designed and Built at Fermilab
- ˇ Designed by Fermilab and Built by a Vendor
  Assy drawing number: _____
- ˇ Provided by a User or Other Laboratory
- ˇ Other. Describe: _____

Engineering Note Prepared by: JAMES KILMER Date: 6/3/99

Engineering Note Reviewed by: Richard Stanek Date: 6/24/99

Lifting Device Data:

Capacity: 2400 lb

Fixture Weight: 1200 lb

Service: ˇ normal ˇ heavy ˇ severe (refer to B30.20 for definitions)

Duty Cycle: _____ 8, 16 or 24 hour rating (applicable to groups III, and IV)

Inspections Frequency: _____

Rated Load Test by FNAL (if applicable): Date: _____ Load: _____

ˇ Check if Load Test was by Vendor and attach the certificate.

Satisfactory Load Test Witnessed by: _____

Signature (of Load Test Witness): _____

Notes or Special Information:

SEE ORIGINAL. DID A 3000 lb TEST LIFT

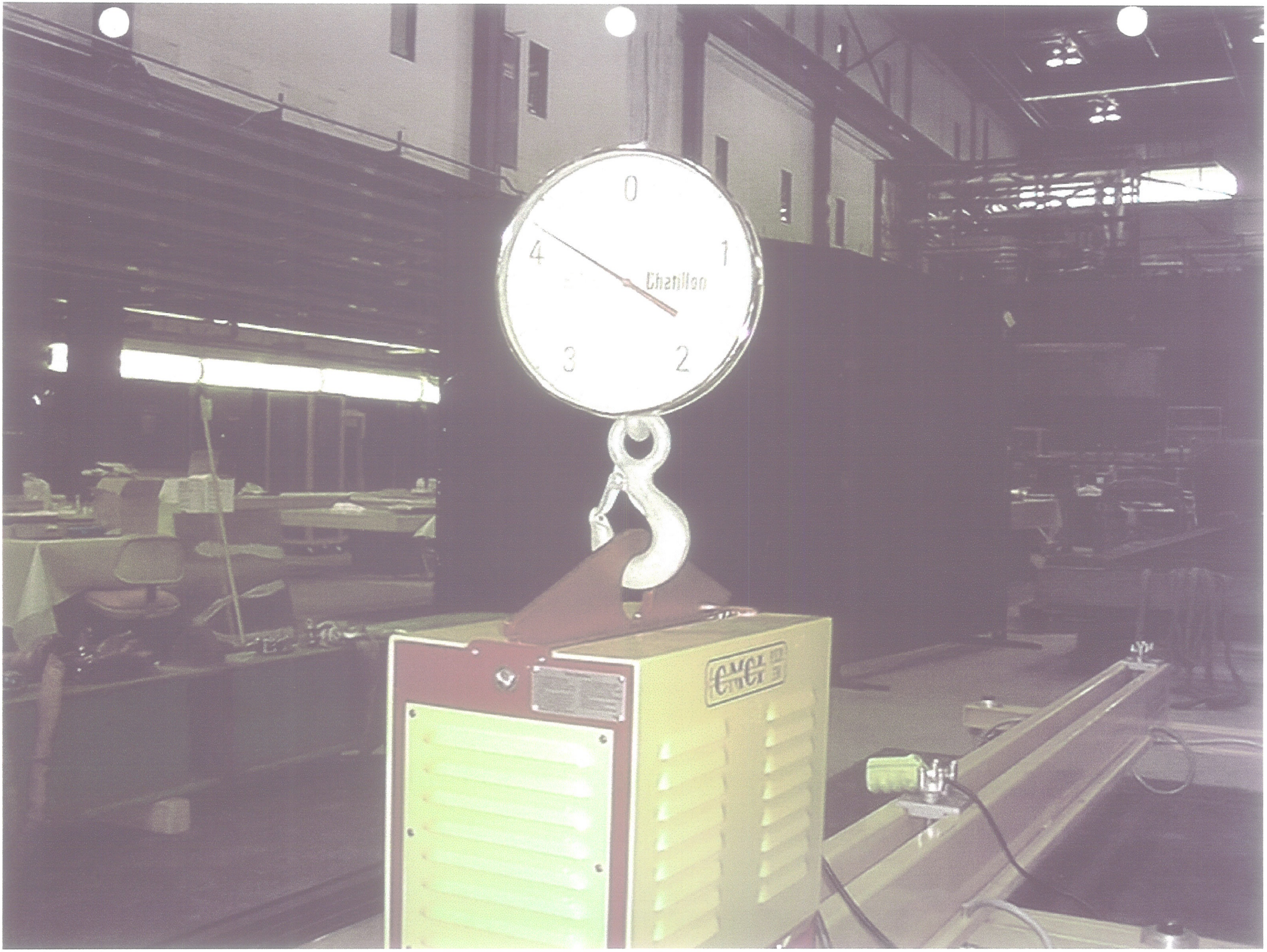
0
1
2
3
4
Chatillon

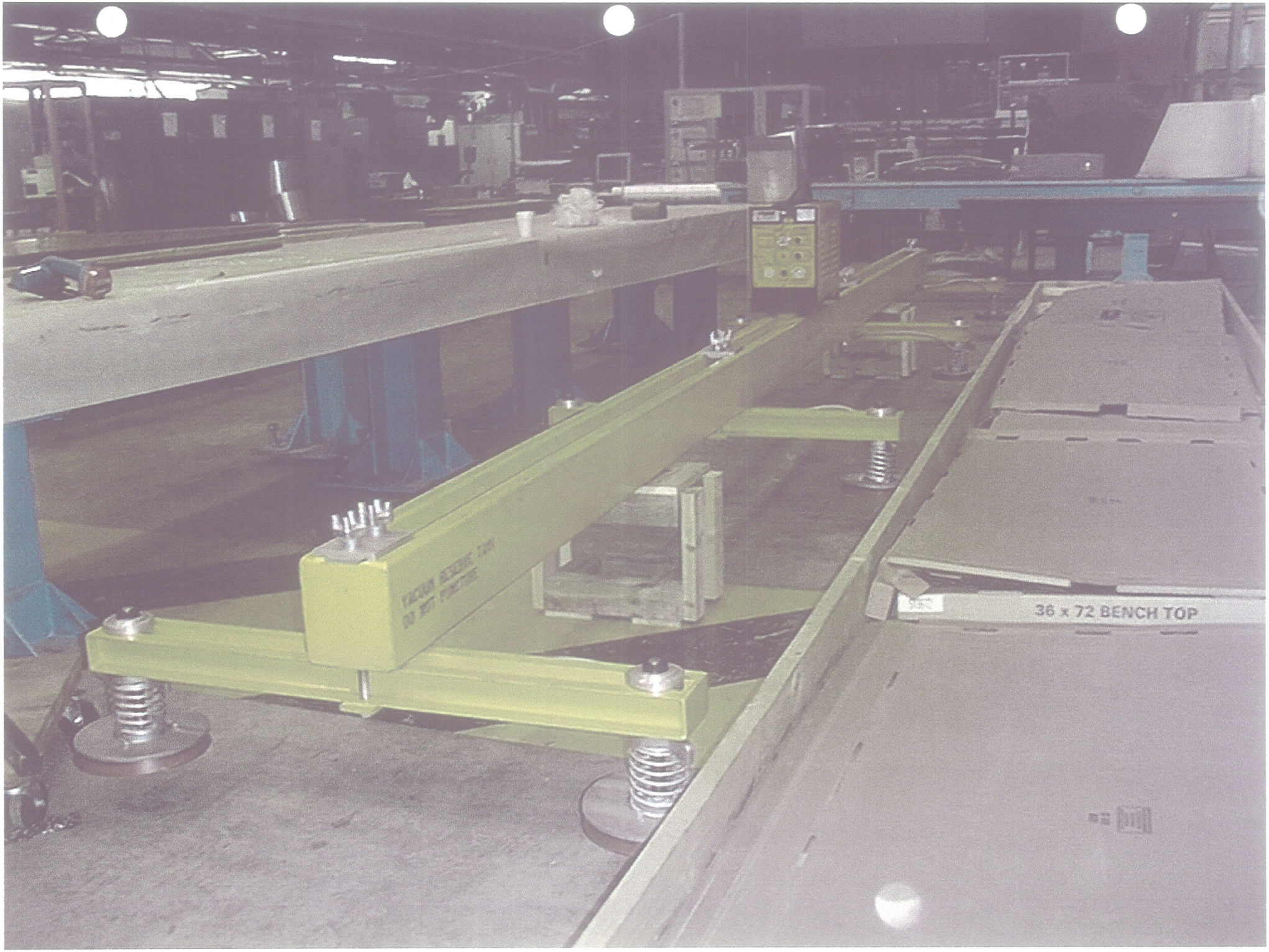
36 x 72 BENCH TOP

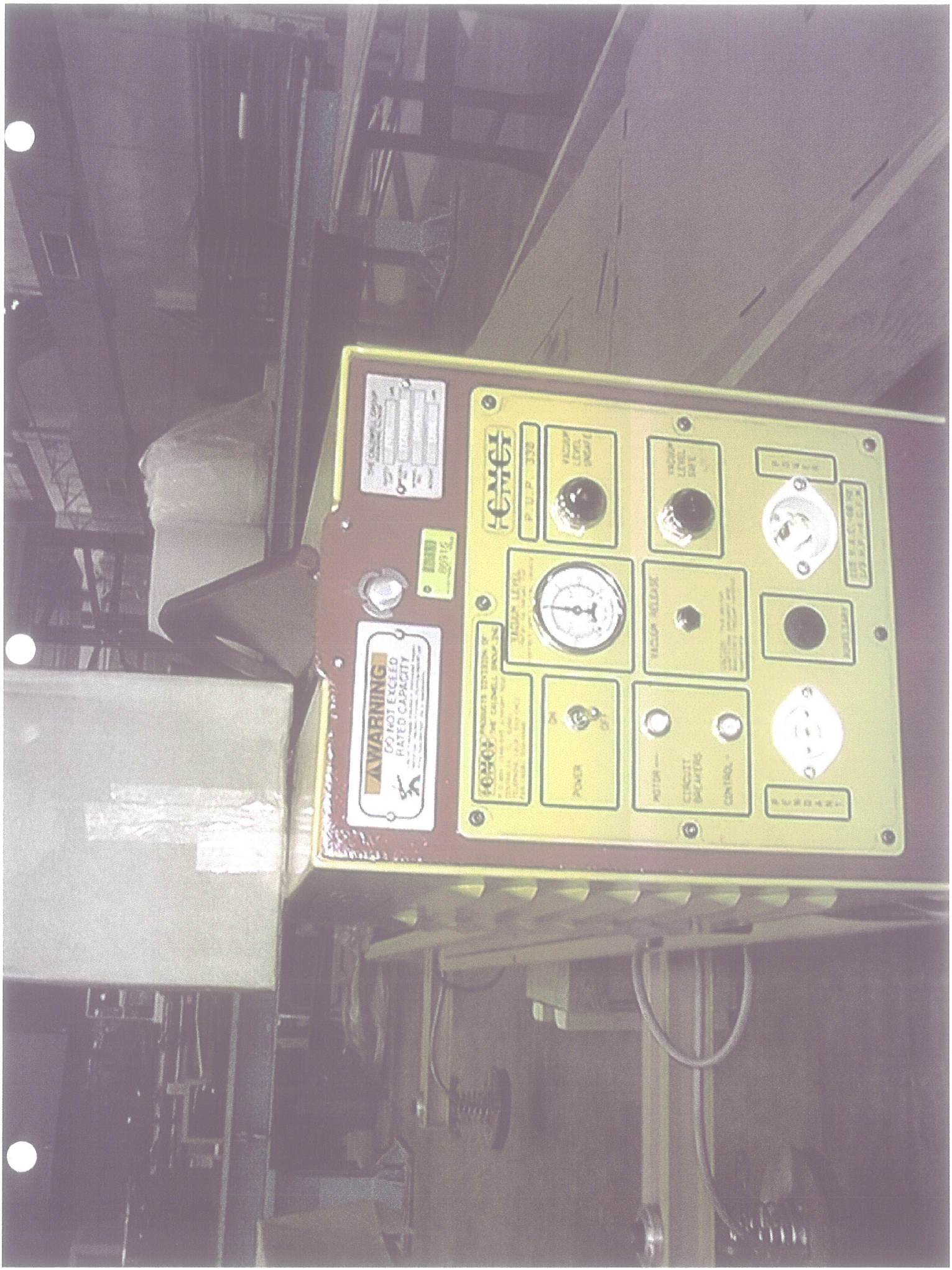
WARNING
DO NOT EXCEED
RATED CAPACITY
POWER
MOTOR
CIRCUIT BREAKERS
CONTROL

PAD CAP 300 LBS EACH
UNIT CAP 2400 LBS MAX
AT 3:1 SAFETY FACTOR

Products Division of
THE CALDWELL GRO
645 Airport R
Centralia
Phon

Post-it® Fax Note 7671

To Jim Kilmer	Date
Co./Dept. Fermilab	From
Phone #	Co.
Fax # 630-840-3694	Phone #
	Fax #
	# of pages

ION REPORT

VACUUM UNIT

CMCI S.O. # 04919 CUSTOMER P.O. 521139

DATE: 5-27-99

TO:
FERMILAB
BOX 500
BATAVIA, IL 60510

SHIP TO:
FERMILAB
RECEIVING WAREHOUSE #2
KIRK ROAD & WILSON ST.
BATAVIA, IL 60510

UNIT TYPE: PUP-330 POWER SUPPLY: 115V.-1Ph-60HZ

LOAD BEAM SIZE & LENGTH: SIZE 2 25'-0" LG

CROSSARMS: (4) 4'-0" LG. PAD(S) NO. & TYPE: VPN-8-30

90 U.E. - ROTATION SPEED: — SEC. 0 -90 — 90 -0

OVERTRAVEL HORIZONTAL & VERTICAL: — OK

APPEARANCE: WELDS OK PAINT OK

VACUUM LEAKAGE TEST - POWER PAC ONLY:

START/FINISH IN.HG.: / TEST DURATION: _____ MIN.

VACUUM LEAKAGE TEST - COMPLETE UNIT:

START/FINISH IN.HG.: 24 / 24 TEST DURATION: 2+ MIN.

MARKS/STENCILS: CAPACITY ✓ OK LOGO ✓ OK DATA PLATE ✓ OK

SHIPPING INFORMATION: WIDTH 4'-0" LENGTH 25'-0" HEIGHT 46" WEIGHT 1200
TARP: ✓ YES ___ NO

UNIT INSPECTED BY: MFG. LEM ENGINEER. _____ SALES EJM

UNIT READY TO SHIP: YES _____ NO _____ SHIPPING WT 1300#

REMARKS: LEAK TEST 4 PADS AT A TIME PROOF TEST REQ'D 3000# PLUS UNIT WT.

CMCI UNIVAC™

Hook suspended

- 7 standard models powered by Venturi (shop air) or electric to choose from:
  - single pad units
  - multiple pad units with and without cross arms
  - 90° tilt upender/ downenders
- Custom engineered units to your specification.
- Automated transfer systems (pick and place)
- Uniclamp™ Hold Down clamps

THE CALDWELL GROUP

Copyright © 1999, The Caldwell Group, Inc., Rockford, Illinois

CMCI Quality and Engineering in Every Lift

Air Powered

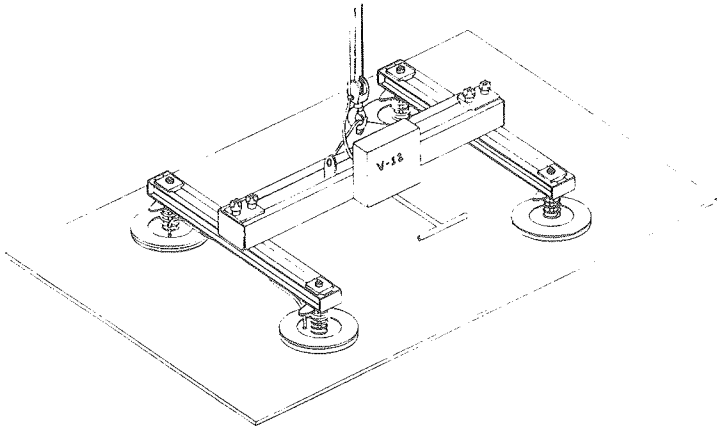

Venturi (Shop Air)

Electric Powered

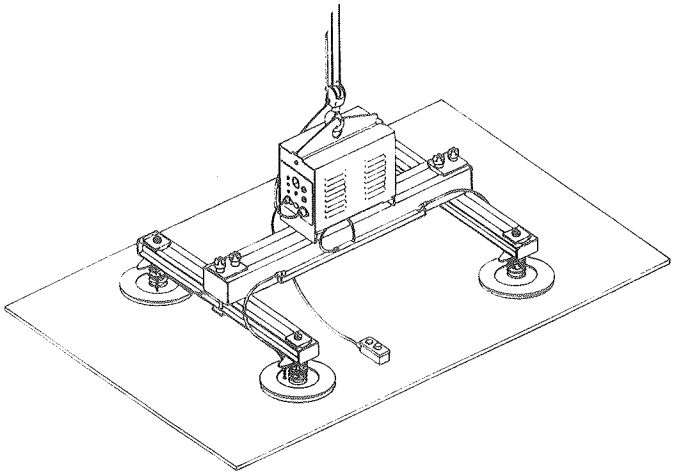

115v or 230/460v

CMCI's Vacuum Lifters adhere to the highest quality standards in the industry. CMCI engineered its standard horizontal units to an **industry leading 3 to 1 vacuum safety factor** (5 to 1 on the structural components). On CM upenders/downenders the vacuum safety factor is 6 1 in the horizontal position and 3 to 1 in the vertical position. While CMCI has standard models, its engineers are always available to custom design a unit to your specific application... including pick and place automated transfer systems. All units **conform to ASME B30.20 and OSHA standards**.

CMCI Vacuum Lifters are designed for efficient one person operation in lifts of **semi-porous and non-porous material.** Vacuum units will not mark or scratch material surfaces or edges, as magnets and edge grabs will do.

Additionally, CMCI vacuums will lift thin sheets (under 1/4") one at a time or nonferrous metals, unlike magnets.

Whenever materials need to be stacked, stored, loaded, unloaded or transferred ...**think CMCI Vacuum Lifters**.

CMCI Vacuum Lifters

- Increase productivity reducing cost.
- Are single operator run.
- Eliminate material damage.
- Make precision handling easy.
- Allow versatile handling of most materials.
- Improve storage space.
- Provide a low maintenance lifter.
- Increase safety to operator and machinery.
- Are durable for long lasting service.
- Have rated capacities and safety warnings displayed on both sides of equipment. Lettering is clearly visible from floor.
- Are registered with metal tags attached to each lifter.

Industry users

CMCI Vacuum Lifters are applicable to most industries. A short list of industries CMCI has served is primary metal, metal fabricators, aircraft, glass, plastics, automotive, paper, instruments, electrical equipment, construction machinery, and nuclear.

DISCLAIMER:
All product designs subject to change without notice. Items pictured in this catalog are a representation of a specific application design. Due to variations in applications, the product you purchase could be designed differently than depicted in this catalog.

PRODUCTS DIVISION OF
THE CALDWELL GROUP, INC.
P.O. BOX 1540 - 645 AIRPORT ROAD
CENTRALIA, IL. 62801-1540
PHONE 618-533-CMCI FAX 618-533-4448

PUP-330

operation,
maintenance &
parts manual

PURCHASER FERMI NATIONAL LAB

PURCHASE ORDER # 521139

SHOP ORDER # 04919

REFERENCE #

MODEL NUMBER FE24V825Q4

CREATIVE MATERIAL CONTROL, INC.
P.O. Box 1540
Centralia, IL 62801
Phone (618) 533-2624

PUP 330 - Operation, Maintenance & Spare Parts Manual

INDEX

BELOW/HOOK LIFTERS CHECK LIST....23

COMPONENT DESCRIPTION....9
- CONTROL & MONITORING SYSTEM....13
- MAIN VACUUM SYSTEM....9
- VACUUM RESERVE SYSTEM....12

EQUIPMENT DESCRIPTION....7
- PUP 330 SERIES LIFTER....7

EXPLODED VIEW OF COMPONENTS....25

EXPLODED VIEW OF UNIT....2

INTRODUCTION....3

KEY FACTORS....24

OPERATING INSTRUCTIONS....6

OPERATING PRINCIPLES....4

PERIODIC MAINTENANCE....15
- DAILY....15
- WEEKLY....15
- QUARTERLY....15
- PERFORMING PROOF LOAD TEST....15
- PERFORMING FILTER & MUFFLER CHECK....16
- FLUSHING VACUUM PUMP CHAMBER....17

RECEIVING....3

RECOMMENDED SPARE PARTS....26

STORAGE....3

TRACING LEAKAGE....17

TROUBLESHOOTING GUIDE....19

CREATIVE MATERIAL CONTROL, INC.
P.O. Box 1540
Centralia, IL 62801
Phone (618) 533-2624

PUP-330 Operation, Maintenance & Spare Parts Manual

INTRODUCTION

Your CMCI PUP 330 Series Vacuum Lifter has been carefully designed to provide dependable service in a demanding application. The operating instructions included in this manual will help you obtain maximum performance and safety from your unit. Reading and following the directions in the maintenance section will insure your unit of a long and productive life.

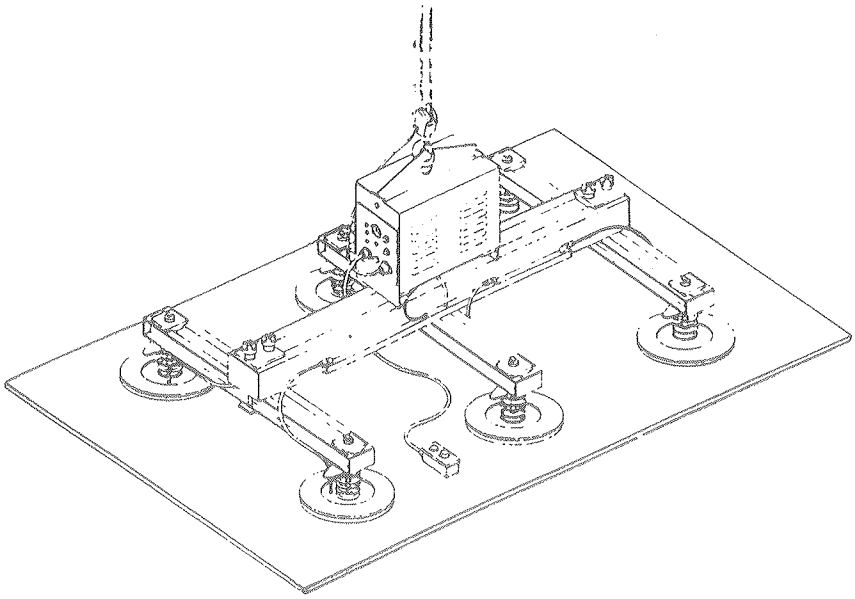

RECEIVING INSPECTION AND TESTING

Your CMCI PUP 330 series Lifter should be checked on arrival for shipping damage. REPORT ANY DAMAGE IMMEDIATELY TO THE CARRIER'S AGENT.

Your unit may have been disassembled for shipping. It should be reassembled and checked for loose clamps, vacuum hoses, nuts and bolts.

Prior to putting your Lifter into routine operation, read the operating instructions and perform the "PROOF LOAD TEST" as described in this manual.

STORAGE

DO NOT store your Lifter for any appreciable length of time by allowing it to rest on the vacuum pads. To do so will shorten the life of the seal rings. The unit must be supported by the load beam on lifting yoke.

CREATIVE MATERIAL CONTROL, INC.
P.O. Box 1540
Centralia, IL 62801
Phone (618) 533-2624

PUP-330 Operation, Maintenance & Spare Parts Manual

Because the check valve in the reserve tank line prevents air from flowing into the vacuum reserve tank during the release cycle, it is not necessary to re-evacuate the tank each time a load is lifted. This reduces the attach time required after the initial evacuation of the reserve tank.

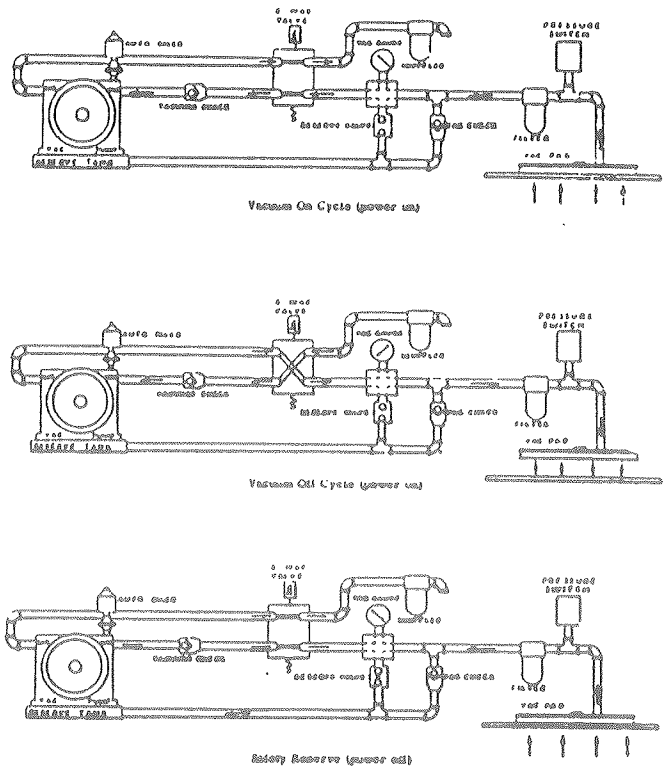

FIG. 1

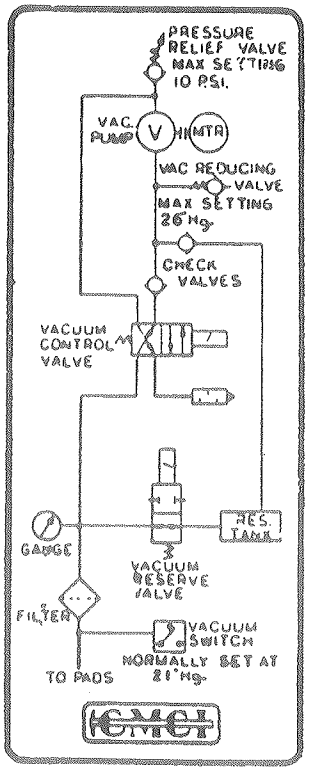

FIG. 2

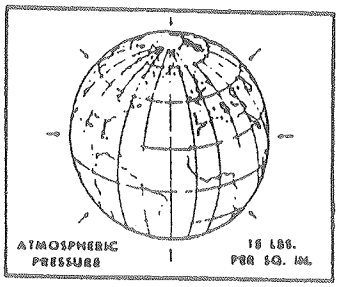

The atmospheric pressure, in which we all exist, has been harnessed to perform a service for you in modern industry. This service is accomplished by removing atmospheric pressure from between two objects, creating a vacuum and bonding the two objects together as one. The literal definition is "A space entirely devoid of matter."

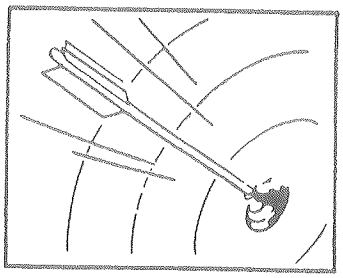

A simple illustration would be a small rubber vacuum pad attached to children's toys. When this pad is pressed down on a flat surface, the downward movement of the pad forces the air from between the flat surface and the rubber pad, creating a simple vacuum.

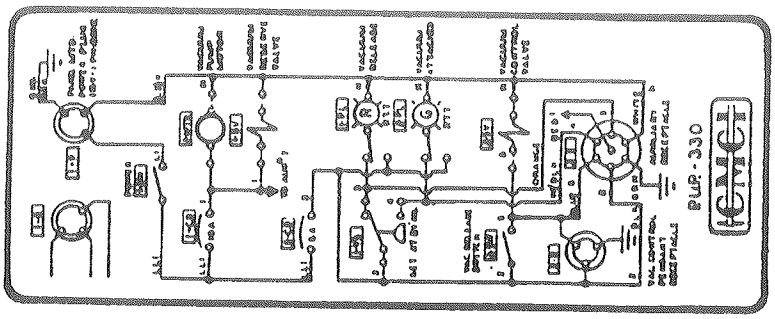

FIG. 3

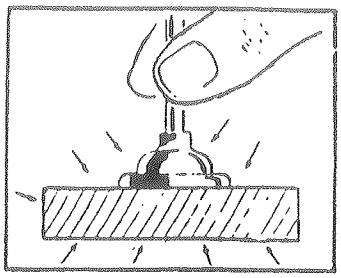

By lifting this small rubber pad, objects can be raised and lowered. This can be accomplished as long as the outside air is not allowed to enter between the two surfaces. The pad is just the means of creating a vacuum, and sealing out the surrounding air.

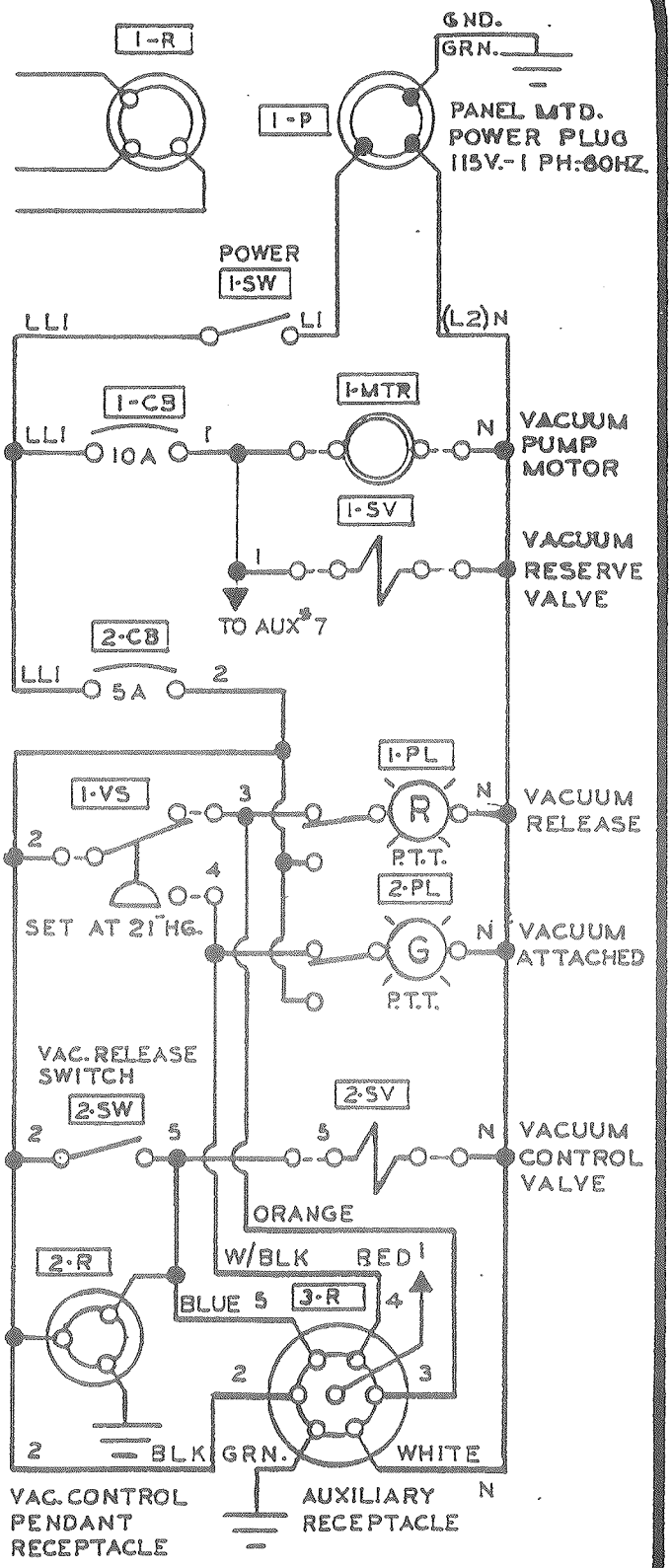

P.U.P.-330

CMCI

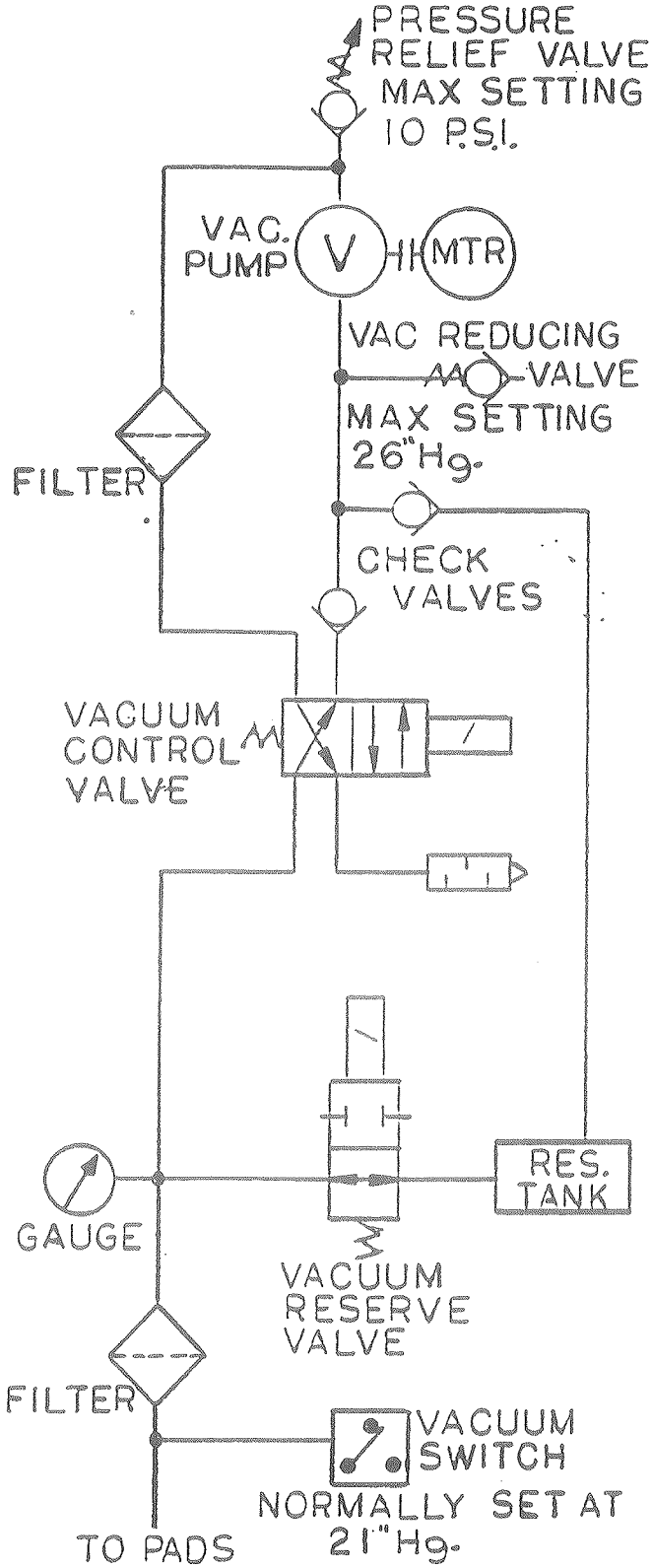

CMCI

CREATIVE MATERIAL CONTROL, INC.
P.O. Box 1540
Centralia, IL 62801
Phone (618) 533-2624

8. When the load has been lowered into its new position, push the Vacuum Release button on the control pendant. The vacuum will be released and the red lamp will light, indicating that Lifter is ready to be raised and repositioned on the next load. Raise Lifter slowly until all pads clear the load.

NOTE: The Vacuum On-Off switch on the control panel should be left in the Vacuum On position. It is provided primarily for maintenance purposes. In the Vacuum Off position it overrides the control pendant switches and holds the unit in the Vacuum Off condition.

EQUIPMENT DESCRIPTION

PUP 330 SERIES LIFTER

This unit supplies and controls the vacuum used to attach the lifting pads to the load. It houses a vacuum pump, vacuum reserve tank, direct solenoid-operated vacuum control valve, vacuum reserve valve, check valves, filter, muffler, and the main control panel with its indicators and switches.

The vacuum reserve system is a safety feature which prevents sudden loss of vacuum in the event of a power or equipment failure.

Mounted on the control panel are the main power switch, a Vacuum On-Off switch, red and green vacuum level indicator lights, and a combination vacuum and pressure gauge to aid in checking equipment performance. Two circuit breakers are also mounted on this panel, one for the vacuum pump motor and vacuum reserve valve and one for the lights and control circuits. The circuit breakers are readily accessible in case of difficulty.

Access to the vacuum pump, filter, muffler, valves, vacuum switch, etc. chamber is provided by two full length covers, one on each side, which hinge at the top and are held down at the bottom by ceramic magnets. To raise the cover, grip it at or near the lower corners and pull. Each ceramic magnet has a 5lb. holding force.

The cover may quickly be removed by raising it and by pulling the latch-hinge plungers.

To open the control panel box, remove six screws holding the control panel on and remove panel being careful not to tangle the wiring harness. Two flat head machine screws hold the control box in place while the cover is loose. Power should be disconnected before removing the control panel. Caution should be used when laying loose control panel aside to insure that none of the panel mounted components are damaged.

CREATIVE MATERIAL CONTROL, INC.
P.O. Box 1540
Centralia, IL 62801
Phone (618) 533-2624

COMPONENT DESCRIPTION

The following paragraphs provide data on the components and sub-assemblies which make up your PUP 330 Series Unit. Instructions for performing adjustments and repairs are included.

1. MAIN VACUUM SYSTEM

   A. VACUUM PUMP: The vacuum pump incorporated in your PUP 330 Series Lifter is rotary vane, oil-less type. It is designed for continuous duty under 26" Hg. vacuum; operating temperatures up to 230° F are normal. *NEVER LUBRICATE AN OIL-LESS VACUUM PUMP.* The carbon vanes and sealed motor bearings require no oil.

   The pump vanes are made of hard carbon and are precision ground. They should last 5,000 to 10,000 hours, depending upon the vacuum level at which the pump is run. Routine checking and replacing of filter and muffler as well as periodic flushing of the pump chamber will help prolong vane life. For flushing instructions, refer to periodic maintenance section of this manual.

   The four vanes can readily be replaced by removing the end plate shroud and exchanging new for worn or broken vanes. Use compressed air to clean out the pump chamber prior to inserting new vanes, especially if one of the old vanes has broken.

   Sometimes when a vane breaks a piece will wedge between the top of the rotor and the body, opening the top clearance. The clearance, which should be .002", may be checked with a feeler gauge. The rotor should be turned while the clearance is being checked so that all points of the circumference will clear. To reduce the top clearance to .002", tap *VERY LIGHTLY* on the top of the body with a miniature hammer.

   NEVER remove the rotor. *DO NOT* loosen the bolts on either the body or mounting brackets as this will alter the preset clearance between the rotor and these parts. Under most circumstances rotor and tolerance ring should not be replaced in the field.

WARNING: When servicing, all power to the motor must be de-energized and disconnected. All rotating components must be at a standstill.

DANGERS: To prevent explosive hazard, DO NOT pump combustible liquids or vapors with this pump.

CREATIVE MATERIAL CONTROL, INC.
P.O. Box 1540
Centralia, IL 62801
Phone (618)533-2624

C. PRESSURE RELIEF VALVE: This valve is located on the exhaust side of the vacuum pump, between the pump and the four way control valve. Its purpose is to prevent pressure buildup at the pump. This condition can occur during the "Vacuum Off" cycle if all of the pad valves are closed or if the filter or vacuum line is clogged. This valve should NOT be set to release at a pressure greater than 10 PSI.

D. VACUUM RELIEF VALVE: This valve is located on the inlet side of the vacuum pump, between the pump and the four way control valve. Its purpose is to limit vacuum buildup at pump to 26" Hg. This is the maximum continuous rating of the vacuum pump.

E. CHECK VALVE: One of the check valves used in the PUP 330 Series Lifter is located between the vacuum pump intake port and the four way valve. It is installed so as to permit air to be pumped from the vacuum system, but to prevent air from entering the system when the vacuum pump is not running. Unit is equipped with a viton seal which has an operating temperature range of from -20° to 350° F. Maximum cracking pressure is 1 PSI.

F. FILTER AND MUFFLER: The vacuum filter is located in the vacuum line between the pads and the four way control valve. It prevents dirt and foreign matter from entering the vacuum pump and valves.

The muffler serves two purposes. During the "Vacuum On" cycle, it reduces the noise of the vacuum pump exhaust. In the "Vacuum Off" condition, it filters the release air entering pump.

It is very important to keep both the filter and the muffler in good condition to insure maximum system efficiency and long pump life. Refer to periodic maintenance section of this manual for maintenance of these components. Just twist off the old element and twist on the new. No bolts to remove. No time-consuming cleaning operations. Takes less than a minute to change. Disposable filter element pays for itself with lower maintenance and downtime costs. The 3 PSI isolated by-pass valve in the cast aluminum housing head prevents more than a 6" Hg. vacuum drop in event filter clogs.

CAUTION: These filters may reach a temperature of 230 degrees F.

C. VACUUM RESERVE VALVE: The check valve is paralleled by a solenoid actuated, spring affect, normally open, two way valve which is connected as follows:

Port marked "2" - To tank
Port marked "3" - To Bottom "P" Port of 4-Way Control Valve

When energized, the valve is held in the closed position. The solenoid is fed directly from the vacuum pump power line, so that in case electrical power is lost to the vacuum pump motor the valve will open, connecting the vacuum reserve tank to the pad vacuum circuit.

D. COUPLING: Couples PUP 330 reserve tank to load beam tank. For further information, refer to item "H" above.

3. CONTROL AND MONITORING SYSTEM

A. TOGGLE SWITCHES: Two switches are included on the control panel. One is used to turn the PUP 330 on and off.

The second controls the operation of the four way valve to turn the vacuum on and off. It is wired in parallel with the pushbutton switch in the control pendant. The panel vacuum switch should be left in the "On" position, otherwise, it will override the pendant switch. It is provided for use during maintenance operations when the pendant is disconnected.

B. CIRCUIT BREAKERS: Two thermal circuit breakers are used, both located on the control panel. Circuit breaker No. 1 is rated at 5 amps; it protects the control circuit. Circuit breaker No. 2 is rated at 10 amps; it protects the pump motor. Power for the vacuum reserve valve is also fed through this breaker, so that, if the circuit breaker trips, the reserve valve will open connecting the vacuum reserve tank to the vacuum pad or pads.

These breakers have recessed reset buttons which cannot be manually pulled out to disconnect the circuit. *The button has a red band around it for visible trip indication.*

CREATIVE MATERIAL CONTROL, INC.
P.O. Box 1540
Centralia, IL 62801
Phone (618)533-2624

PERIODIC MAINTENANCE

Performing these few simple maintenance steps will prolong the life of your PUP 330 Series Lifter and will insure you of the greatest operating safety. It is recommended that this schedule be followed as closely as possible.

A. DAILY:

Perform filter and muffler check.
Perform proof load test.

B. WEEKLY:

Check seal rings, hoses, and fittings.
Check for loose bolts and nuts, as well as for structural damage.
Test vacuum gauge reading.
Test vacuum switch setting.
Lubricate pad slide valves with one drop of light oil on each side of slide valves and shift valve several times.
Lubricate load beams and accessories, if required.
CLEAN VACUUM 4-WAY CONTROL VALVE SPOOL (DO NOT LUBRICATE)

C. QUARTERLY:

Clean vacuum pump chamber by flushing. The PUP 330 Series Lifter requires no lubrication.
DO NOT ATTEMPT TO LUBRICATE THE MOTOR OR PUMP ASSEMBLY.
Check vacuum gauge for accuracy using an accurate test gauge assembly.
Check red and green indicator light operation level with an accurate test gauge assembly.

D. PERFORMING PROOF LOAD TEST:

The proof load test should be conducted daily to verify that the PUP 330 Series Lifter safety features are operating properly. In effect, the test simulates an electrical power failure so that the performance of the vacuum reserve system can be checked.

1. Position your PUP 330 Series Lifter over a sheet of nonporous material such as steel or aluminum.

2. Adjust the crossarms and the vacuum pads to properly support the load.

CREATIVE MATERIAL CONTROL, INC.
P.O. Box 1540
Centralia, IL 62801
Phone (618)533-2624

PUP-330 Operation, Maintenance & Spare Parts Manual

F. FLUSHING VACUUM PUMP CHAMBER:

After a period of time, foreign material will collect in the pump chamber, since the filters cannot trap all impurities. Periodic flushing of the pump will remove most of the trapped material.

Flushing is accomplished by disconnecting the two hose stems that connect the two hoses from the vacuum pump to the four way vacuum control valve. Run serveral teaspoons of solvent* into the intake hose while pump is operating. Repeat the flushing procedure two or three times. After all the solvent has passed through the pump, replace hose stems to their proper locations.

[redacted]

*[redacted].

WARNING: DO NOT use kerosene or other combustible solvents to flush unit. Use only Gast AH225B flushing solvent or equivalent.

TRACING LEAKAGE

Troubleshooting is always easier if one has a good understanding of how the equipment is intended to operate. The operating principles and piping and wiring diagrams located in this manual should be reviewed before repairing and servicing this unit.

A. TESTING FOR LEAKS:

Should the unit fail the *proof load test,* there is a leak somewhere in the vacuum system.

The location of the leak can most readily be determined by a process of elimination. Check the PUP 330 first; if it tests good, other sections of the vacuum system are connected one at a time until the leaky section is found. Disconnect the vacuum hose couplings connecting the PUP 330 to the load beam (or the vacuum pad in a single pad system). Perform a power-off vacuum test in the same manner as outlined for the proof load test; start the pump, switch the vacuum on and allow the gauge reading to increase to 25'' Hg. or higher. Then stop the pump and observe the gauge. If the reading drops more than 1'' Hg. in two minutes, the leak is located in the PUP 330. If not, the leak is in the piping to the vacuum pads, in the vacuum pads themselves, or the load beam reserve tanks.

CREATIVE MATERIAL CONTROL, INC.
P.O. Box 1540
Centralia, IL 62801
Phone (618)533-2624

PUP-330 Operation, Maintenance & Spare Parts Manual

TROUBLESHOOTING GUIDE

Successful troubleshooting involves, first careful observation of the symptoms and then elimination, one by one, of the possible causes of the trouble. The following chart provides a logical approach to troubleshooting your PUP 330. It is intended as a starting place to help isolate damage or defective parts of improper operating procedures.

PROBLEM	PROBABLE CAUSE	SOLUTION
1. Vacuum pump will not run	1. No power to unit	1. Check power source
	2. Tripped pump curcuit breaker	2. Reset if tripped. Check cause if tripping repeats
	3. Defective pump	3. Check vacuum pump
	4. Defective motor	4. Return vacuum pump for repairs
	5. Defective On-Off Switch	5. Check & replace if needed
	6. Loose or damaged wiring	6. Made visual or meter check
	7. Unit at extremely low temperature - moisture frozen	7. Bring unit to room temperature before starting
	8. Dirty vane chamber	8. Flush pump
2. Vacuum pump runs hot (above 230° F)	1. Excessive foreign matter in pump vane chamber	1. Flush pump assembly replace vanes if necessary
	2. Worn vanes	2. Replace
	3. Vanes hanging up	3. Check vanes & replace if necessary. Flush pump.
	4. Low incoming voltage	4. Check & correct as required
	5. High ambient temperature	5. Shield unit
3. No or low vacuum reading on vacuum gauge	1. Improper vacuum pad seal	1. Make visual check
	2. Clogged filter or muffler	2. Check & replace if required
	3. Damaged pad or seal ring	3. Make visual check
	4. Loose or damaged hoses or fittings	4. Make visual check & repair or replace as required.
	5. Defective gauge	5. Check or replace as required
	6. Defective gauge line	6. Check, clean or replace as required
	7. Defective 4-way valve	7. Check, clean or replace as required
	8. Pump vanes hanging up	8. Flush pump; replace vanes if necessary
	9. Defective pump	9. Return pump repair
	10. Porous or perforated material; rough, dirty and/or foreign particles on surface	10. Check unit on clean, nonporous material such as steel, aluminum

CREATIVE MATERIAL CONTROL, INC.
P.O. Box 1540
Centralia, IL 62801
Phone (618)533-2624

PUP-330 Operation, Maintenance & Spare Parts Manual

PROBLEM	PROBABLE CAUSE	SOLUTION
8. Excessive attach time	1. Clogged filter or muffler	1. Check & replace if necessary
	2. Improper vacuum pad seal	2. Make visual check
	3. Damaged vacuum pads or seal rings	3. Check for cracks, loose or broken bolts, cut or torn seal rings, or excessive seal ring wear, deformed seal
	4. Defective reserve system valving	4. Check & replace reserve valves if necessary
	5. Loose or damaged wiring on reserve valve	5. Check or replace as required
	6. Defective 4-way valve	6. Check, clean ro replace as required
	7. Vacuum pump vanes hanging up	7. Check & replace vanes if necessary; flush pump assembly
	8. Worn vacuum pump	8. Replace vanes or entire pump as needed
	9. Vacuum relief valve	9. Check for proper setting and operation
	10. Porous and/or perforated material	10. Test on non-porous material such as steel or aluminum
	11. Loose or damaged hoses or fittings	11. Make visual check
9. Excessive release time	1. Clogged filter or muffler	1. Check & replace if necessary
	2. Loose or damaged wiring on reserve valve	2. Check or replace as required
	3. Defective reserve valving	3. Check & replace reserve valves if necessary
	4. Defective 4-way valve	4. Check, clean or replace as required
	5. Vacuum pump vanes hanging up	5. Check vanes & replace if necessary
	6. Worn vacuum pump	6. Check & replace vanes on entire pump as needed
	7. Pressure relief valve	7. Check for proper setting & operation
	8. Clogged, loose or damaged hoses or fittings	8. Make visual check
10. Circuit breakers trip	1. Low incoming voltage	1. Check & correct required
	2. Short in the electrical circuit	2. Check & correct as required
	3. Pressure relief valve set above 10 PSI	3. Check & adjust as required
	4. Vacuum relief valve set above 26" Hg.	4. Check & adjust as required
	5. Vacuum pump freezing up	5. Check for broken vanes or foreign matter in assembly
	6. Defective vacuum pump	6. Return vacuum pump for repairs

CREATIVE MATERIAL CONTROL, INC.
P.O. Box 1540
Centralia, IL 62801
Phone (618)533-2624

BELOW/HOOK LIFTERS

Check List for Safe & Careful Operation

Use Lifter only after its functions and operations are fully understood

(Review manufacturer's operating instructions carefully.)

DO	Obey all stop signals - Regardless of who gives them	DON'T	Ride or allow any personnel to ride the load, or lifter, unless lifter has been designated a personnel lifter by the manufacturer
DO	Be sure load is free to lift	DON'T	Lift with worn, twisted, knotted or kinked slings
DO	Be sure lifter is full engaged with load and properly seated in lifting hook	DON'T	Use lifter as secondary crane hook or load beam
DO	Use lifter to handle only loads it was specified to handle	DON'T	Use lifter for other than specified applications
DO	Lift loads for proper balance	DON'T	Allow improper tipping of load
DO	Set load down gently	DON'T	Bang load down
DO	Be sure combined weight of lifter and load does NOT exceed the Hoist capacity	DON'T	Deface capacity, weight or any safety or instruction markings on lifter
DO	Operate within all equipment capacity	DON'T	Overload lifter or hoist or crane
DO	Be sure nothing can fall from load during lifting cycle	DON'T	Pick up a load having loose parts that could fall off
DO	Start lift gently	DON'T	Jerk or abuse equipment
DO	Operate within specified minimum and maximum load size ranges	DON'T	Pick up loads larger or smaller than specified dimension capabilities
DO	Pick up all loads with hoist line vertical	DON'T	Lift load with hoist line at an angle from true vertical
DO	Carry load over specified areas ONLY	DON'T	Carry loads over personnel
DO	Keep lifter clean and operational at all times	DON'T	Store lifter until it is clean and ready for reuse
DO	Store lifters in designated places for safety and their own protection	DON'T	Leave lifter suspended from crane hook with or without load - PARK IT
DO	Inspect lifter regularly for wear, damages, or missing parts	DON'T	Neglect "LITTLE" damages
DO	Mark lifter "OUT OF SERVICE" and report when any damage is noticed	DON'T	Remove an "OUT OF SERVICE" sign without supervisor's approval
DO	Keep full records on each lifter as to: INSTRUCTIONS, INSPECTIONS & SERVICE MODIFICATIONS	DON'T	Make alterations or modifications to lifter without manufacturer's written approval
DO	Train each new operator in the proper use of each lifter	DON'T	Only train the first operator and assume that he will train the next one

CREATIVE MATERIAL CONTROL, INC.
P.O. Box 1540
Centralia, IL 62801
Phone (618) 533-2624

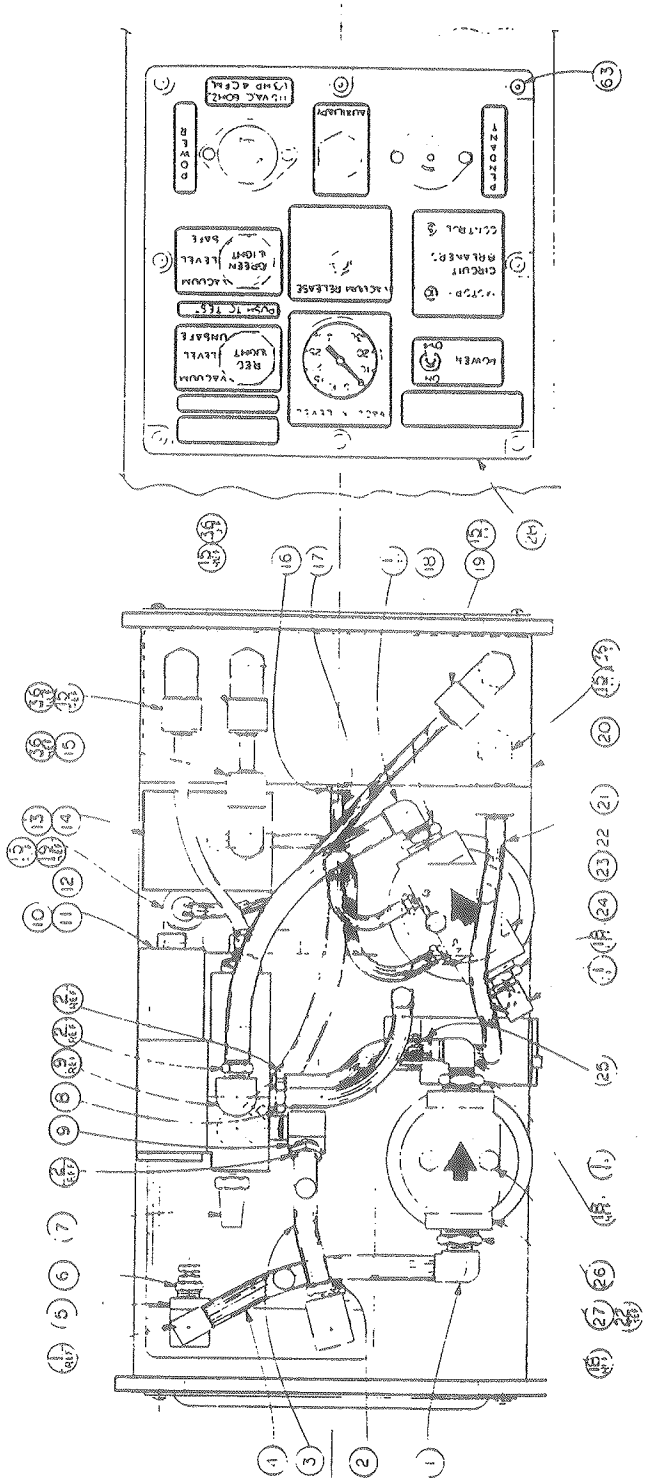

End Panel

Top View

PUP 330

CREATIVE MATERIAL CONTROL, INC.
P.O. Box 1540
Centralia, IL 62801
Phone (618)533-2624

PUP-330 Operation, Maintenance & Spare Parts Manual

Item No.	Qty Used	Rec. Stock	Catalog Number	Description	Price Each
1	5		129HB-6-4	¼ NPTM X ⅜ ID. 90° Hose Stem	
2	6		125HBL-6-6	⅜ NPTM X ⅜ ID. Hose Stem	
3	1		801-6	⅜ Pushlock Hose X Long	
4	1		801-6	⅜ Pushlock Hose X Long	
5	2		2225P-4	¼ NPT, Street Tee	
6	1	1	AA205	¼ NPT, Pressure Relief Valve	
7	1	1	MS-003A	⅜ NPT, Exhaust Muffler	
8	1		125HBL-4-6	⅜ NPTM X ¼ ID Hose Stem	
9	3		2202P-6-6	⅜ NPT, 90° Street Elbow	
10	1	1	153SA400K-1	4-way Control Valve Less Base	
		1	209-246A	Lapped Spool & Sleeve Assembly	
		1	228-829B	Solencid Assembly	
		1	204-217A	Solencid Override Assembly w/Light	
		1	MK15-K1	Repair Kit	
11	2		10-32 X ¾	Round Head Screw c/w Lockwasher	
12	1		801-6	⅜ Pushlock Hose X Long	
13	1	1	146-027-02	Vacuum Switch	
14	2		10-32 X ½	Round Head Screw c/w Lockwasher	
15	7		1501	½ NPT, 90° Adapter	
16	7		22BH-4-4	3/16 Bulkhead Union	
17	1		27042	.156 ID TUBING X 12" LONG	

CREATIVE MATERIAL CONTROL, INC.
P.O. Box 1540
Centralia, IL 62801
Phone (618) 533-2624

PUP-330 Operation, Maintenance & Spare Parts Manual

Item No.	Qty Used	Rec. Stock	Catalog Number	Description	Price Each
		1	C4-11AA	Coil	
		1	F2-OB	Repair Kit	
38	1		NU-250	¼ NPTM, Nipple Union	
39	4		¼-20 X ⅝	Hex-Head Capscrew c/w Lk & Ft Washer	
40	1		B-1021-1-3	Louver Panel	
41	8		10-32 X ⅜	Button Head, Socket Capscrew	
42	2		6-32 X ⅜	Round Head Screw	
43	2		3609T14	6" #91 Bright Finish Furnace Chain	
44	2		10-32 X ¾	Flat Head Socket Capscrew	
45	1		801-4	¼ Pushlock Hose X Long	
46	1		129HB-4-4	¼ NPT, X ¼ ID. 90° Hose Stem	
47	1		801-6	⅜ Pushlock Hose X 8" Long	
48	1		C3529 X 6	⅜ NPT, Steel 90° Elbow	
49	1	1	3-H21	⅜ NPTF, Coupling Socket	
50	1		3-K21	⅜ NPTF, Coupling Plug	
51	2		98412A122	½ X 4¾ Hitch Pin w/Cotter	
52	1	1	2-H16	¼ NPTF, Coupling Socket	
53	1		2-K16	¼ NPTF, Coupling Plug	
54	1		C3529 X 4	¼ NPT, Steel 90° Elbow	
55	2		219P-4	¼ NPT, Plug	
56	1		126HBL-6-6	⅜ NPTF X ⅜ ID. Hose Stem	

CREATIVE MATERIAL CONTROL, INC.
P.O. Box 1540
Centralia, IL 62801
Phone (618) 533-2624

PUP-330 Operation, Maintenance & Spare Parts Manual

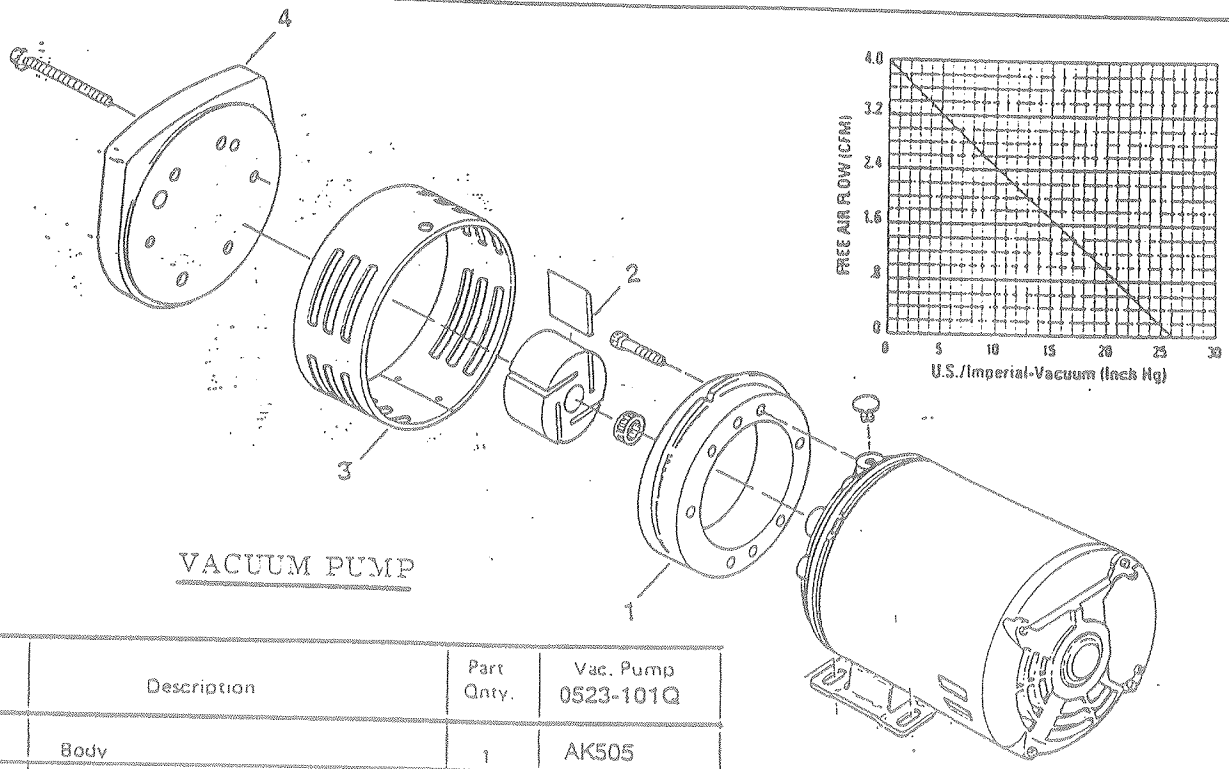

VACUUM PUMP

Ref. No.	Description	Part Qnty.	Vac. Pump 0523-101Q
1	Body	1	AK505
• 2	Vane	4	AH850A
3	Shroud	1	AK502
4	End Plate	1	AK501

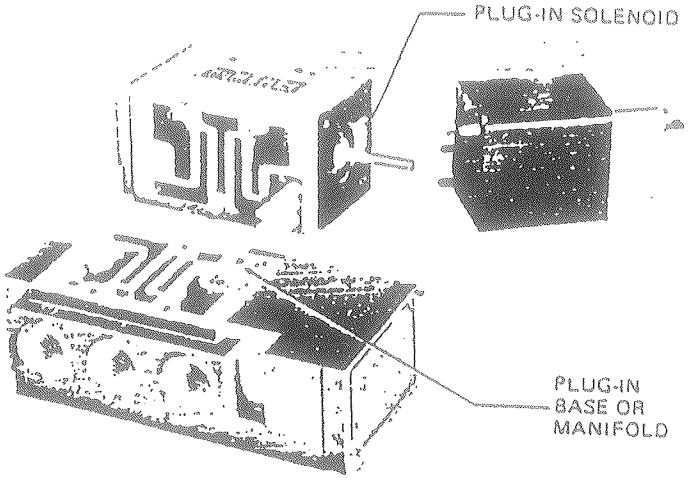

UNIT TO BASE
INTEGRAL PLUG

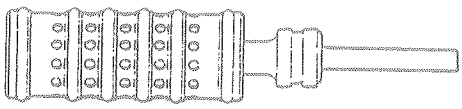

LAPPED SPOOL AND SLEEVE

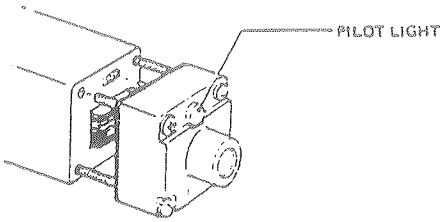

FOUR-WAY CONTROL VALVE

CREATIVE MATERIAL CONTROL, INC.
P.O. Box 1540
Centralia, IL 62801
Phone (618) 533-2624

PUP-330 Operation, Maintenance & Spare Parts Manual

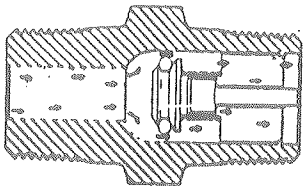

OPEN

Flow passes smoothly over poppet head with minimum turbulence and through the fluted guide without restriction.

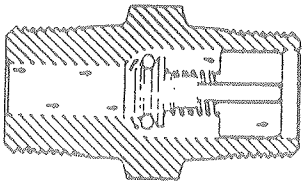

CLOSING

"O"-Ring automatically establishes line of contact with spherical seat to cushion closing and insure perfect sealing.

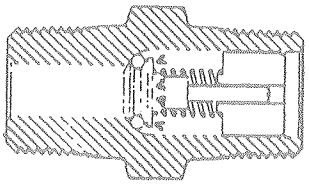

CLOSED

"O"-Ring only seals. Full pressure is carried by metal to metal seat. Increasing pressure increases sealing efficiency.

CHECK VALVE

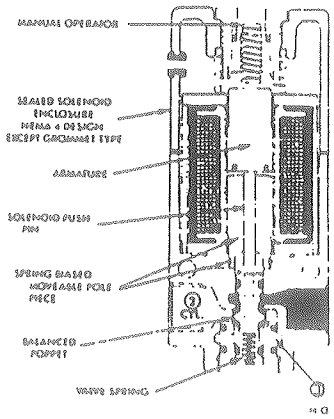

SOL. OPERATED, INLINE

The versatile 200 Series provides extremely fast shifting and long life in the following solenoid configurations

- 3-way, Normally Open and Normally Closed.
- 2-way, Normally Open and Normally Closed.
- Inline or add-a-unit manifold.
- UL Listed and CSA Certified models available. See Section T-3.
- Optional N.C. only models for heavy air line contaminant applications (see "Special Applications" on this page).
- Optional Explosion Proof models for hazardous environments (see "Special Applications" on this page).

VACUUM RESERVE VALVE

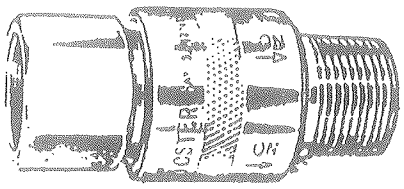

CAT. NO.	
1/8 NPT	3W-125
1/4 NPT	3W-250
3/8 NPT	3W-375
1/2 NPT	3W-500

SPARE PARTS

	SNAP RING	SLEEVE O-RING	BODY O-RING
3W-125	S163-43	111*	011
3W-250	S163-56	113*	013
3W-375	S163-69	115*	015
3W-500	S163-109	120*	020

*2 Req'd.

THREE-WAY HAND-OPERATED SHUT-OFF VALVE

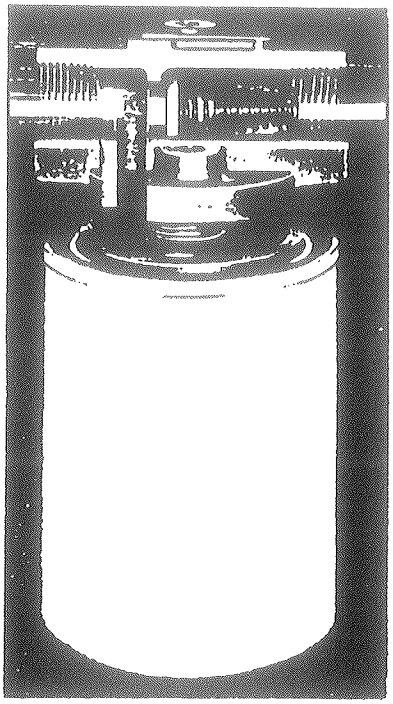

FILTER/MUFFLER