BELOW-THE-HOOK LIFTING DEVICE
Engineering Note Cover Page

Lifting Device Numbers: ID #92

FNAL Site No.:_____ if applicable Div. Specific No.: _____ if applicable Asset No. _____ if applicable

ASME B30.20 Group: (check one)
- ✓ Group I Structural and Mechanical Lifting Devices
- Group II Vacuum Lifting Devices
- Group III Magnets, Close Proximity Operated
- Group IV Magnets, Remote Operated

Device Name or Description: SAMUS MAGNET(S) LIFTING DEVICE ('C' FRAME)

Device was: (check all applicable)
- Purchased from a Commercial Lifting Device Manufacturer
  - mfg. name: _____
- ✓ Designed and Built at Fermilab
- Designed by Fermilab and Built by a Vendor
  - Assy drawing number: _____
- Provided by a User or Other Laboratory
- Other. Describe: _____

Engineering Note Prepared by: H. STREDDE Date: 6.27.90 REV. 7.15.98

Engineering Note Reviewed by: [signature] Date: 2/26/99

Lifting Device Data:

Capacity: 38 TONS

Fixture Weight: 3.5 TONS

Service: normal heavy severe (refer to B30.20 for definitions)

Duty Cycle: _____ 8, 16 or 24 hour rating (applicable to groups III, and IV)

Inspections Frequency: _____

Rated Load Test by FNAL (if applicable): Date: 2.23.99 Load: 48 TONS

Check if Load Test was by Vendor and attach the certificate.

Satisfactory Load Test Witnessed by: Donald A Golostine

Signature (of Load Test Witness): Donald A Golostine

Notes or Special Information:

D0 ENGINEERING NOTE

3823.132-EN-502

SAMUS TOROID INSTALLATION FIXTURE

H. Stredde

June 27, 1990
revised July 15, 1998

Approved: _____

The SAMUS (Small Angle Muon System) toroids have been designed and fabricated in the USSR and delivered to D0 ready for installation into the D0 detector. These toroids will be installed into the aperture of the EF's (End Toroids).

The aperture in the EF's is 72" vertically and 66" horizontally. The Samus toroid is 70" vertically by 64" horizontally by 66" long and weighs approximately 38 tons. The Samus toroid has a 20" by 20" aperture in the center and it is through this aperture that the lift fixture must fit. The toroid must be "threaded" through the EF aperture. Further, the Samus toroid coils are wound about the vertical portion of the aperture and thus limit the area where a lift fixture can make contact and not damage the coils. The fixture is designed to lift along a surface adjacent to the coils, but with clearance to the coil and with contact to the upper steel block of the toroid. The lift and installation will be done with the 50 ton crane at D0.

The fixture was tested by lifting the Samus Toroid 2" off the floor and holding the weight for 10 minutes. Deflection was as predicted by the design calculations.

Enclosed are sketches of the fixture and it relation to both Toroids (Samus and EF), along with hand calculations and an Finite Element Analysis. The FEA work was done by Kay Weber of the Accelerator Engineering Department.

FIXTURE MODIFICATION- Removal of SAMUS Toroids

The Samus toroids are to be removed from the EF toroids for run II. These toroids were installed before the B & C-layer PDT's were installed on top of the EF's. The original installation fixture was built to clear the top surface of the EF and therefore has to be modified in length in order to clear the top layer PDT's. This results in a change in length of 64". The fixture will be cut in the center and an appropriate section of material added by welding to provide the needed length.

The fixture will be tested by using a hydraulic cylinder and two columns to fill the gap of the fixture "C" frame. Pressure will be applied to the cylinder to provide a force of 48 tons on the fixture. (38 x 1.25).

Sketches of the modified fixture and test apparatus are included, along with the appropriate calculations that are indicated by * in the revised copy.

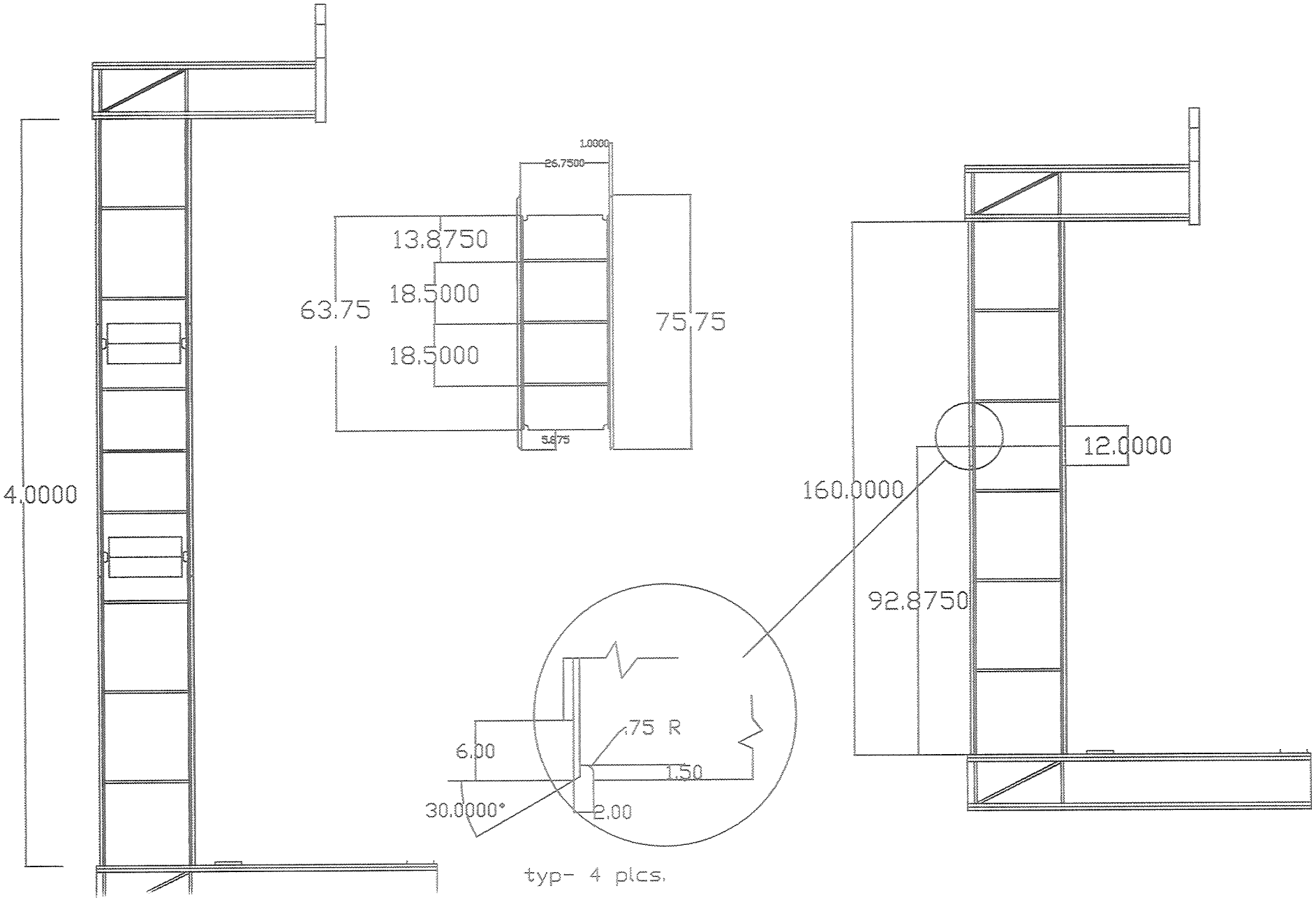
4.0000
1.0000
26.7500
13.8750
18.5000
18.5000
63.75
75.75
5.675
160.0000
12.0000
92.8750
.75 R
6.00
1.50
30.0000°
2.00
typ- 4 plcs.

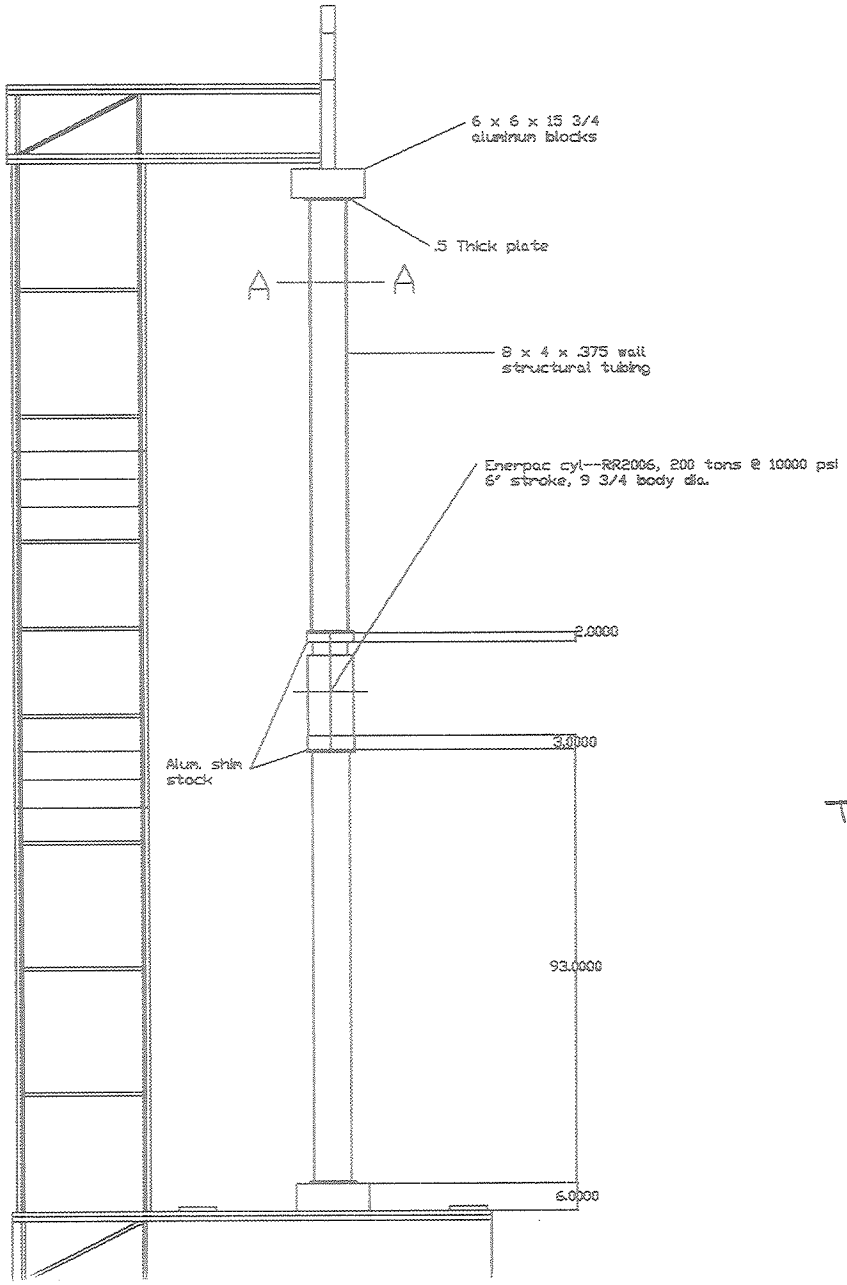

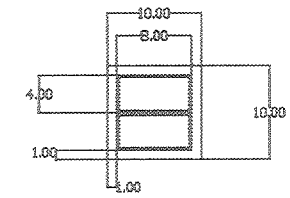

SECT A-A

TEST LOAD 96000 LBS.

DEFLECTION ≈ .438"

2-23-99

H. STREDDE

FERMILAB
ENGINEERING NOTE

SECTION	PROJECT	SERIAL-CATEGORY	PAGE
			1/

SUBJECT: SAMUS INSTALLATION FIXTURE (NO PROPORTIONAL DRIFT TUBES INSTALLED)

NAME: H. STREDDE

DATE: 11-6-89 | REVISION DATE: 7.15.98 *

SCALE: 3/8" = 1.0

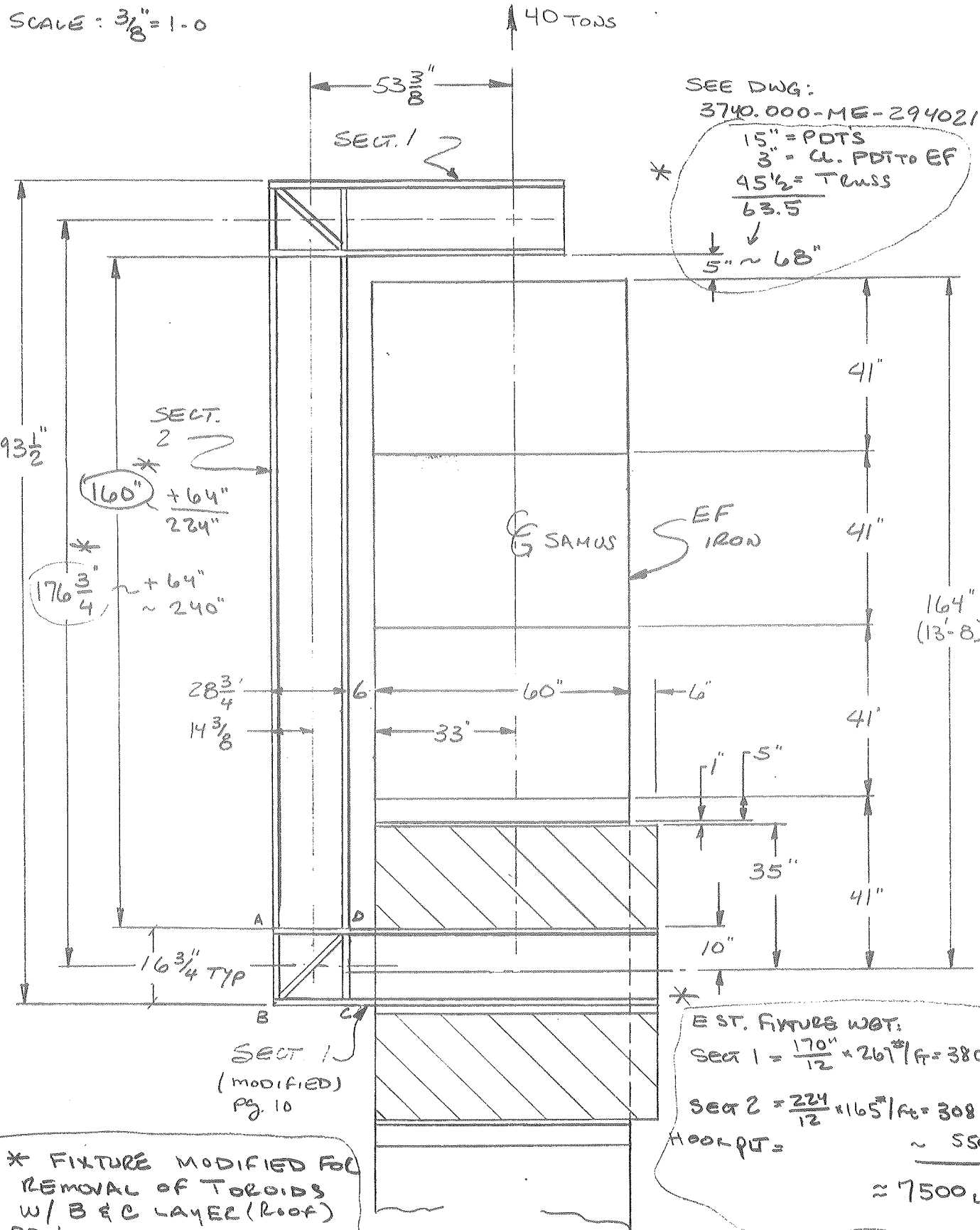

EST. FIXTURE WGT.:

SECT 1 = 170"/12 × 267#/FT = 3800

SECT 2 = 224/12 × 165#/FT = 3080

HOOK UP = ~ 550

≈ 7500 LBS

* FIXTURE MODIFIED FOR REMOVAL OF TOROIDS W/ B & C LAYER (ROOF) PDT'S IN PLACE

FERMILAB
ENGINEERING NOTE

SECTION	PROJECT	SERIAL-CATEGORY	PAGE
			1A/

SUBJECT

NAME: H. J. STREDDE

DATE: 5/10/90

REVISION DATE:

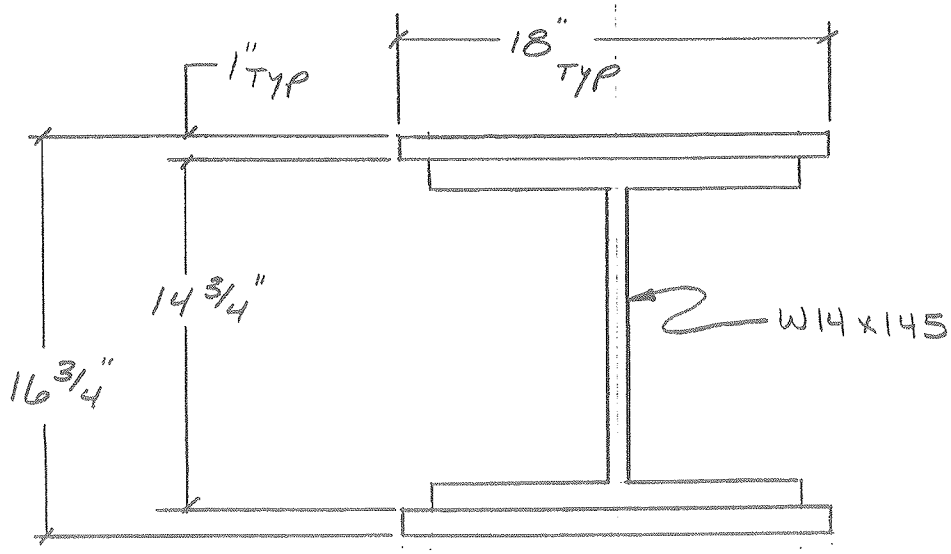

SECTION PROPERTIES

$I = 3942\ in.^4$

$S = 456\ in.^3$

$A = 76.7\ in.^2$

SECTION 1

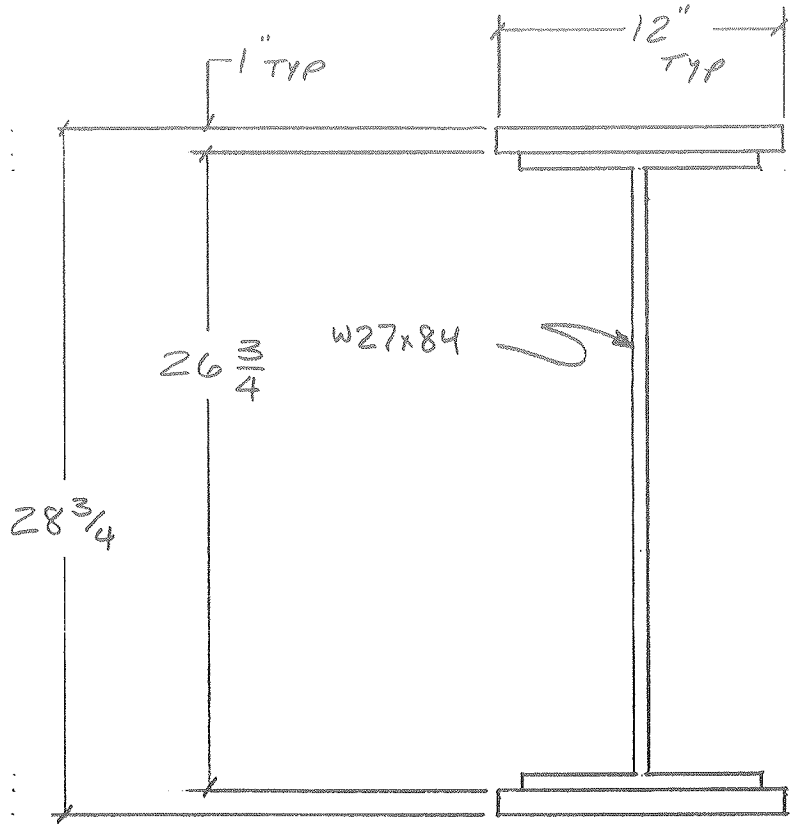

SECTION PROPERTIES

$I = 7470\ in.^4$

$S = 520\ in.^3$

$A = 48.8\ in.^2$

SECTION 2

BOTTOM BEAM

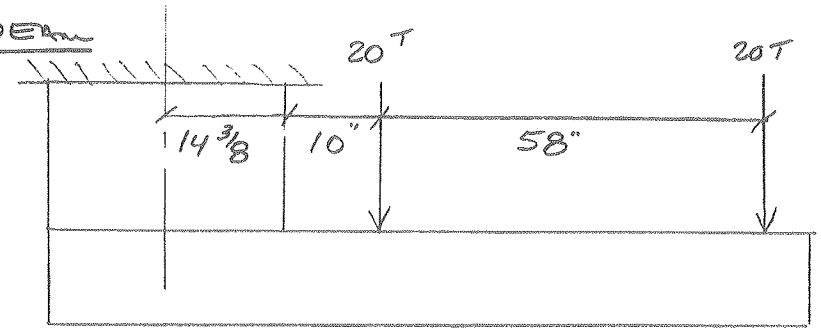

DESIGN TO DEFLECTION ORIENTED —

$M_{MAX} = (40000)(106.75) = 4.27 \times 10^6$ IN-LB.

$F_a = 10{,}000$ psi

AVAILABLE MATERIAL
W14x145
$I = 1710$ IN.^{4}
$S = 232$ IN.^{3}

$S = \frac{4.27 \times 10^6}{10000} = 427$ IN.^{3} > 232 IN.^{3} → ADD TOP & BOTTOM PLATES

TO PROVIDE NEEDED STRENGTH AT LOAD CONTACT POINTS USE 1" THK x 18" WIDE (MIN) PLATE, GUSSETED AT LOAD PTS.

TABLE PG 2-236 AISC-ED.9

NEW I → $I = 1710 + (1 \times 18)(124) = 3942$ IN.^{4} ; $c = \frac{14.75 + 2}{2} = 8.375$

$S = \frac{3942}{8.375} = \underline{\underline{471}}$ IN.^{3}

LOOKING AT DEFLECTION AT FREE END

$$\Delta_{TOTAL} = \frac{P_1 b_1^2}{6EI}(3l - b_1) + \frac{P_2 b_2^2}{6EI}(3l - b_2)$$

$b_1 = 10"$
$b_2 = 58"$
$l = 73"$

$$= \frac{40000}{6 \times 29 \times 10^6 \times 3942}\left[(10^2)(3 \times 73 - 10) + (58)^2(3 \times 73 - 58)\right]$$

$= \underline{\underline{.033}}$ ↓ OK.

CHECK STRESS:

$F_b = \frac{4.27 \times 10^6}{471} = 9{,}065$ psi OK! < 21.6 KSI (.6 x F_y)

SHEAR IN WEB:

$\frac{80000 \text{ LBS}}{14.75 \times .688} = 7{,}883$ psi < 14,400 ALLOWABLE (.4 F_y)

Top BEAM:

SAME SECTION AS BOTTOM, WITH REINFORCEMENT AT LIFTING EYE.

W14x145
w/ 1" PLATES TOP & BOTTOM
$I = 3942 \text{ in.}^4$
$S = 471 \text{ in.}^3$

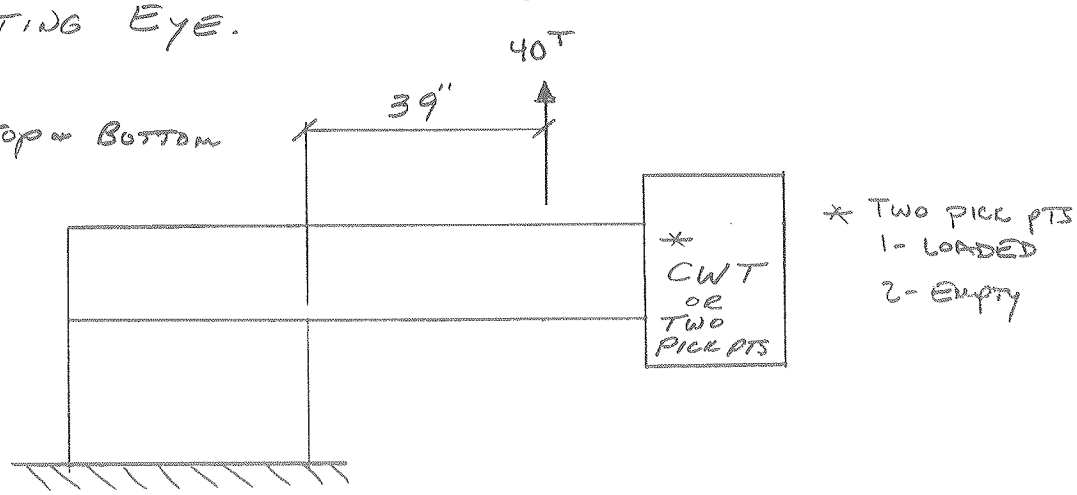

DEFLECTION AT LOAD: $\Delta = \frac{PL^3}{3EI} = \frac{80000 \times 39^3}{3 \times 29 \times 10^6 \times 3942} = 0.014'' \uparrow$

VERTICAL BEAM:

EQUIVALENT LOAD;

$$M = \frac{PL}{8} \therefore P = \frac{8M}{L} = \frac{(8)(4.27\times10^6)}{160 \quad 224}$$

$$= 2.135\times10^5 \text{ LBS} \quad 152500^*$$

$$\Delta = \frac{PL^3}{192EI} = 0.040'' \quad 0.041''$$

SHEAR THRU WEB:

WEB AREA = 26.75 x .438 = 11.68 in²

$$v = \frac{P}{2} = \frac{152500}{2} = 76,250$$

$$\sigma = \frac{76250}{11.68 \text{ in}^2} = \sim 6500 \text{ psi}$$

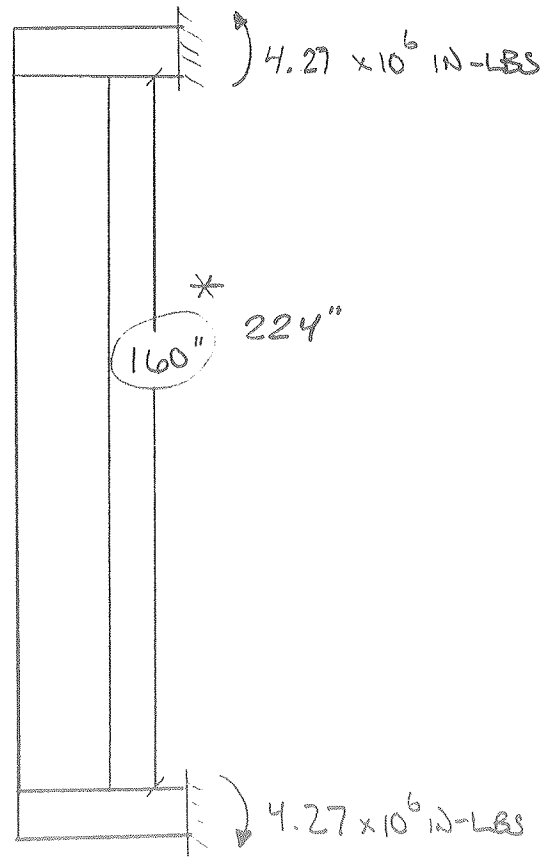

FERMILAB
ENGINEERING NOTE

SECTION	PROJECT	SERIAL-CATEGORY	PAGE
			51

SUBJECT: DEFLECTION OF LOADED FIXTURE) (NEGLECTING WGT OF FIXTURE)

NAME: H. J. STREDDE

DATE: 11-7-89 | * REVISION DATE: 7-15-98

DEFLECTION: (REF. DESIGN OF WELDMENTS, BLODGET Pg 2.11/6)

P = 40 TONS
$L_1 = 53.375''$
$L_2 = 176.75''$ * 240"
$A_1 = 78.7\ in^2$
$I_1 = 3942\ in^4$
$E_T = 29\times10^6\ in^2$
$E_S = 12\times10^6\ in^2$
$A_2 = 48.8\ in^2$
$I_2 = 7470\ in^4$

DEFLECTION DUE TO AXIAL ELONGATION:

$$\Delta_a = \frac{PL_2}{A_2E} = \frac{40\times2000\times\overset{240\,*}{176.75}}{48.8\times29\times10^6} = 0.010 \quad * \ 0.014''$$

DEFLECTION DUE TO BENDING:

ROTATION OF VERT. MEMBER,

$$\Delta_B = \frac{PL_1^2L_2}{2EI_2} = \frac{40\times2000\times(53.375)^2\times\overset{*240}{(176.75)}}{2\times29\times10^6\times7470} = 0.092'' \quad * \ .125''$$

ROTATION ACTING AS CANTILEVER,

$$\Delta_{C_T} = \frac{PL_1^3}{3EI_1} = \frac{40\times2000\times(53.375)^3}{3\times29\times10^6\times3942} = 0.035''$$

DEFLECTION DUE SHEAR:

$$\Delta_{d_{Top}} = \frac{PL_1\alpha_2}{A_2E_S} = \frac{40\times2000\times82\tfrac{3}{8}\times7.234}{48.2\times12\times10^6} = 0.082$$

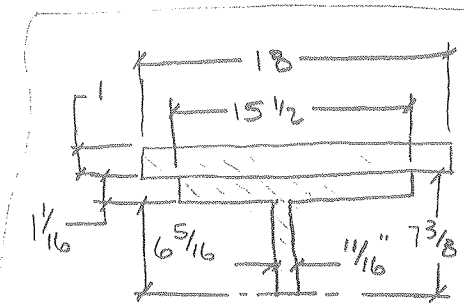

TOTAL DEFLECTION:

$$\Delta_T = \Delta_a + 2(\Delta_B + \Delta_C + \Delta_d)$$

$$= 0.010 + 2(.092 + .035 + .082)$$

$$= 0.428 \quad * \ .014 + 2(.125 + .035 + .082) = .498''$$

$$\alpha = \frac{aYA}{IT} = 7.234$$

a = area of SHADED SECTION
A = TOTAL SECTION AREA
Y = CENTROID OF SHADED SECTION
I = MOMENT OF TOTAL SECTION
T = WEB THICKNESS

FERMILAB
ENGINEERING NOTE

SECTION	PROJECT	SERIAL-CATEGORY	PAGE
			61

SUBJECT

NAME H. J. STREDDE

DATE 5/10/90

REVISION DATE

WELD SIZE, PLATE TO I-BEAM FLANGE (SECT. 1)

$$f = \frac{VAy}{In} = \frac{40 \times 2000 \times \overset{\text{PLATE}}{(18 \times 1)} \times \overset{\text{CENTROID}}{(7\tfrac{3}{8} + \tfrac{1}{2})}}{3942 \times 2} = 1438 \text{ LBS/IN.}$$

$$\text{FILLET SIZE} = \frac{1438}{\underbrace{14850}_{.3 \times .70711 \times 70000}} = 0.0968$$

MIN. SIZE DUE TO MATERIAL THICKNESS ≈ 1/4

USING 3/8 weld; $\frac{0.097}{0.375} = 26\%$ OF CONTINUOUS weld

SAY 4" weld ON 8" ctrs.

3/8 ▽ 4-8 ⟨ 7018

PLATE TO I-BEAM (SECT. 2)

$$f = \frac{40 \times 2000 \times \overset{\text{PLATE}}{(12 \times 1)} \times \overset{\text{CENTROID}}{(13\tfrac{3}{8} + \tfrac{1}{2})}}{7470 \times 2} = 892 \text{ LBS/IN.}$$

$$\text{FILLET SIZE} = \frac{892}{14850} = 0.060''$$

using 3/8 FILLET, $\frac{0.060}{0.375} = 16\%$

SAY 3" WELD ON 12" CTRS

3/8 ▽ 4-12 ⟨ 7018

FERMILAB
ENGINEERING NOTE

SECTION	PROJECT	SERIAL-CATEGORY	PAGE
			7/

SUBJECT: SAMUS TOROID LIFT FIXTURE

NAME: H. J. STREDDE

DATE: 3/21/90

REVISION DATE:

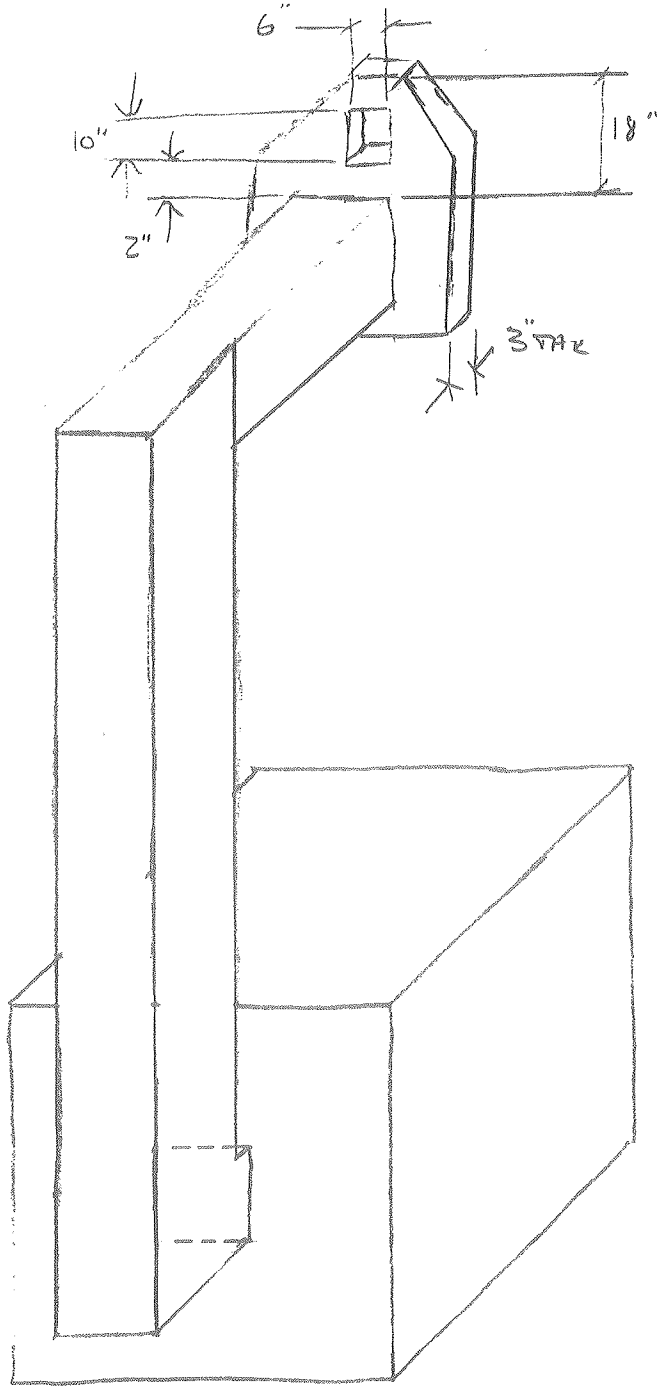

FERMILAB
ENGINEERING NOTE

SECTION	PROJECT	SERIAL-CATEGORY	PAGE
			7A/

SUBJECT: HOOK LINK - DETAIL

NAME: H. J. STREDDE

DATE: 5/14/90

REVISION DATE: 7-9-90

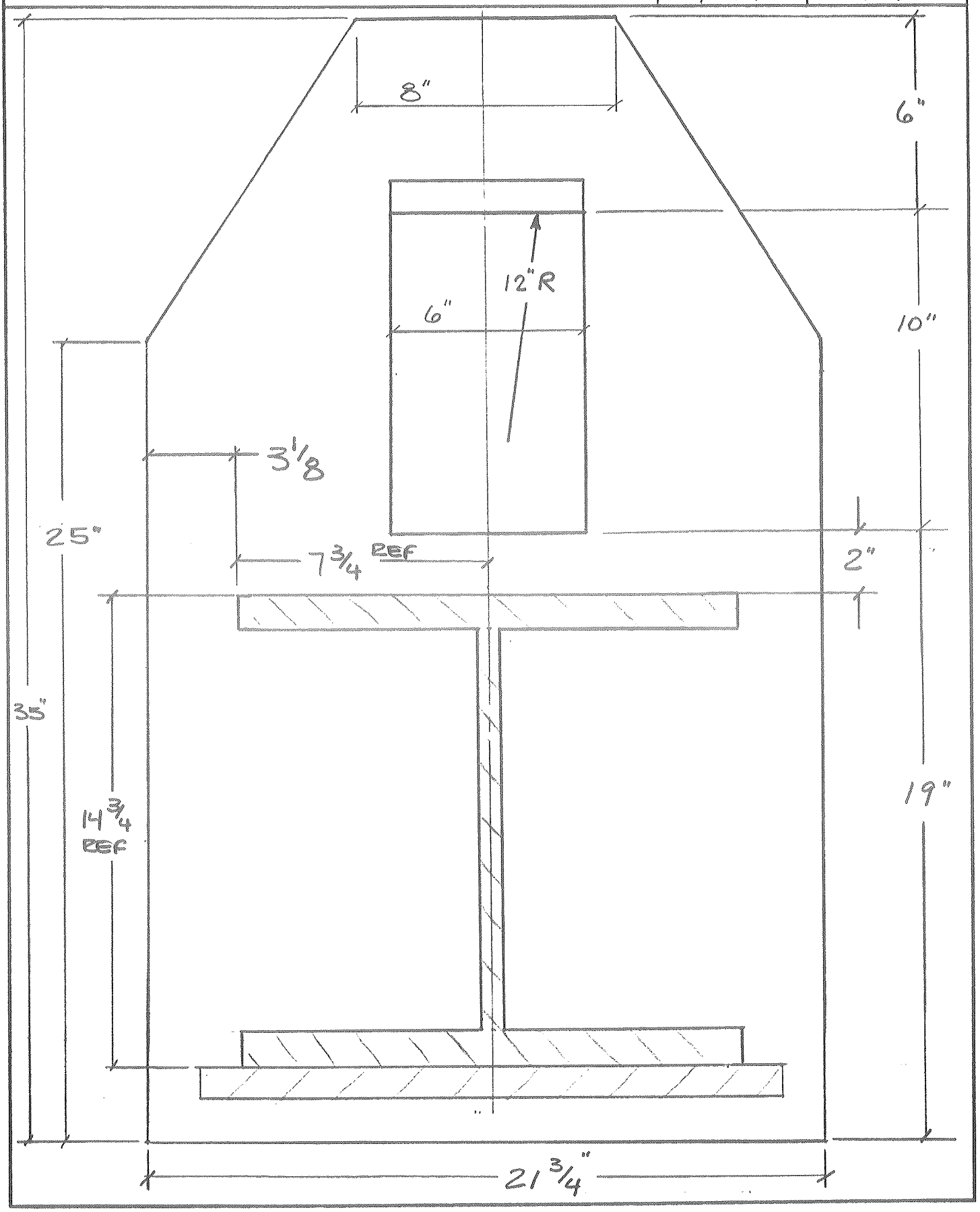

FERMILAB
ENGINEERING NOTE

SECTION	PROJECT	SERIAL-CATEGORY	PAGE
			7B/

SUBJECT: HOOK LINK - CROSS SECTION

NAME: H. J. STREDDE

DATE: 7/9/90

REVISION DATE:

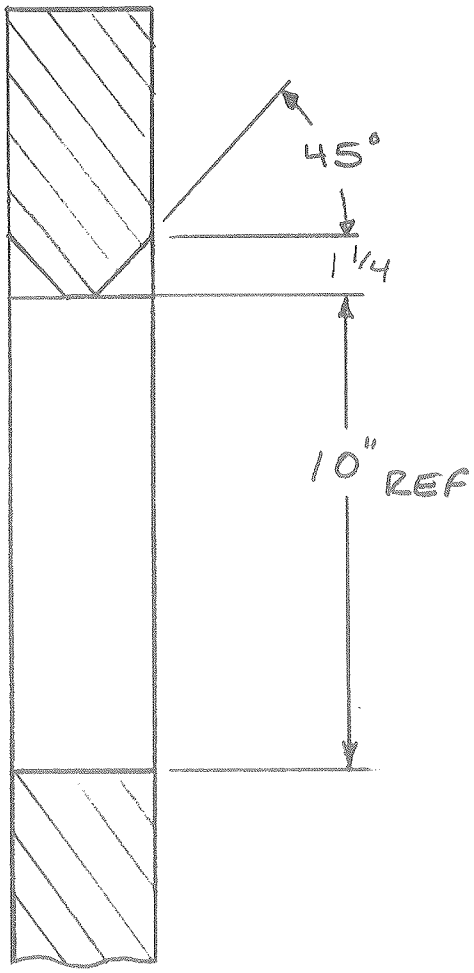

FERMILAB
ENGINEERING NOTE

SECTION	PROJECT	SERIAL-CATEGORY	PAGE
			76/

SUBJECT: HOOK LINK ANALYSIS

NAME: H. J. STREDDE

DATE: 7-9-90

REVISION DATE:

LINK: MAT'L 3" THICK
H.R.S.

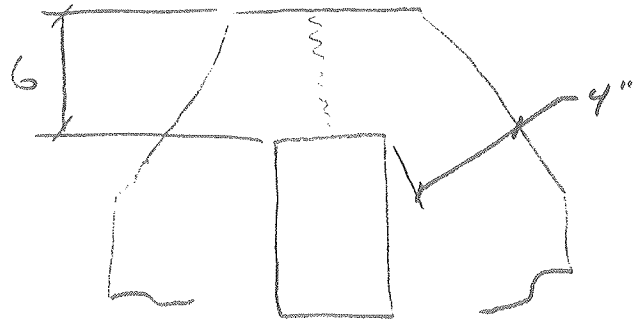

STRESSES:

TEAR OUT THRU TOP

$$S = \frac{40 \times 2000}{6 \times 3} = 4{,}444 \text{ psi}$$

THRU SIDE, $S = \frac{40 \times 2000}{4 \times 3} = 6{,}667$ psi

WELD SIZE:

LENGTH OF IS EQUAL TO PERIMETER OF W14x145
THAT DISTANCE IS ABOUT 85".

$$f = \frac{40 \times 2000}{85} = 941 \text{ LBS/IN.}$$

$$\text{LEG SIZE} = \frac{941}{14850 \text{ (ALLOW/1" FILLET)}} = 0.11''$$

MIN. REQ'D BASED ON PLATE THICKNESS ≈ 5/16

USE 3/8.

FERMILAB
ENGINEERING NOTE

SECTION	PROJECT	SERIAL-CATEGORY	PAGE
			81

SUBJECT: 'C' FRAME - CORNER CONNECTION (TYP)

NAME: H. T. STREDDE

DATE: 5-14-90

REVISION DATE:

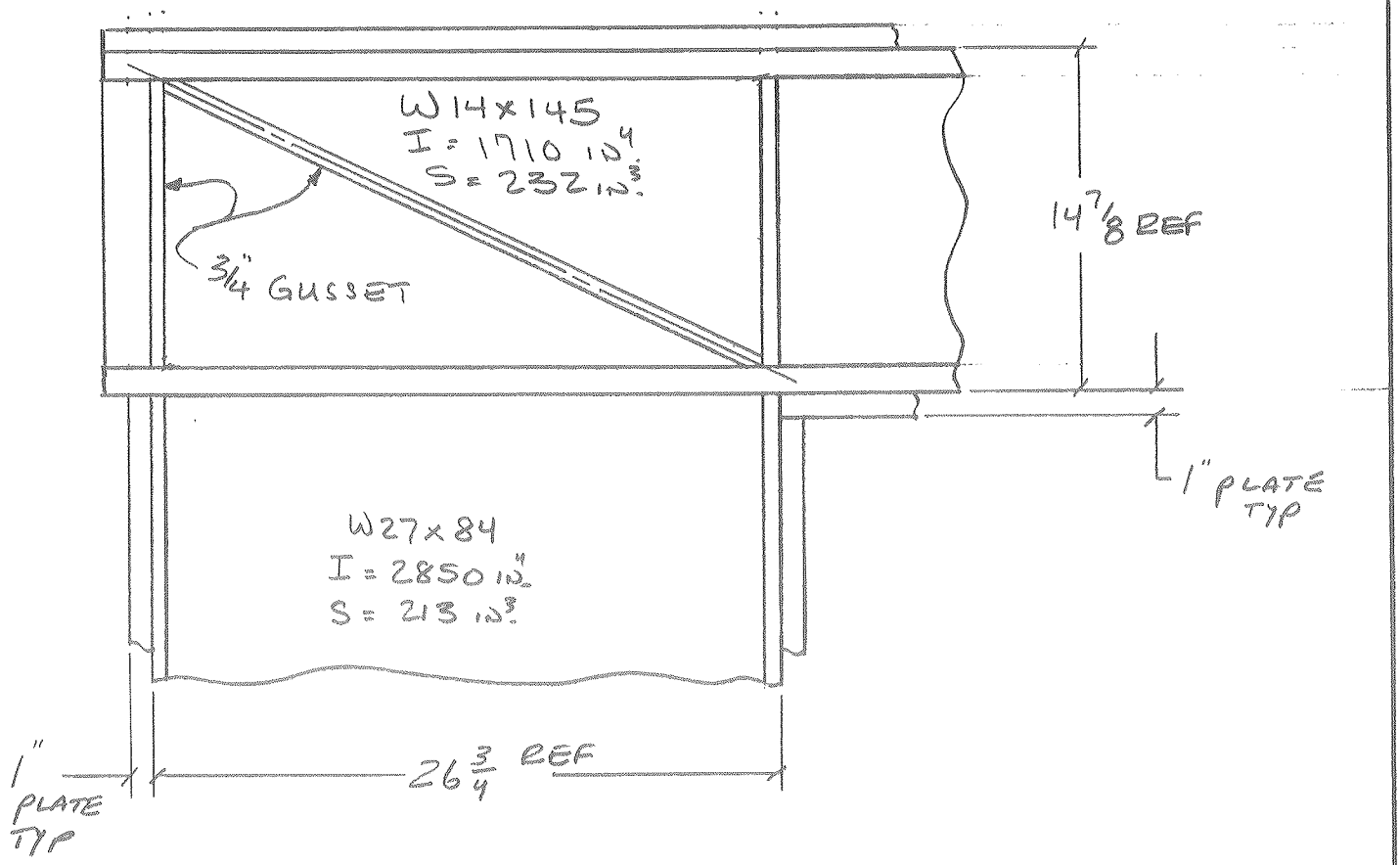

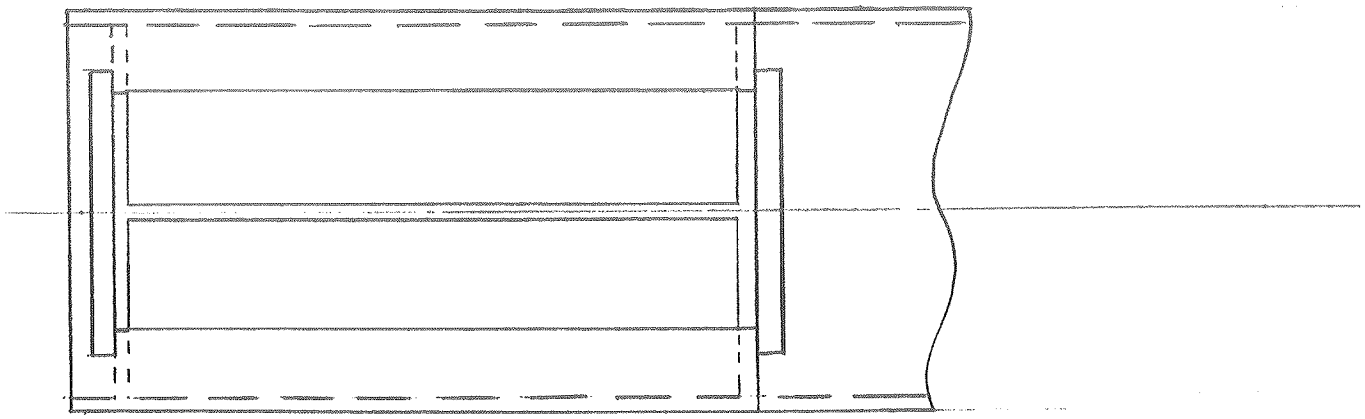

FERMILAB
ENGINEERING NOTE

SECTION	PROJECT	SERIAL-CATEGORY	PAGE
			9/

SUBJECT: SAMUS INSTALLATION FIXTURE BOTTOM BEAM

NAME: H. J. STREDDE

DATE: 4/26/90

REVISION DATE:

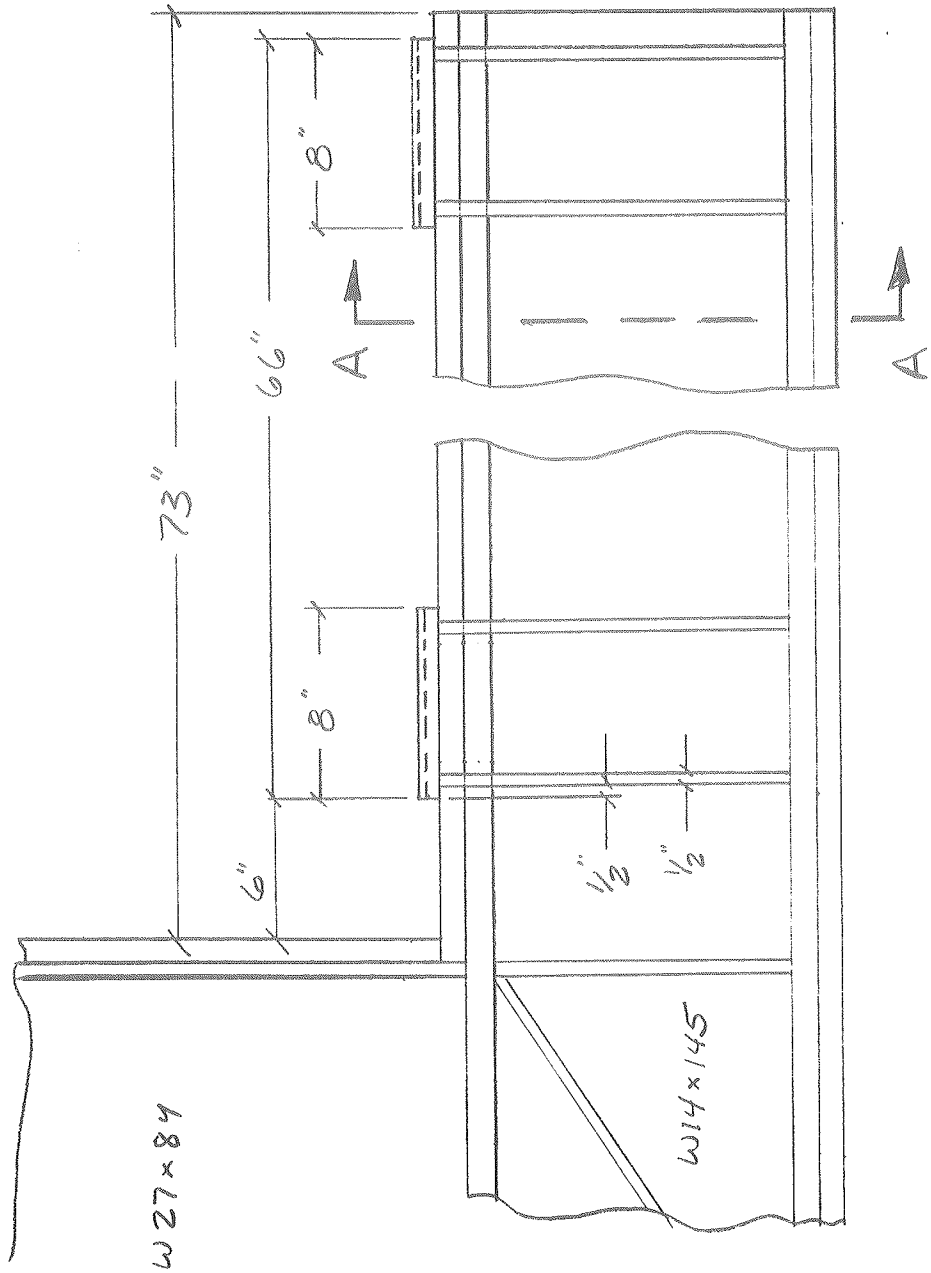

FERMILAB
ENGINEERING NOTE

SECTION	PROJECT	SERIAL-CATEGORY	PAGE
			10/

SUBJECT: CROSS-SECTION → SAMUS INSTALLATION BEAM

NAME: H. J. STREDDE

DATE: 4/26/90

REVISION DATE:

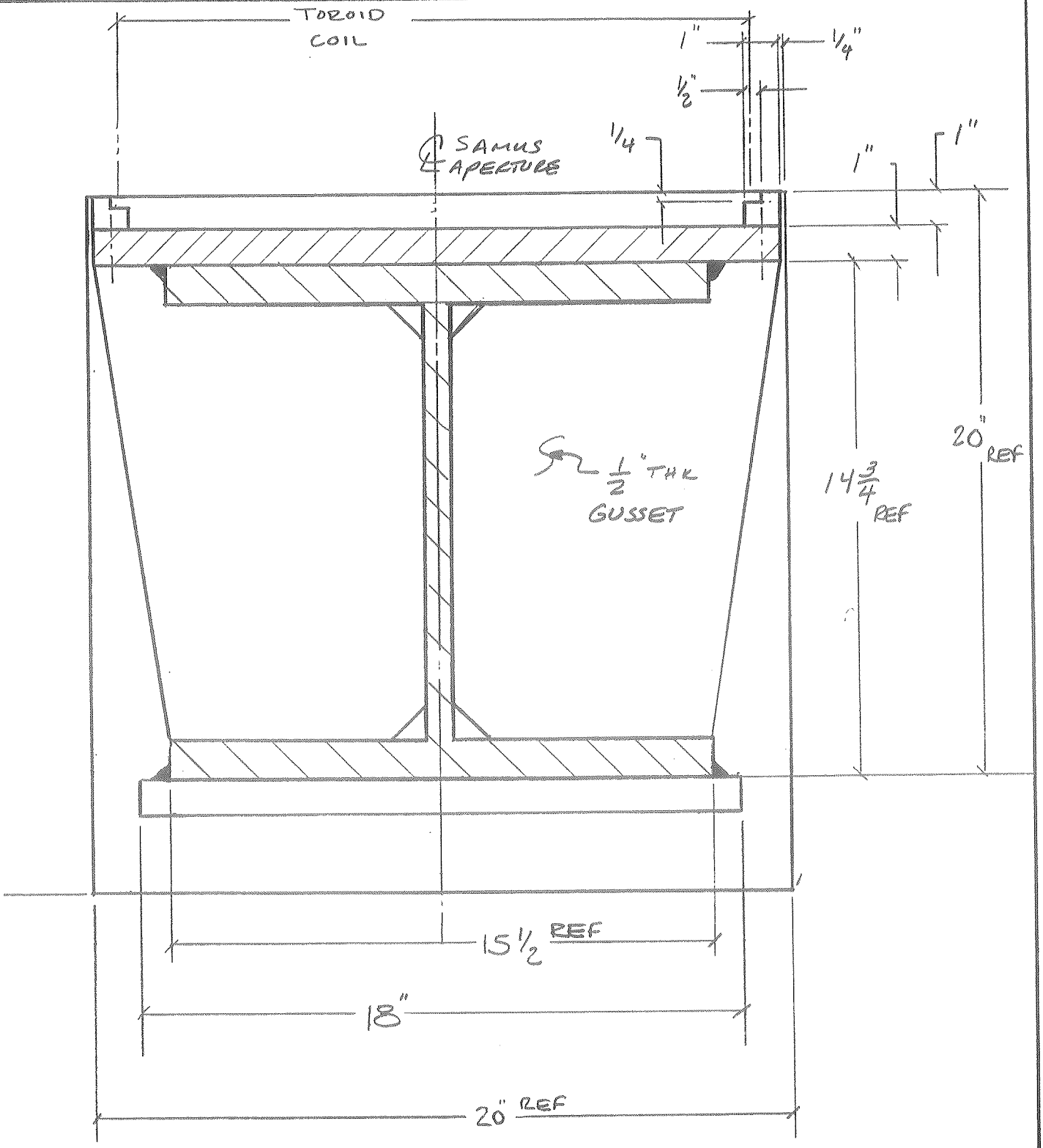

SECTION A-A

TYP

SUBJECT: CORNER ANALYSIS

NAME: H. J. STREDDE

DATE: 5/15/90 | REVISION DATE

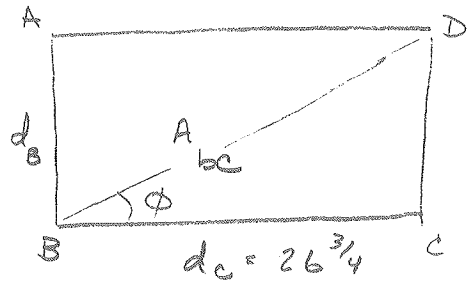

web THICKNESS:

$$t_w = \frac{2.63\,M}{F_y\,A}.$$

$F_y = 36$ KSI

$M = 4.27 \times 10^6$ IN-LBS $= 4.27 \times 10^3$ IN-KIPS.

THEN $t_w = \dfrac{2.63 \times 4.27 \times 10^3}{36 \times 14\frac{7}{8} \times 26\frac{3}{4}} = .784'' > \begin{matrix} 7/16 & W27\times84 \\ 11/16 & W14\times145 \end{matrix}$

To increase web use diagonal stiffeners:

REQ. STIFFENER AREA $= \dfrac{1}{\cos\phi}\left[\dfrac{1.76\,M}{d_b\,F_y} - 0.67\,t_w\,d_c\right].$

$\phi = 29.07°$

$\cos\phi = 0.87396$

$$= \frac{1}{0.87396}\left[\frac{(1.76)(4.27\times10^3)}{(14.875)(36)} - (0.67)(.438)(26.75)\right].$$

$= 7.075$ IN^2.

use $\frac{3}{4}''$ plate, THEN, $\dfrac{7.075}{.75\times2} \cong 5''$ plate WIDTH

STIFFENER IS $\frac{3}{4}'' \times 5'' \times (28.5$ REQ$)$ LG.

Flange Force $= F_y A_f = (36)(\overset{W27\times84}{9.960} \times .640) = 229$ KIPS

WELD CAPACITY $= (a)(.707)(21)(2) = 29.7a$

LENGTH AVAILABLE $= 14.875 - 2 = 12.875$

REQ'D $a = \dfrac{229}{(29.7)(12.875)} = 0.599''$ SAY $\frac{5}{8}''$ FILLET ALONG AB

Weld Size → BC :

40 TON LOAD ; $F_a = .6 \times 36 = 21.6$ ksi

TENSILE LOAD: 40 TONS = 80 Kipo.

SHEAR LOAD: $\mu N = .15 \times 40$ TONS = 6 TONS = 12 Kipo.

TREATING weld as a LINE (Ref: BLODGETT 6.3-3)

$$f = \frac{M}{S_W} ; \quad S_W = 2bd + \frac{d^2}{3}$$

$$= (2)(10)(26\tfrac{3}{4}) + \frac{(26\tfrac{3}{4})^2}{3}$$

$$= 773.5 \text{ in}^2$$

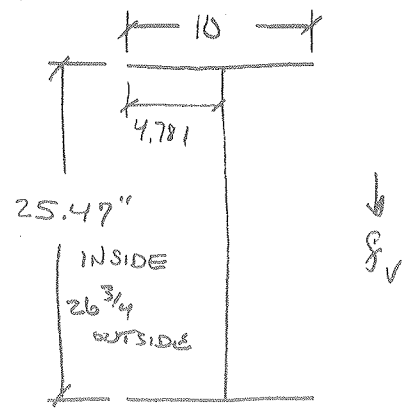

$$f_b = \frac{4.08 \times 10^6}{773.5} = 5275 \text{ LBS/IN.}$$

$$f_T = \frac{40 \times 2000}{(2)(10+10+25.5+25.5+9+9)} = 899 \text{ LBS/IN.}$$

$$f_V = \frac{12000}{(2)(25.5)} = 235 \text{ LBS/IN}$$

$$f_{weld} = \left[(899+235)^2 + (5275)^2 \right]^{1/2} = 5396 \text{ LBS/IN.}$$

allowable force on Weld (1" fillet) = (.3)(.7071)(70) = 14850 LBS

$$\text{weld size} = \frac{5396}{14850} = 0.363" \quad \text{SAY } 3/8 \text{ FILLET}$$