LIFTING FIXTURE FOR 4 DEWARS

SPREADER BAR

I.D. Nº 90 COLOR OF BAR : RED

LOAD CAPACITY PAINTED ON BAR 3200 ~~TONS~~. LBS

DATE CAP. & I.D. Nº PAINTED ON BAR _____

DATE OF LAST LOAD TEST. 3-29-90

TEST LOAD WEIGHT 4000 ~~TONS~~ LBS.

TEST LOAD % 125 %

STRESS CALCULATIONS :

DONE BY N. BOSEK

DATE 12-27-89

REMARKS :

I.D. # 90

ARGON DEWAR LIFTING FIXTURE | NB. | 1

12-27-89

DEWAR WEIGHT 750 lb/EA (4) ON FIXTURE

BASE PLATE THICKNESS

ROARK p.233
CASE 63

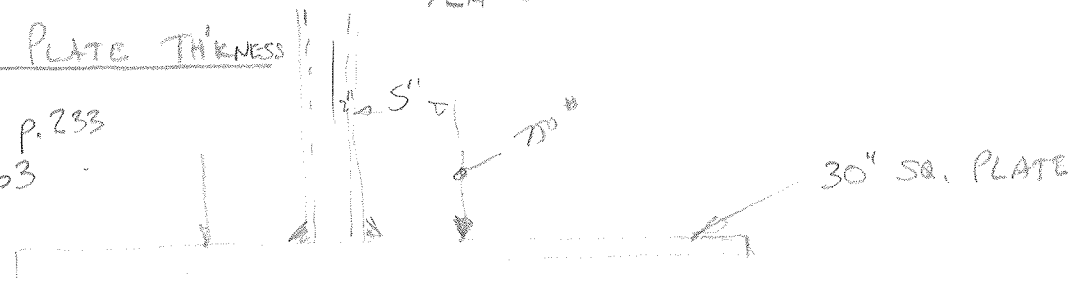

$a = 7''$ $b = 2''$ $\frac{a}{b} = 3.5$ $\therefore \beta = 7.3$

$$\sigma = \beta \frac{W}{t^2} = \frac{7.3 \times 750}{t^2} = 12{,}000 \text{ max}$$

$$t^2 = .456$$

$$t = .675'' \text{ THK}$$

CHECK $\sigma = \frac{7.3 \times 750}{.75^2} = 9733 \text{ psi}$

OR $\sigma = \frac{7.3 \times 750}{.625^2} = 7151 \text{ psi}$

WELD SIZE:

750 lb x 4 = 3000 lb

USE 4 x 4 x 1/4" THK STRUCTURE TUBE

WELD LGTH = 4 x 4 = 16"

$$\frac{3000 \text{ lb}}{16 \text{ IN}} = 187.5 \text{ lb/IN. MIN}$$

USE 3/16 FILLET ≈ 1200 lb/IN > 187.5

4" TUBE TENSION

$$\sigma = \frac{P}{A} = \frac{3000 \text{ lb.}}{3.54 \text{ in}^2} = 848 \text{ psi.}$$

4" TUBE BENDING DUE TO OFFSET LOAD

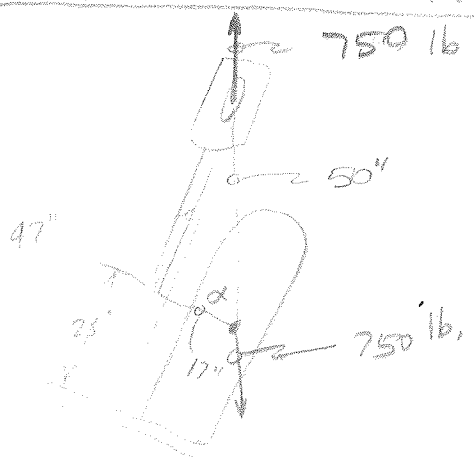

$$\cos\alpha = \frac{17}{50} = .34$$

$$\alpha = 70° - 7.5'$$

$F = 750$ or $70°$

$F = 255$ lb.

MAX MOMENT $= 72" \times 255 \text{ lb} = 18\,360$ IN. lb.

$$F_b = \frac{M}{S} = \frac{18360}{4} = 4590 \text{ psi.} < \text{ok, } 12{,}000 \text{ psi}$$

$$F_{ALLOW} = \frac{12 \times 10^6}{L \times \frac{d}{A_f}} = \frac{12 \times 10^6}{72 \times 4/1} = 41\cancel{667} \text{ psi} \quad \text{use } 12{,}000 \text{ psi}$$

WEIGHT

222.9
68.1
24.3
163.9
57.4
88.5
625.1 lb.

FERMILAB

ENGINEERING NOTE

SECTION	PROJECT	SERIAL-CATEGORY	PAGE

SUBJECT	NAME	
	DATE	REVISION DATE

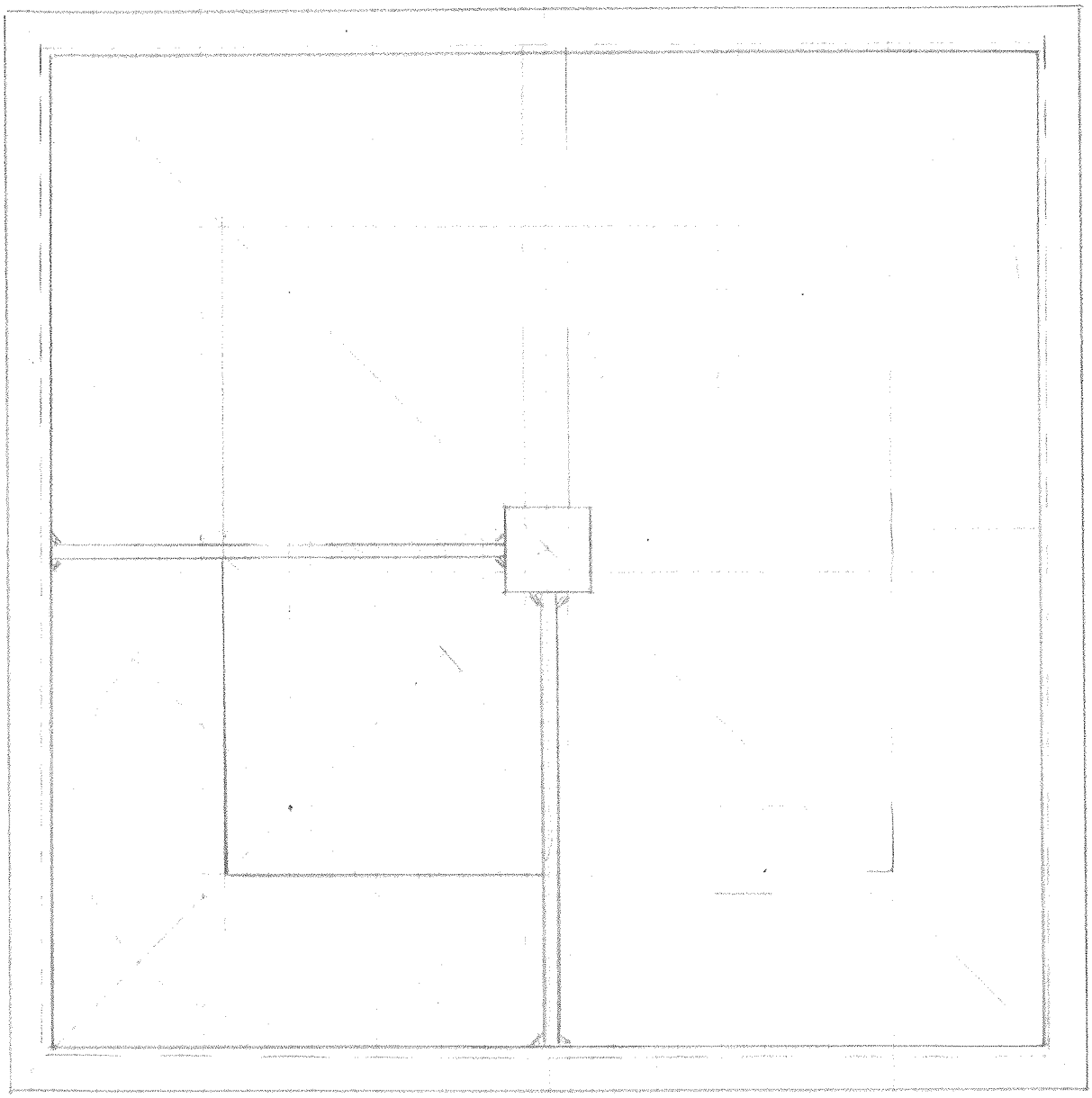

522703

FERMILAB ENGINEERING NOTE	SECTION	PROJECT	SERIAL-CATEGORY	PAGE
	RD/mech	Argon Lifting Fixture		1/2

SUBJECT	NAME	
ID # and Load Capacity Check	Don Mitchell	
	DATE	REVISION DATE
	12-17-90	

4 argon tanks @ 750# = 3000# × 1.25 = 3,750#

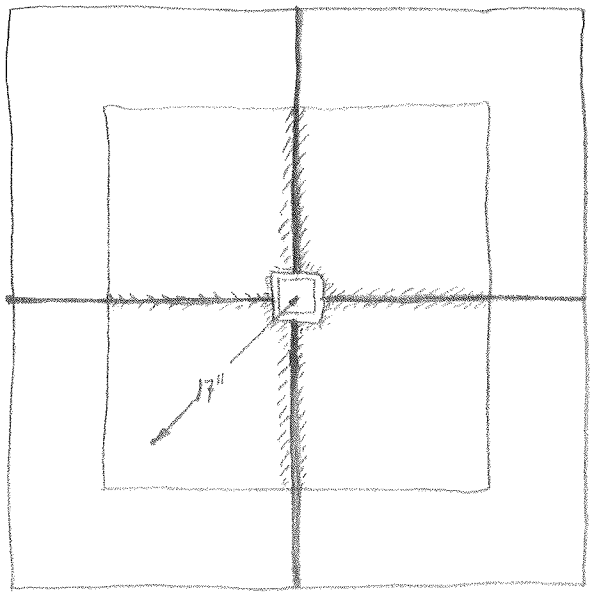

Rourke & Young

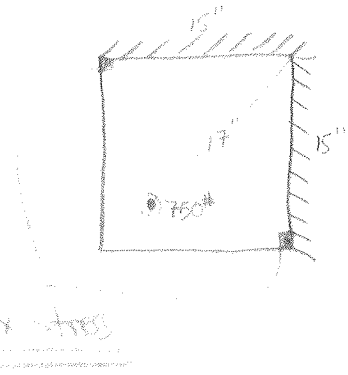

$a = 15 \quad b = 15 \quad t = .875$ or $.75$

$\frac{a}{b} = 1 \quad \therefore \quad \beta_1 = 1.769 \qquad q = 3.33$ psi

$\beta_2 = 1.769$

$\gamma_1 = 1.183$

$\gamma_2 = 1.183$

$$\sigma_{max} = \frac{-\beta_1 q b^2}{t^2} = \frac{(-1.769)(3.33\,psi)(15\,in)^2}{(.875\,in)^2}$$

$$= -1,732.89 \text{ psi}$$

DE/CASE

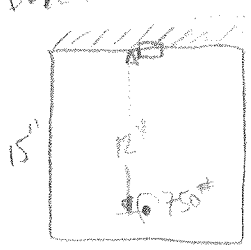

$\sigma_{max} = 5,784$ psi

FERMILAB ENGINEERING NOTE	SECTION	PROJECT	SERIAL-CATEGORY	PAGE
	RD/Mech	Argon Lifting Fixture		2/2

SUBJECT	NAME	
ID # and Load Capacity Check	Don Mitchell	
	DATE 12-17-90	REVISION DATE

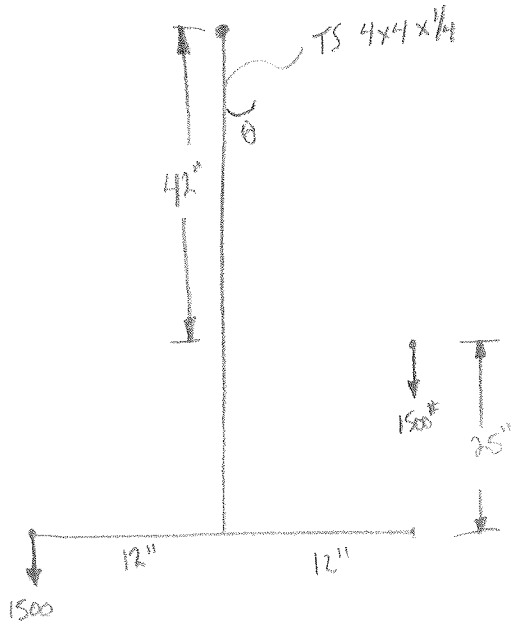

$$\sigma_{tension} = \frac{F}{A} = \frac{3000\#}{3.54 in^2} = 847 \text{ psi}$$

OK

$$\theta = 15.95°$$

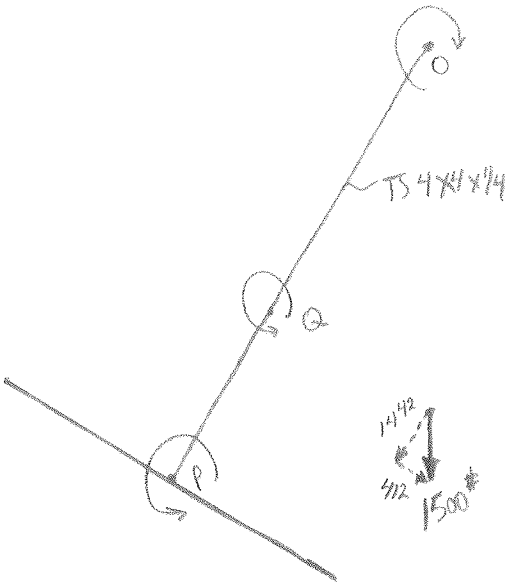

$$\Sigma M_o = 42(4.12) - 12(14.42) = \emptyset \text{ in-lb}$$

$$\Sigma M_P = -25(4.12) - 12(14.42) = 27{,}604 \text{ in-lb}$$

$$\Sigma M_Q = -12(14.42) = 17{,}304 \text{ in-lb}$$

$$M = 17{,}304 \text{ in-lb} \qquad S = 4.11 \text{ in}^3$$

$$\sigma = \frac{M}{S} = \frac{17{,}304}{4.11} = 4{,}210.2 \text{ psi}$$

OK