LIFTING DEVICE

DEVICE NAME: KTeV SA LIFTING FIXTURE

ENGINEERING NOTE NUMBER: 82

DRAWING NUMBER: 3832.274-MD-268594 REV A.

APPLICABLE STANDARD: ASME B30.20 ASC 9th ED.

RATED LOAD: 16 TONS 32,000 POUNDS.

TEST LOAD: 41,200 POUNDS

TEST LOAD PERCENT: 128.75%

LAST LOAD TEST DATE: 10 NOVEMBER 1995

COLOR: YELLOW

STRESS CALCULATIONS:

Done by: DAVE PUSHKA

Date: OCTOBER 1995

Reviewed by: [illegible] 16 NOVEMBER 1995

Date:

REMARKS:

IDENTIFICATION:

Engineering Note Number & Rated Load Must be Clearly Marked On a Conspicuous Surface.

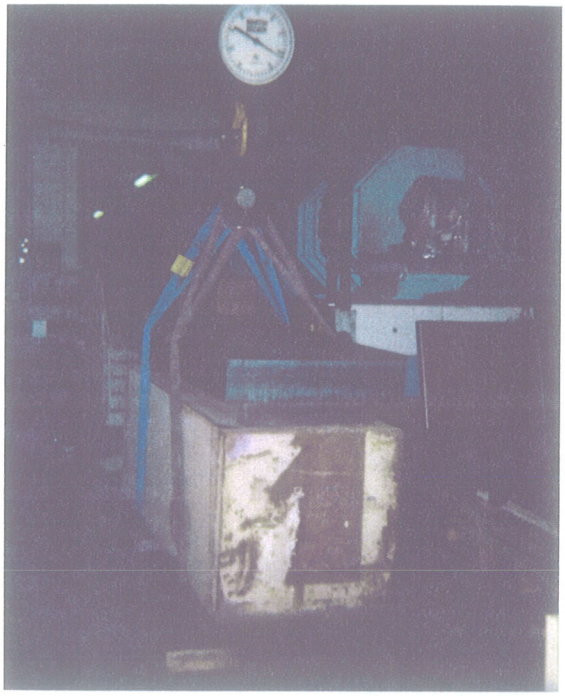

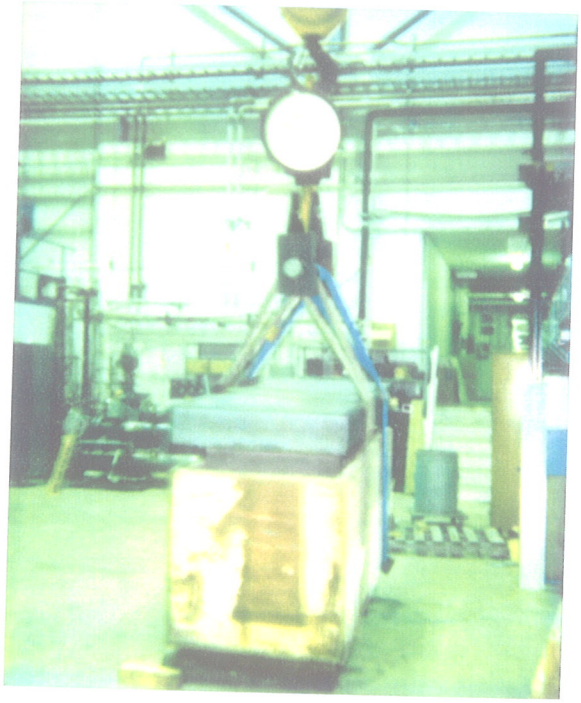

MECHANICAL SUPPORT DEPARTMENT
ENGINEERING NOTE

NUMBER: MSD EN-2.7.4 - KTeV
(WBS number items 2.7.4)

DATE: 17 August 1995 Revised 18 October 1995

TITLE: Design Note for the 16 ton capacity lifting Fixture used for the KTeV spectrometer anti, (SA) installation and assembly.

AUTHOR(s): Dave Pushka

REVIEWER: Ang Lee August 1995

KEY WORDS: Lifting Fixture, SA's, Spectrometer Anti's

ABSTRACT/SUMMARY:

This design note contains the calculations required to size member used for the lifting fixture. Allowable stresses are based on those calculated from AISC 9th edition and from ASME B30.20 'Under-the-Hook Lifting Fixtures'. The most conservative of the two values calculated from each Code was used.

This fixture was designed to allow a single point pick of one fully assembled spectrometer anti detector including the A-Frame suspended from it.

Note that this fixture must be centered over the C.G. (center of gravity) of the load as it is not designed for moments which would result from non-centered loads.

Table of Contents:

	Description	PAGE
1.	Design Weight	1
	General Description of Problem	2
	Hook Size Information for Lab A and KTeV Hall	3
	Estimat of Loaction of C.G. of A-Frame, Frame, Module Assembly	4 and 5
	Pin Sizing Calculations	6 and 7
	Side Plate Sizing Calculations and Lug Palte Calculations by Inspection	8
	Sketch of Fixture Cross Section and Weld Sizing	9
	Results from Z. Tang's Analysis of the Frame when lifted at a single point	10 to 13
	Fixture Testing Set Up	14
2.	Zhijing Tang's 'Lifting of the Spectrometer Anti'	1 to 8
3.	SA Frame Reinforcement for Lifting the SA based on Z. Tang's Analysis	1

Design Weight:

From the University of Colorado 29 January 1994 document on the SA3 weight and Stand Strength, the SA3 modules weight 18,884 pounds, the frame is 3,106 pounds for a total of 21,990 pounds (10.99 tons).

From the University of Colorado 1 June 1994 document on the SA2 weight and Stand Strength, the SA2 modules weight 17,172 pounds, the frame is 3,150 pounds for a total of 20,322 pounds (10.16 tons).

From the University of Colorado 1 June 1994 document on the SA4 weight and Stand Strength, the SA4 modules weight 12,404 pounds, the frame is 3,106 pounds for a total of 15,510 pounds (7.75 tons).

From the University of Colorado 1 June 1994 document on the CIA weight and Stand Strength, the CIA modules weight 8,984 pounds, the frame is 3,106 pounds for a total of 12,090 pounds (6.05 tons).

From D. Pushka's A-Frame design note, each A-Frame weighs 4300 pounds.

So the total weight of the heaviest detector (SA3) and an A-Frame is 11 tons + 2.2 tons = 13.2 tons. Add 15% for extra equipment (module installation hoist, etc.) and round to 16 tons even.

Lifting:

Initially, Zhijing Tang looked at the stress and deflections due to applying a load to the center hole in the SA Frame (refer to the pages 10 to 13 in the fist section of this engineering note). Based on this analysis results, the lifting fixture was designed. While the fixture was still being fabricated, the first of the SA's, SA3, was fully assembled on the A-frame in Lab A. Zhijing and I viewed the completed assembly, including the actual intermittent welds on the box section at the top of the aluminum frame. After this inspection, Zhijing re-evaluated his model and prepared the report titled 'Lifting of the Spectrometer Anti'. Based on the high local bearing stresses in the aluminum of the frame box section at the lifting pin calculated in this new report, I sized the reinforcement plate for lifting as shown in the third section of this engineering note. Zhijing and I looked at this reinforcement and are comfortable that this reinforcement will keep the local bearing stresses below the allowable values and conclude that no further analysis is required.

MECHANICAL SUPPORT DEPARTMENT
ENGINEERING NOTE

NUMBER: MSD EN-2.7.4 - KTeV
(WBS number items 2.7.4)

DATE: 9-1-95

TITLE: Dave ...e used for the ...sembly.

This E-NOTE looks

AUTHOR(s ok to me you

REVIEWEI

might want to bring

KEY WORI

the original Then 2

ABSTRACT

This desi ...sed for the
lifting fix ... AISC 9th
edition a ... The most
conserva

could sign it

This fixtu ...sembled
spectrom

Note that ...y) of the load
as it is no ...ed loads.

Table of Con

	Descri	PAGE
1.	Desig	1
2.	Gener	2
3.	Hook	3
4.	Estimat of Loaction of C.G. of A-Frame, Frame, Module Assembly	4 and 5
5.	Pin Sizing Calculations	6 and 7
6.	Side Plate Sizing Calculations and Lug Palte Calculations by Inspection	8
7.	Sketch of Fixture Cross Section and Weld Sizing	9
8.	Results from Z. Tang's Analysis of the Frame when lifted at a single point	10 to 13
9.	Fixture Testing Set Up	14

Design Weight:

From the University of Colorado 29 January 1994 document on the SA3 weight and Stand Strength, the SA3 modules weight 18,884 pounds, the frame is 3,106 pounds for a total of 21,990 pounds (10.99 tons).

From the University of Colorado 1 June 1994 document on the SA2 weight and Stand Strength, the SA2 modules weight 17,172 pounds, the frame is 3,150 pounds for a total of 20,322 pounds (10.16 tons).

From the University of Colorado 1 June 1994 document on the SA4 weight and Stand Strength, the SA4 modules weight 12,404 pounds, the frame is 3,106 pounds for a total of 15,510 pounds (7.75 tons).

From the University of Colorado 1 June 1994 document on the CIA weight and Stand Strength, the CIA modules weight 8,984 pounds, the frame is 3,106 pounds for a total of 12,090 pounds (6.05 tons).

From D. Pushka's A-Frame design note, each A-Frame weighs 4300 pounds.

So the total weight of the heaviest detector (SA3) and an A-Frame is 11 tons + 2.2 tons = 13.2 tons. Add 15% for extra equipment (module installation hoist, etc.) and round to 16 tons even.

FERMILAB ENGINEERING NOTE	SECTION	PROJECT	SERIAL-CATEGORY	PAGE
	RD/MSD/MSG	KTeV	274	2

SUBJECT	NAME	
SA LIFTING FIXTURE.	DANE PUSHKA	
	DATE: 11 MAY '95	REVISION DATE

DESIGN A LIFTING FIXTURE W/ 16 TON CAPACITY TO LIFT A FULLY ASSEMBLED SA DETECTOR W/ STAND. FROM THE COLORADO DOCUMENT 'THE SA3 WEIGHT AND STAND STRENGTH' THE SA3 DETECTOR IS CALCULATED TO WEIGH 13.2 TONS AND IS THE HEAVIEST DETECTOR. ∴ 16 TON LIFTING FIXTURE CAPACITY SHOULD BE MORE THAN ADEQUATE.

CONNECT FIXTURE TO AL. R @ TOP OF DETECTOR:

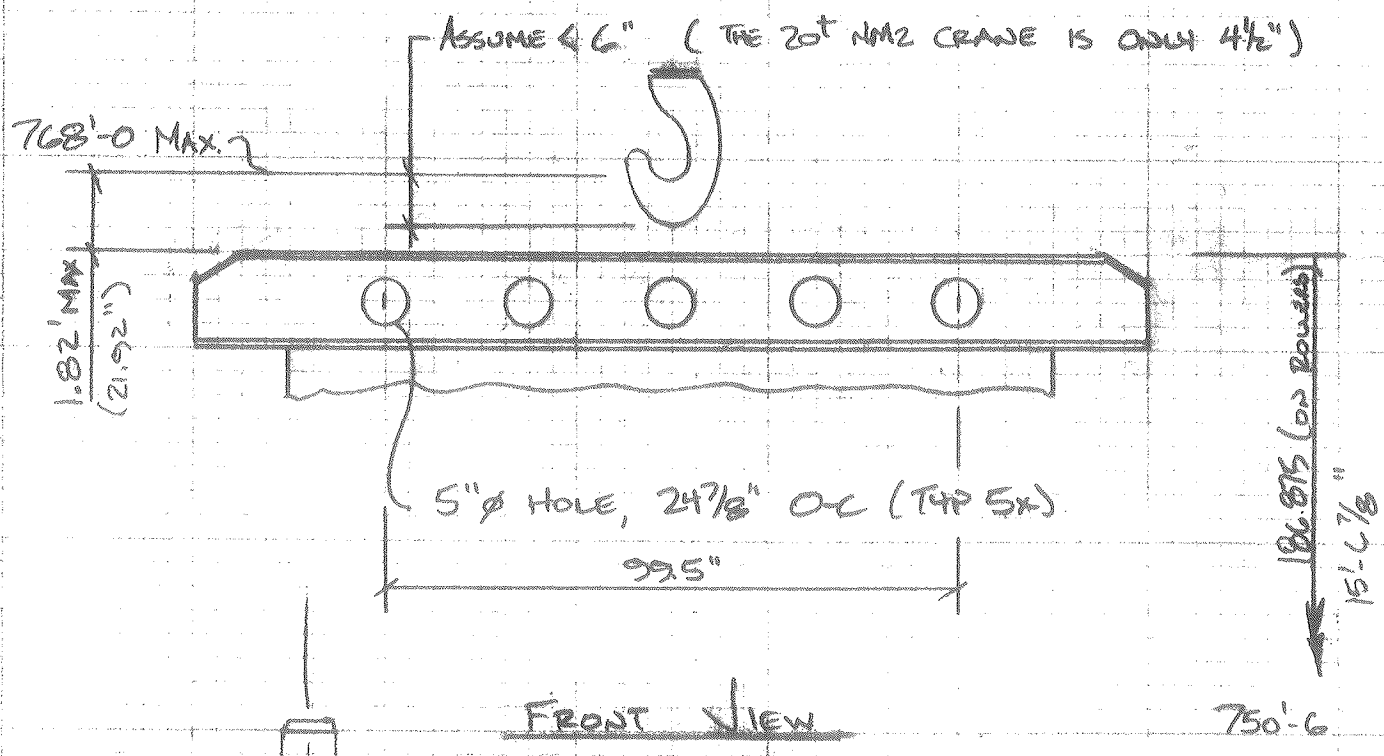

FRONT VIEW

750'-6

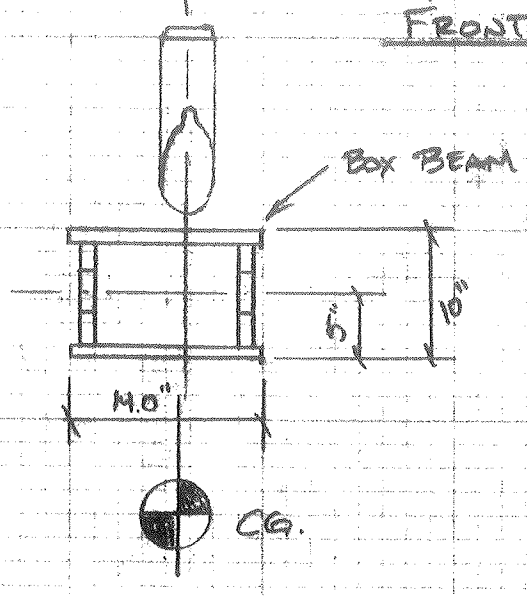

THE C.G. SHOULD FALL UNDER THE TOP OF THE BOX BEAM. BUT WILL VARY W.R.T. THE ℄ FOR EACH SA DETECTOR/DETECTOR-STAND COMBO.

578846

FERMILAB
ENGINEERING NOTE

SECTION	PROJECT	SERIAL-CATEGORY	PAGE
RD/MSD/MSC	KTEV	2.7.4	3

SUBJECT: Hook Size Information.

NAME: Dave Pushka

DATE: 8/18/95

REVISION DATE:

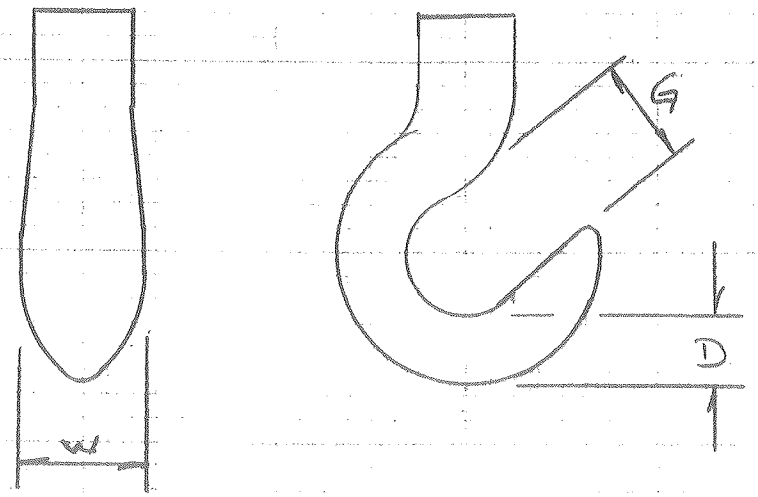

CRANE LOCATION	CAPACITY (TONS)	DIM W (IN)	DIM G, (IN)	DIM D (IN)
LAB A	20	3 3/8	4 3/4	4
NM4	25	3 1/2	4 3/4	4

578846

FERMILAB ENGINEERING NOTE	SECTION	PROJECT	SERIAL-CATEGORY	PAGE
	RD/MSD/MSG	KTEV	2.7.4	4

SUBJECT: CG's.

NAME: DAVE POSHKA

DATE: 8/18/95

REVISION DATE:

C.G. OF A-FRAME:

BOTTOM W12x40 -	(2)	480#	@ 9 1/8"	BEHIND D.S. FLG OF COL.	-8760
TOP W8x31	(2)	263#	@ 19.75"	U.S OF " " "	+10388
COL W8x31	(2)	394#	@ 4"	U.S. OF " " "	+3152
F. BRACE	(2)	175#	@ 41"	" " " " "	+14350
B. BRACE	(2)	175#	@ 46"	D.S. " " " "	-16,100
TOP W8x15 U.S	(1)	231#	@ 5 1/2"	D.S " " " "	-1270
" " D.S	(1)	231#	@ 25"	D.S " " " "	-5775
BOTTOM W6x15 U.S	(1)	231	@ 63.6"	U.S. " " " "	+14691
" W6x15 D.S	(1)	231	@ 68"	D.S " " " "	-15,708
X BRACE	(1)	64#	@ 7 1/2"	D.S " " " "	-480
		3908#			-5,511

$\Sigma M = -5511$ IN-LBS

TOTAL WT = 3908# ∴

$CG = \frac{5511 \text{ IN-LBS}}{3908 \text{ LBS}}$ 1.4 INCHES BEHIND D.S. COL. FLG.

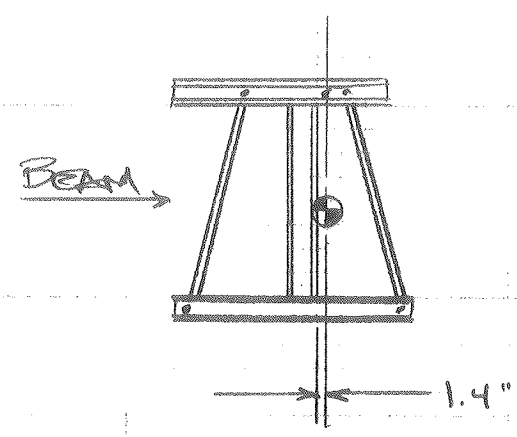

FERMILAB
ENGINEERING NOTE

SECTION	PROJECT	SERIAL-CATEGORY	PAGE
RD/MSD/MSG	KTEV	2.7.4	5

SUBJECT: C.G's

NAME: DAVE PUSHKA

DATE: 8/18/95

REVISION DATE:

C.G. OF MODULES IS APPROXIMATELY 7.84" U.S. OF COLUMN D.S. FLG.

SA3 MODULES WEIGH 18,884#

$\Sigma M_{MOD} = +148{,}050$ IN-LBS.

ASSUME AL. FRAME C.G. IS AT THE COL. ℄

FRAME WT = 3100 #

$M_{FRAME} = (3100\#)(4") = +12{,}400$ IN-LBS

$\Sigma M = -5541 + 12{,}400 + 148{,}050 = 154{,}909$ IN-LBS

TOTAL WT = 3908 + 3100 + 18,884 = 25,893 #

$\therefore d = \frac{154{,}909}{25{,}893} = 5.98$ IN.

∴ C.G. IS ABOUT 6" UPSTREAM OF COL. FLG.

578846

FERMILAB ENGINEERING NOTE	SECTION	PROJECT	SERIAL-CATEGORY	PAGE
	RD/MSD/MSG	KTEV	2.7.4	6

SUBJECT	NAME	DATE	REVISION DATE
SA LIFTING FIXTURE - PIN SIZING.	DAVE PUSHKA	11 MAY '95	18 AUG '95

CONCEPTUAL DESIGN:

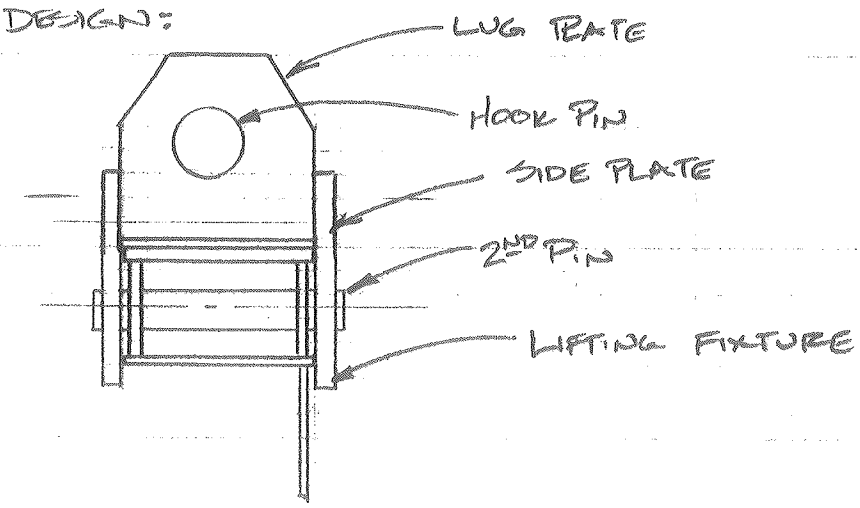

HOOK PIN -

ASSUME 1" THK SIDE R. HOOK PIN SPAN ≈ 5"

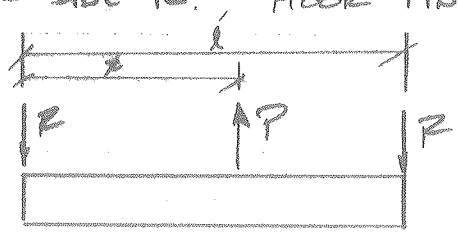

$P = 20$ TON.

$x = l/2$

$M_{MAX} = \frac{Pl}{4}$ $P = 32{,}000$ #, $l = 5$"

$M_{MAX} = 40{,}000$ IN-LBS

$\sigma = \frac{My}{I} = \frac{M}{S}$ $\sigma_{ALL} = 10$ KSI $\therefore S_{REQ'D} = 4.0$ IN^3

$S = \frac{\pi d^3}{32} = 4.0 \therefore d^3 = \frac{(4.0)(32)}{\pi} = 40.7$

$\therefore d = 3.4$ IN → USE 3 1/2" ⌀

FOR THE SECOND PIN,

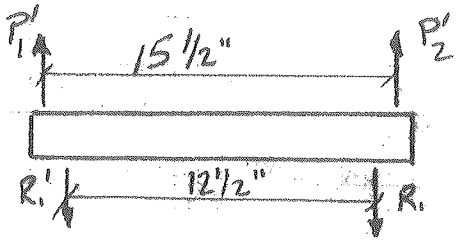

$M_{MAX} = P'a =$

SINCE LOAD MAY NOT BE CENTER, $P_1' \neq P_2'$ ∴ USE $P' = 32{,}000$ # AS A CONSERVATIVE DESIGN.

578846

SUBJECT: Pin Sizing Continued.

NAME: Dave Pushka

DATE: 17 Aug '95 | REVISION DATE:

$M_{MAX} = P'a = (32000 * 1.5 in) = 48{,}000$ in-lbs.

$\sigma_{ALLOW} = 10$ ksi $\therefore$ $S_{REQ'D} = \frac{M}{\sigma_{AL}} = \frac{48{,}000 \text{ in-lbs}}{10{,}000 \text{ lbs/in}^2} = 4.8 \text{ in}^3$

$d^3 = \frac{(S)(32)}{\pi} \rightarrow d = \left(\frac{(S)(32)}{\pi}\right)^{1/3} = \left(\frac{(4.8)(32)}{\pi}\right)^{1/3} = 3.65$ in

$\therefore$ Use a $4\frac{7}{8}$" ϕ Pin (Biggest that will easily fit in existing 5" hole in frame).

4 1/2 biggest avail

578846

FERMILAB ENGINEERING NOTE	SECTION	PROJECT	SERIAL-CATEGORY	PAGE
	RD/MSD/MSG	KTeV	2.7.4	8

SUBJECT	NAME		
SC LIFTING FIXTURE – SHEAR & TENSILE AREAS OF THE SIDE PLATES	DANE PUSHKA		
	DATE	REVISION DATE	
	22 JUNE '95	18 AUG '95	

FOR $\sigma_{MAX} = 10$ KSI & $\tau_{MAX} = 10$ KSI

AND ASSUMING 1" THK PLATE

$P_1 = 32{,}000$ #,

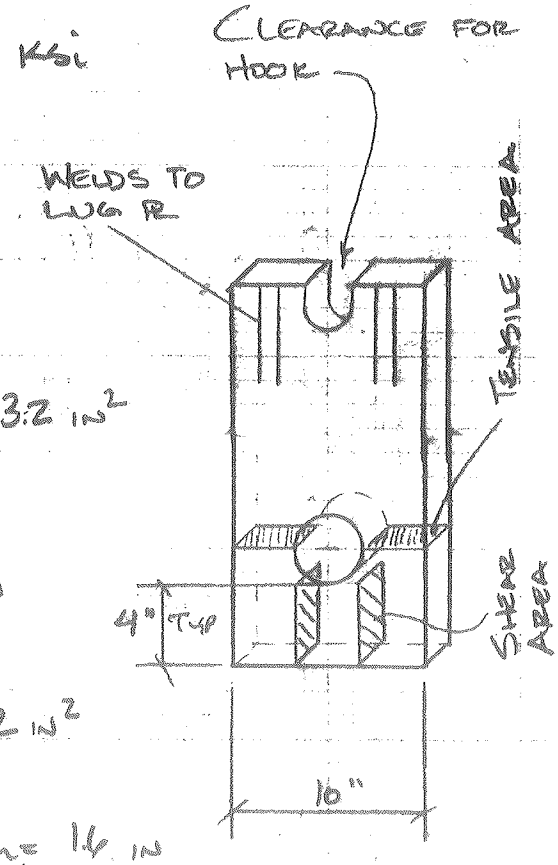

$$A_{AREA\ TENSILE_1} = \frac{P_1}{\sigma_{MAX}} = \frac{32{,}000}{10{,}000} = 3.2\ IN^2$$

$$A_{TENSILE} = tL \Rightarrow t = 1'',\ \therefore\ L_{1\,MIN} = 3.2\ IN$$

$$A_{AREA\ SHEAR_1} = \frac{P_1}{\tau_{MAX}} = \frac{32{,}000}{10{,}000} = 3.2\ IN^2$$

$$A_{SHEAR} = 2th \rightarrow t = 1'' \therefore h_{1\,MIN} = 1.6\ IN_{MIN}$$

BY INSPECTION, THE AREAS (AND DIMENSIONS) ARE THE SAME FOR THE HOOK PIN ALSO

∴ WIDTH IS 5½" PIN + 3.2" = 8.7" MIN. → USE 10"

DISTANCE FROM BOTTOM OF PIN TO END OF PL IS: 1.6 INCH MINIMUM → USE 4".

578846

FERMILAB ENGINEERING NOTE	SECTION	PROJECT	SERIAL-CATEGORY	PAGE
	RD/MSD/MSG	KTeV	2.7.4	9

SUBJECT	NAME	DATE	REVISION DATE
SKETCH & WELD SIZING.	DAVE PUSHKA	18 AUG '95	

ALL MATERIAL IS MILD CARBON STEEL AISI 1018 OR EQUAL

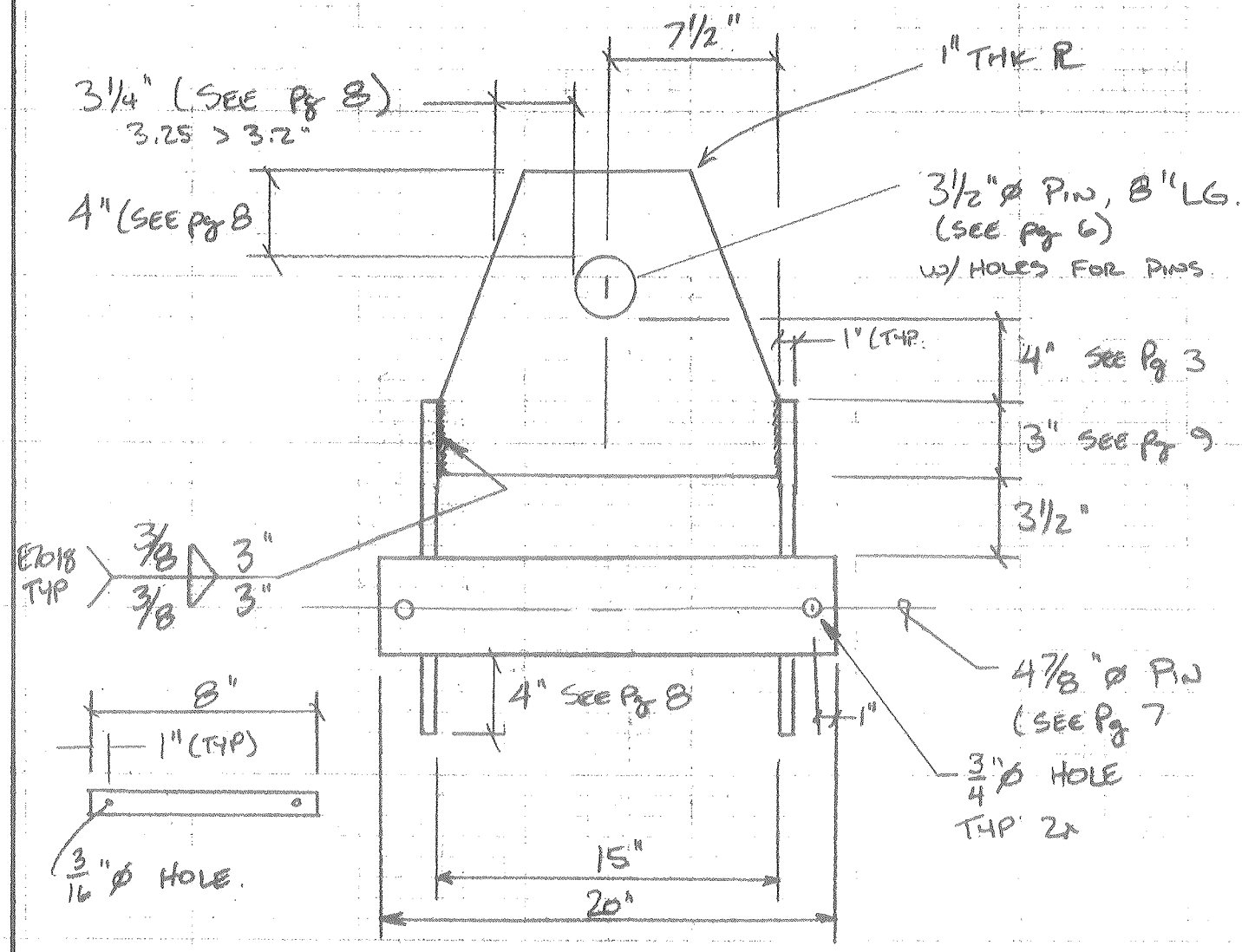

WELDS - LOAD = 32,000 PER (4) FILLET WELDS IN SHEAR -

$P = A \times F_v = 0.707 w \times l \times F_u$, $F_u = 21$ KSI FOR E-7018

TRY 5/16" FILLETS.

$$32{,}000 = (0.707)\left(\tfrac{5}{16}\right)(l \times)(21{,}000) \rightarrow l = \frac{32}{21}\,\frac{1}{(0.707)(5/16)} = 6.89''$$

TOTAL REQ'D LENGTH IS 6.89" ∴ IF (4) // WELDS ARE USED, $l_{MIN} = 1\tfrac{3}{4}''$

∴ USE $l = 3''$

578846

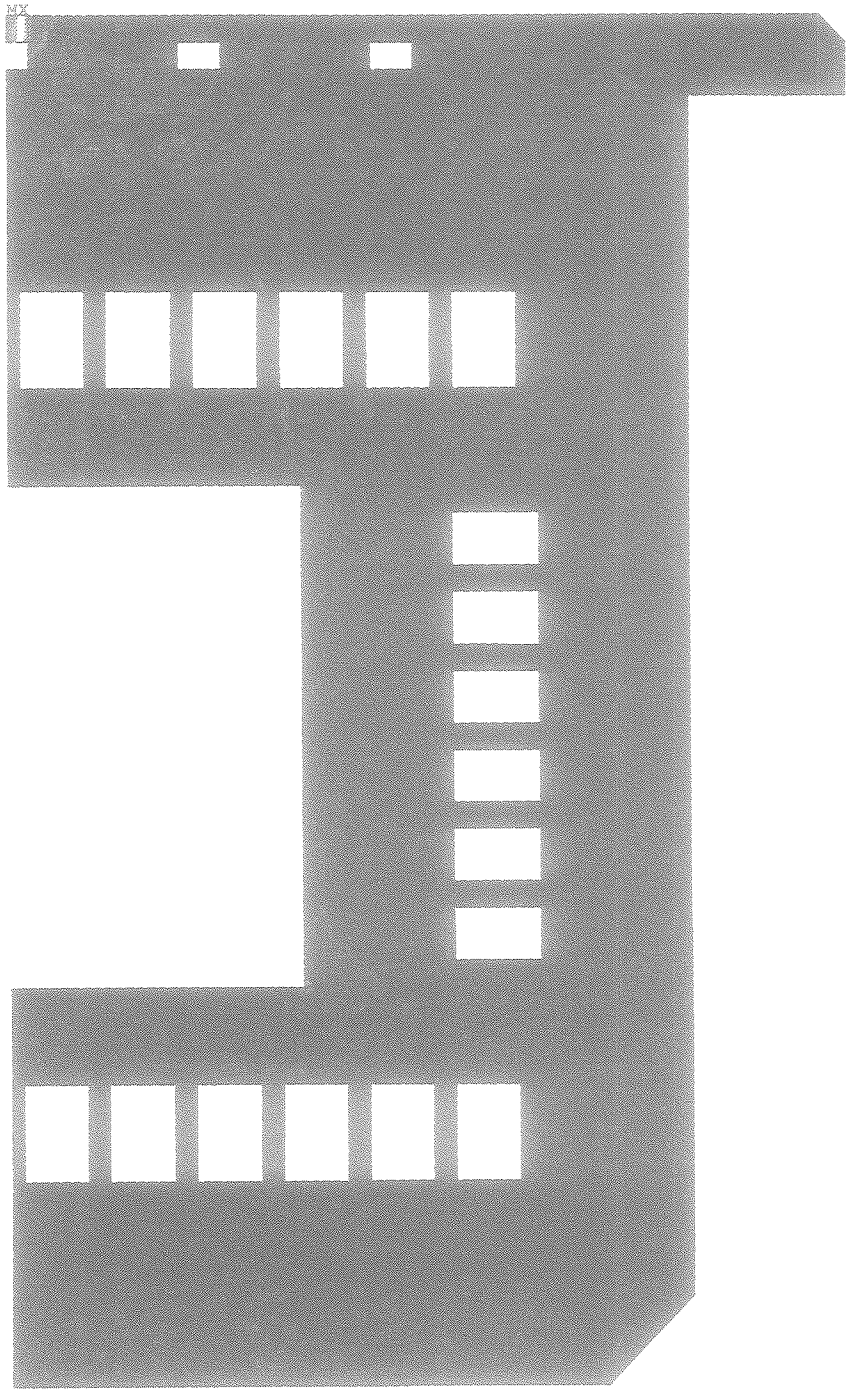

ANSYS 5.1
AUG 3 1995
09:25:01
PLOT NO. 2
NODAL SOLUTION
STEP=1
SUB =1
TIME=1
SEQV (AVG)
TOP
DMX =19.01
SMN =0.352474
SMX =56.787
SMXB=71.651

0.352474
6.623
12.893
19.164
25.434
31.705
37.975
44.246
50.516
56.787

Equivalent stress (N/mm²)
(x 145 ⇒ psi)

Spectrometer Anti

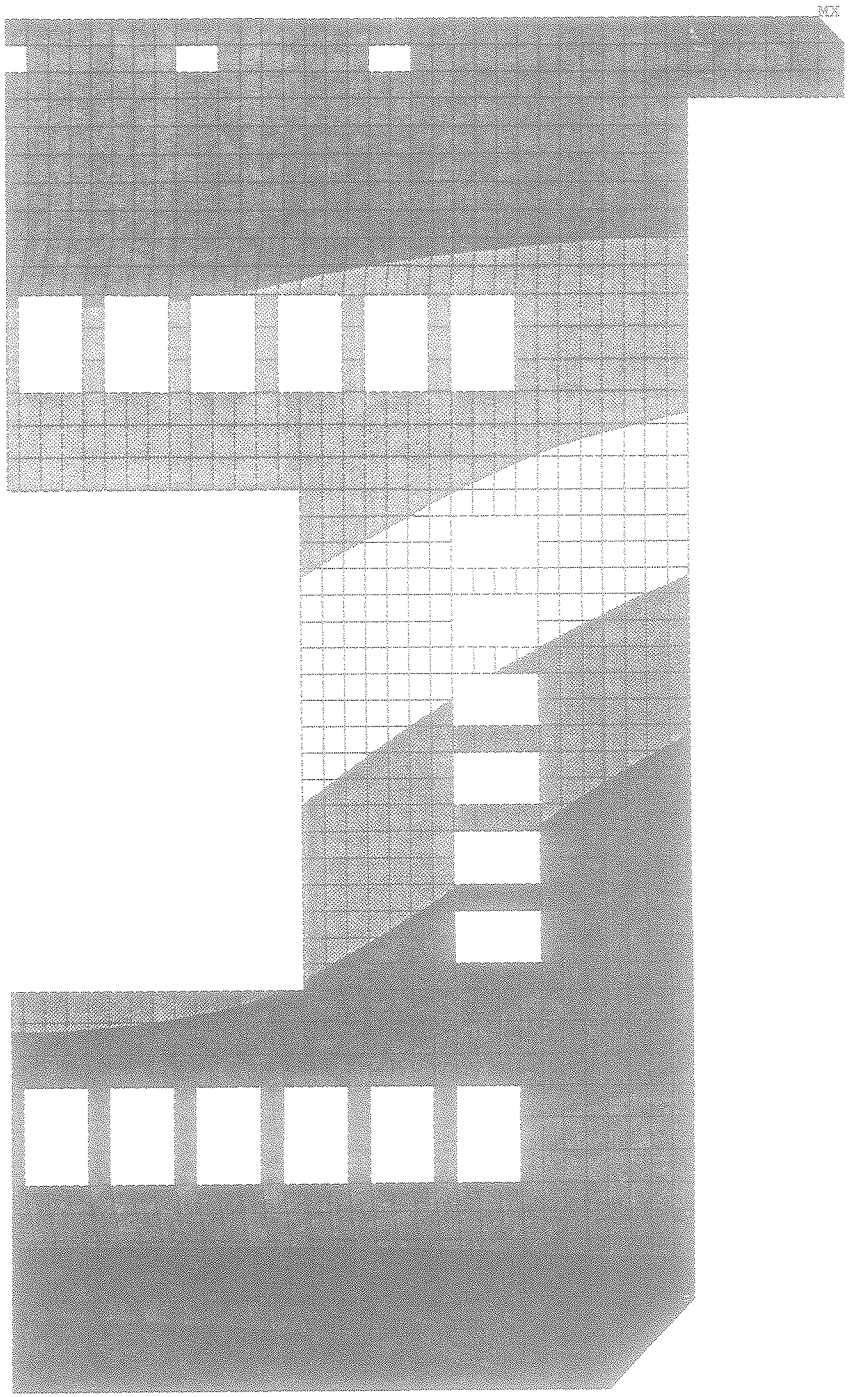

ANSYS 5.1
AUG 3 199
09:25:08
PLOT NO. 3
NODAL SOLUTION
STEP=1
SUB =1
TIME=1
UZ
TOP
RSYS=0
DMX =19.01
SEPC=39.912
SMN =-19.003
SMX =0.67272

-19.003
-16.817
-14.631
-12.445
-10.258
-8.072
-5.886
-3.7
-1.514
0.67272

displacement U_z (mm)

Spectrometer Anti

ANSYS 5.1
AUG 3 199:
09:27:13
PLOT NO. 4
DISPLACEMENT
STEP=1
SUB =1
TIME=1
RSYS=0
DMX =19.01
SEPC=39.912

DSCA=11.513
XV =1
DIST=2410
XF =1325
YF =2185
ZF =-105.515

displacement of
main plate

Spectrometer Anti

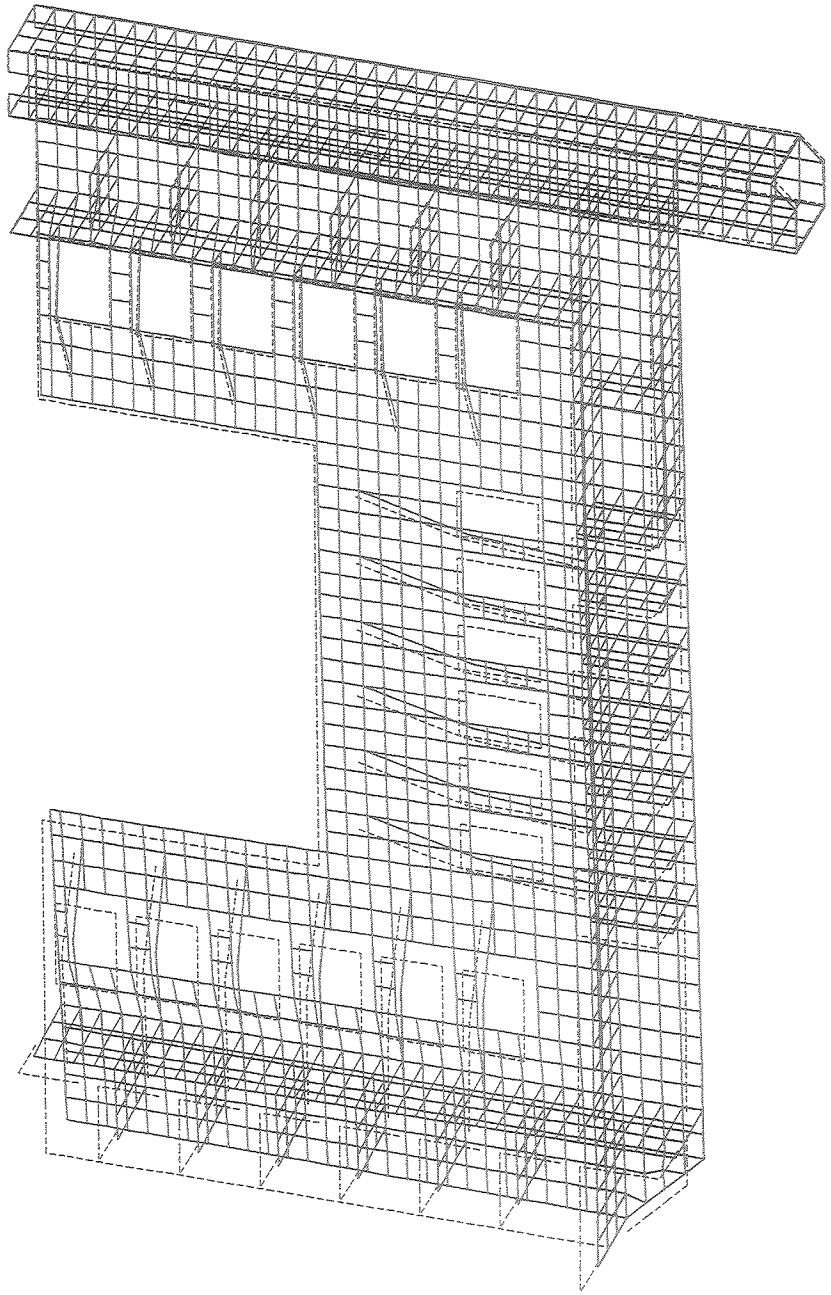

ANSYS 5.1
AUG 3 1995
09:23:16
PLOT NO. 1
DISPLACEMENT
STEP=1
SUB =1
TIME=1
RSYS=0
DMX =19.01
SEPC=52.382

DSCA=11.513
XV =1
YV =2
ZV =3
DIST=2431
XF =1325
YF =2179
ZF =34.184

displacement

Spectrometer Anti

FERMILAB ENGINEERING NOTE	SECTION RD/MSD/MSE	PROJECT KTeV	SERIAL-CATEGORY 2.7.4	PAGE 14
SUBJECT: Test Set-Up		NAME: Dave Pushka		
		DATE: 18 Aug '95	REVISION DATE	

TOTAL wt = 40,600 #

$\% = \frac{40.6}{32} = 126.8\%$

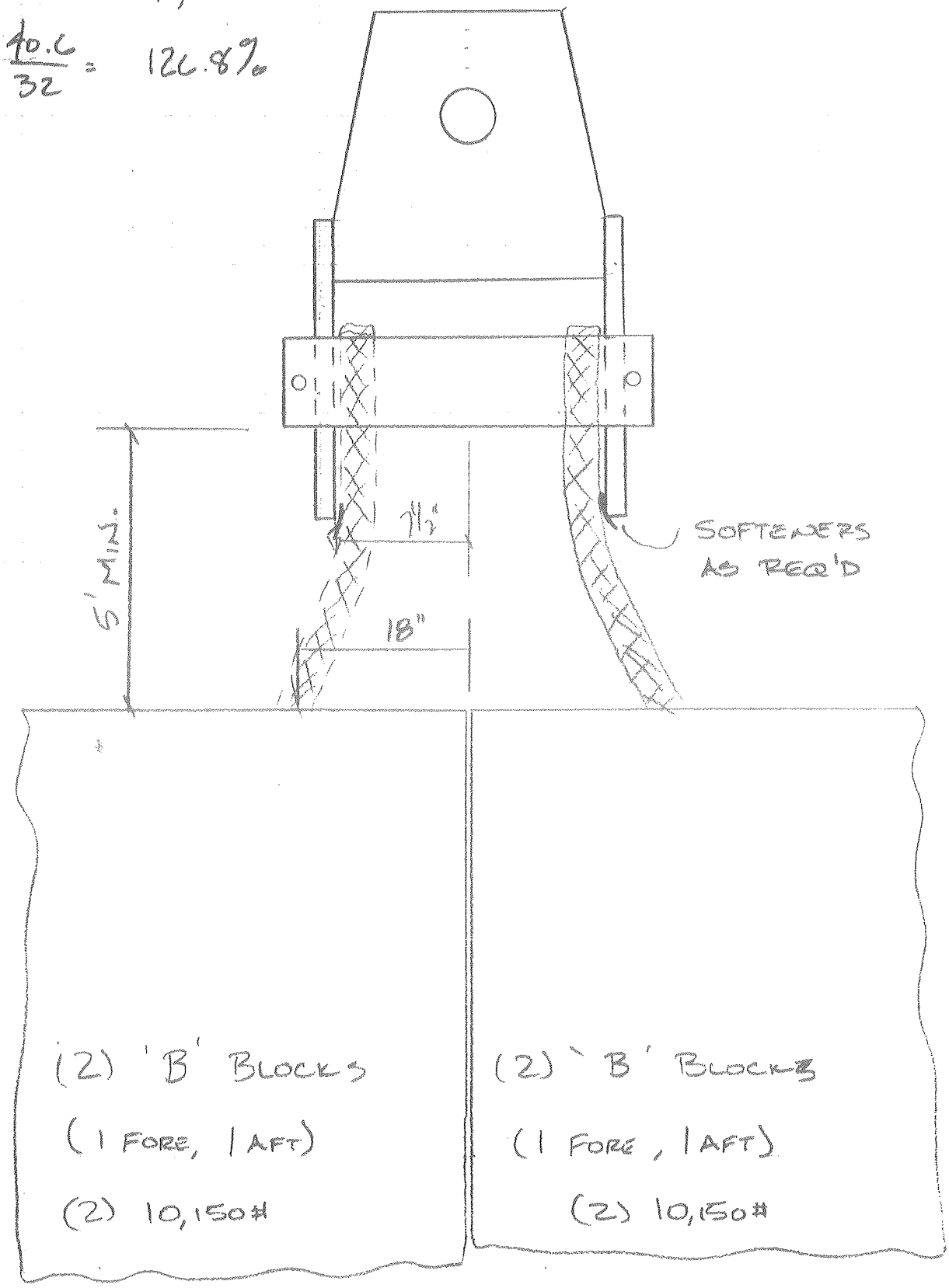

578846

Lifting of Spectrometer Anti

Zhijing Tang
October 18, 1995

Spectrometer Anti, when assembled and with the stand attached, will be lifted from the center hole. The structural stiffness and the stress near the lifting hole are of the concern of this EAR note.

Finite element analysis is done using the previously built SA model. This time, we support at the center whereas the stand acting as weights on the sides. Fig.1 shows the model with loads and constraint conditions. The weight of the stand is 4850 lb, half of it is 2425 bl. The total weight of the detector and the stand is 14540($\times$2) lb.

Fig.2 shows the out-of-plane displacement and Fig.3 is the equivalent stress. We see that the maximum displacement is 4 mm (0.157 in), and the maximum equivalent stress is 96 N/mm^2 (13920 psi).

To see the local stress near the lifting hole, we build another plate model with finer element mesh (Fig.4). The load of 12575 lb is from the previous analysis. Fig.5 shows the equivalent stress near the hole, the maximum value is 40714 psi. Figs.6 and 7 show the stress distributions of σ_x and σ_y.

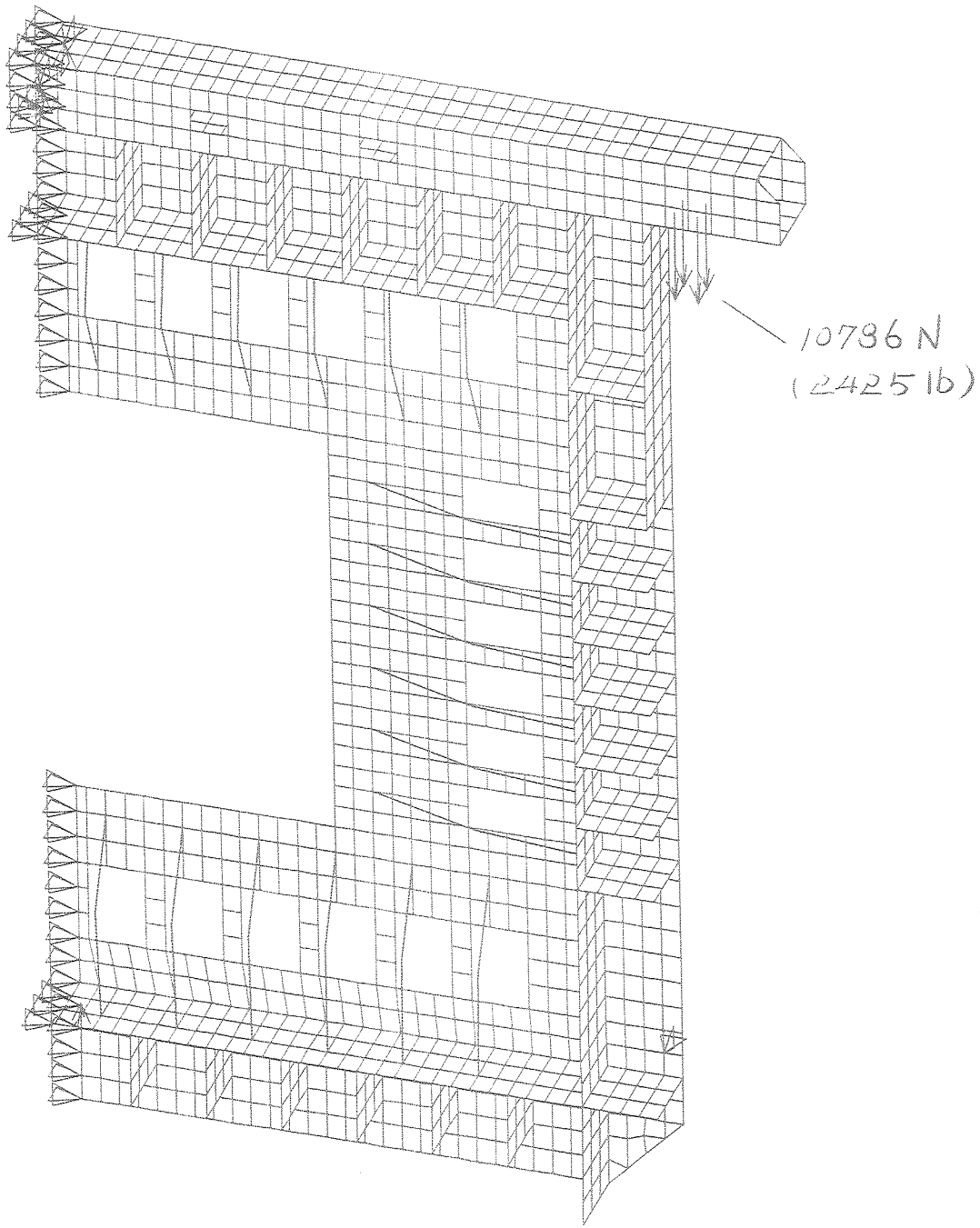

ANSYS 5.1
OCT 16 199-
10:44:33
PLOT NO. 1
ELEMENTS
TYPE NUM
U
F
ACEL

XV =1
YV =2
ZV =3
DIST=2359
XF =1325
YF =2188
ZF =139.7
PRECISE HIDDEN

Fig 1. model
Load & constraint

Spectrometer Anti

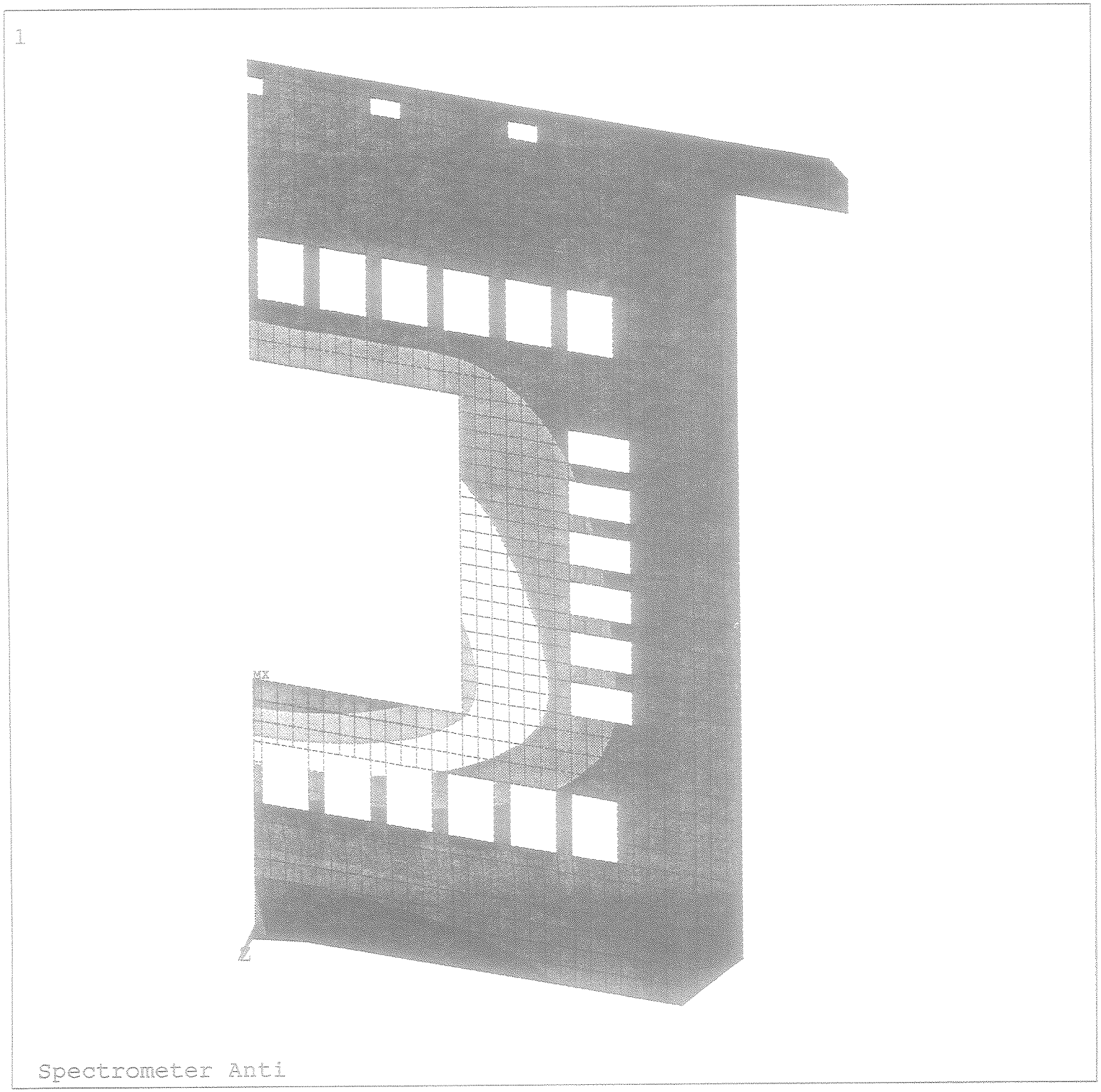

ANSYS 5.1
OCT 18 1995
10:31:56
PLOT NO. 2
NODAL SOLUTION
STEP=1
SUB =1
TIME=1
UZ
TOP
RSYS=0
DMX =4.165
SEPC=51.914
SMN =-2.771
SMX =4.093

-2.771
-2.009
-1.246
-0.483381
0.279268
1.042
1.805
2.567
3.33
4.093

Fig. 5
displacement
(mm)

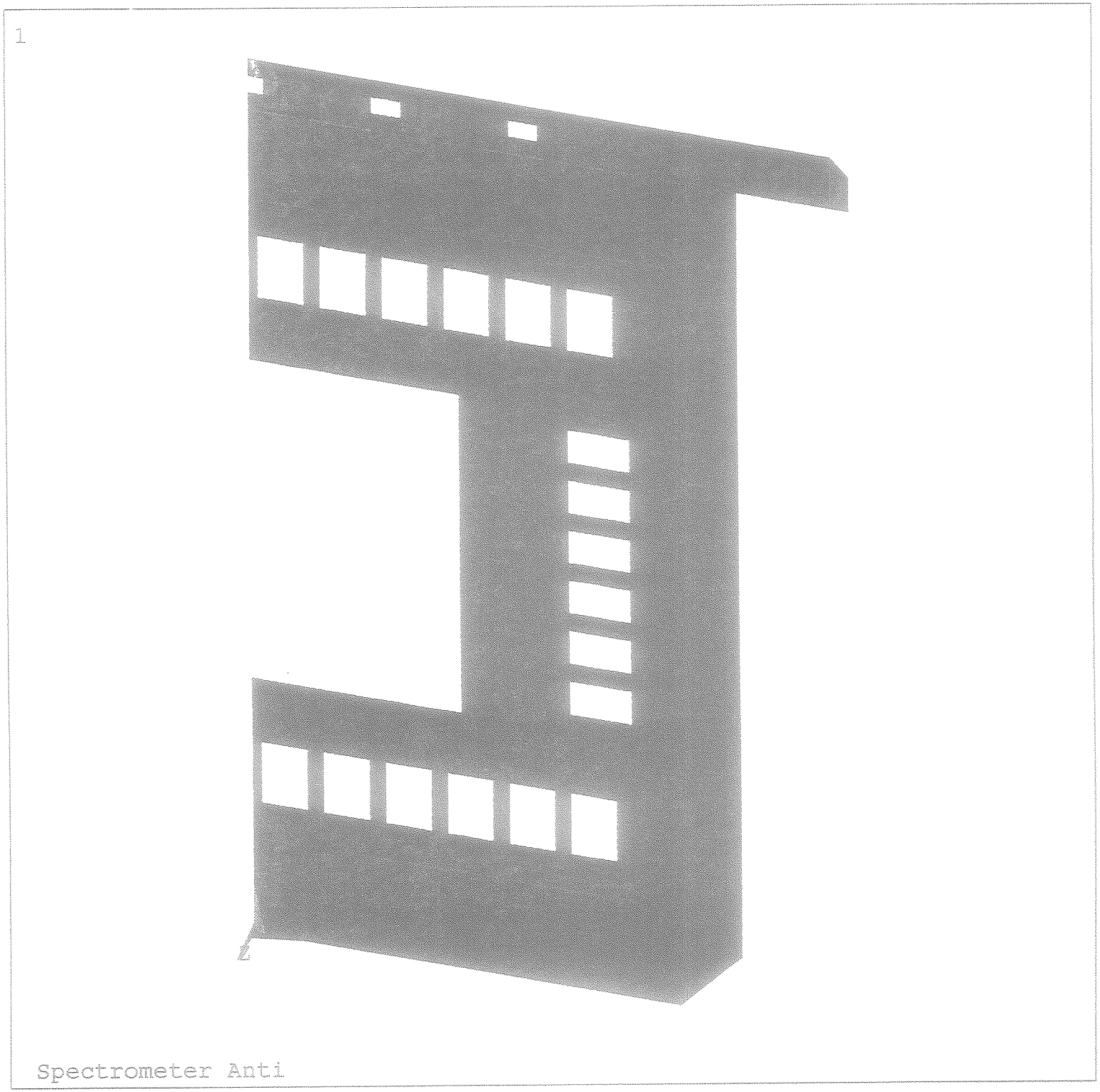

ANSYS 5.1
OCT 18 1995
10:31:50
PLOT NO. 1
NODAL SOLUTION
STEP=1
SUB =1
TIME=1
SEQV (AVG)
TOP
DMX =4.165
SMN =0.161138
SMX =95.886
SMXB=140.581

0.161138
10.797
21.433
32.069
42.705
53.341
63.978
74.614
85.25
95.886

↓

13904 psi

Fig. 5
Equivalent Stress
(N/mm²)

ANSYS 5.1
OCT 16 1995
10:49:43
PLOT NO. 1
ELEMENTS
TYPE NUM
U
F

ZV =1
DIST=13.75
XF =12.5

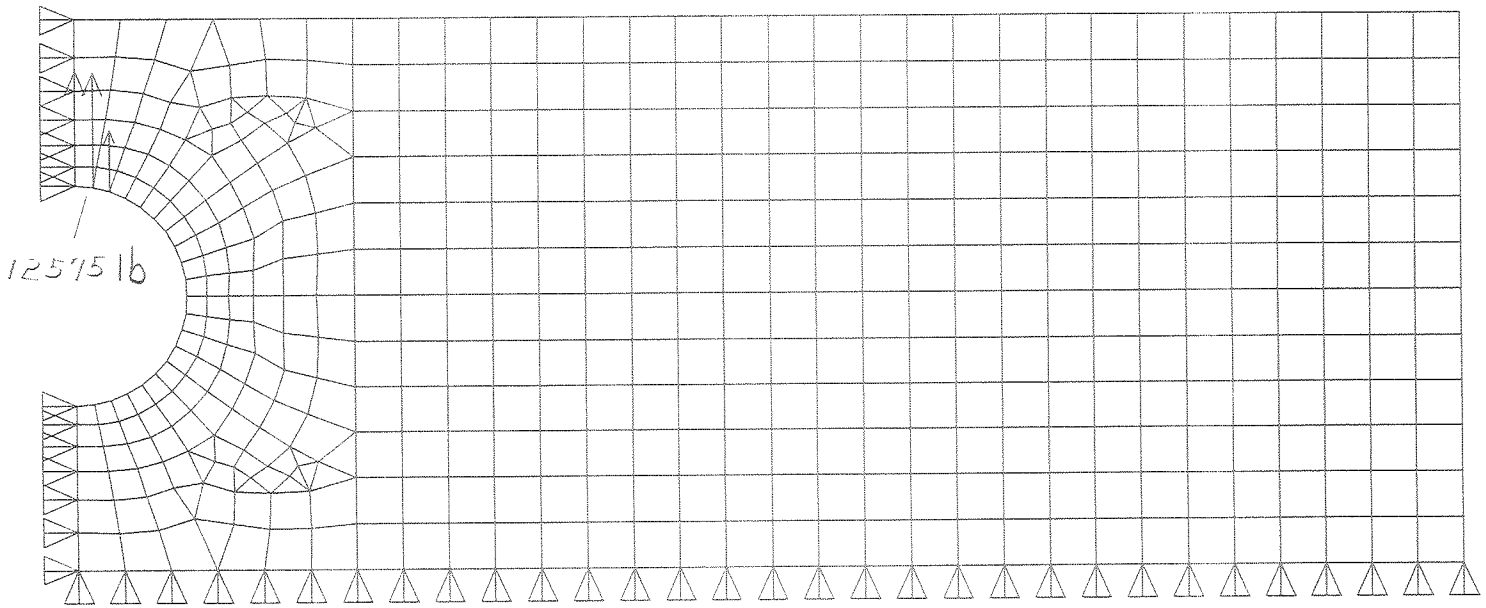

Fig. 4

Local stress near the lifting hole

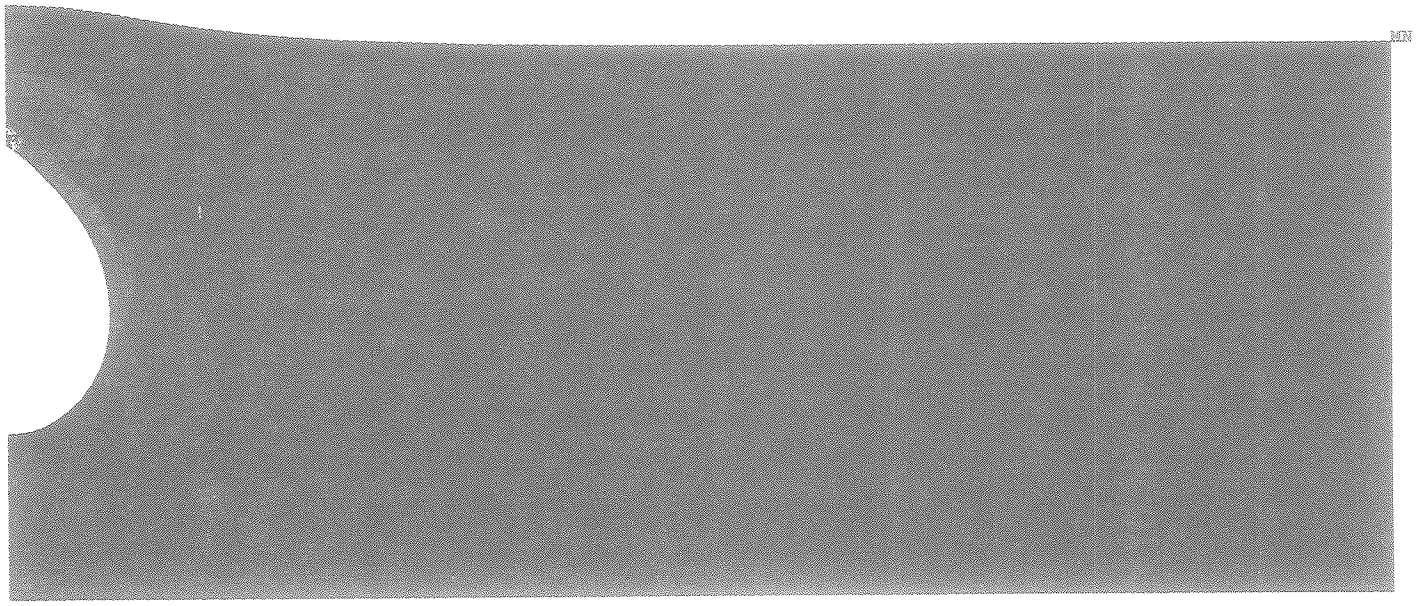

ANSYS 5.1
OCT 18 1995
11:06:12
PLOT NO. 1
NODAL SOLUTION
STEP=1
SUB =1
TIME=1
SEQV (AVG)
TOP
DMX =0.010946
SMN =1.764
SMX =40714
SMXB=50134

1.764
4525
9049
13572
18096
22619
27143
31667
36190
40714

Fig. 5
equivalent stress
(psi)

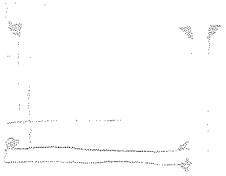

Local stress near the lifting hole

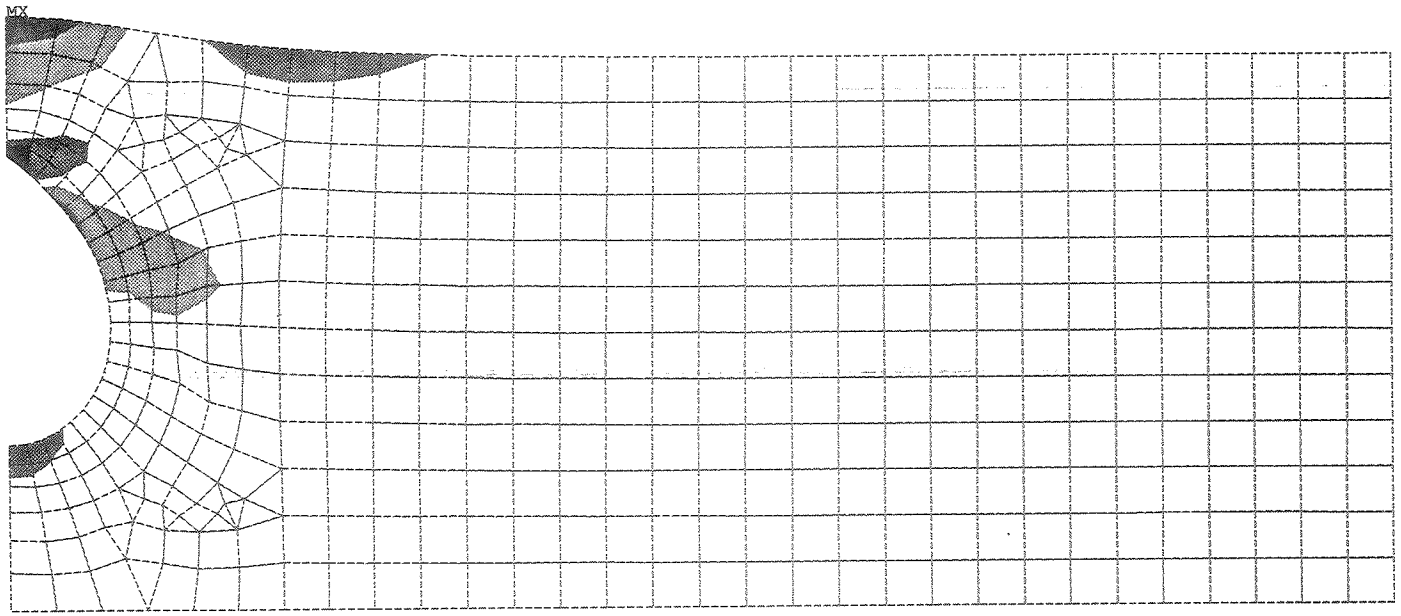

ANSYS 5.1
OCT 18 1995
11:06:16
PLOT NO. 2
NODAL SOLUTION
STEP=1
SUB =1
TIME=1
SX (AVG)
TOP
RSYS=0
DMX =0.010946
SMN =-30912
SMNB=-40332
SMX =11936
SMXB=14336

-30912
-26151
-21390
-16629
-11868
-7107
-2346
2415
7176
11936

Fig. 6 σ_x

Local stress near the lifting hole

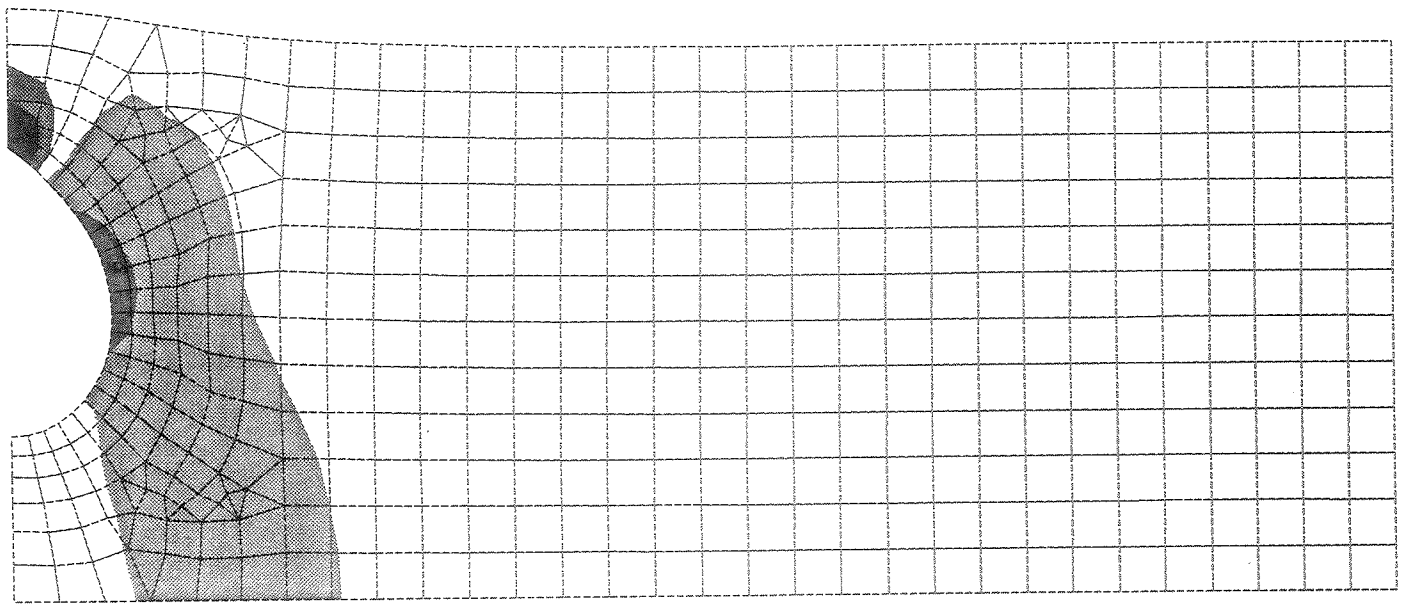

Fig. 7 σ_y

Local stress near the lifting hole

DATE: 18 AUG '95

RESEARCH DIVISION
MECHANICAL SUPPORT DEPARTMENT
DESIGN AND DRAFTING GROUP
WH 11 E MS - 219

LOUIS KULA - Group Leader
(708) 840-3166 P-0476

CHUCK NILA - Deputy Leader
(708) 840-4311 P-0549

DESIGN AND DRAFTING REQUEST
ACTIVITY SUMMARY

REQUESTOR / Division	EXT/PAGE	DESIGN & DRAFTING GROUP PROJECT NO.
DAVE POSHKA	8727 B 0905	
PROJECT LEADER / Division	EXT/PAGE	
GREG BOCK	—	

SPECIFIC PROJECT TITLE
KTEV SA LIFTING FIXTURE

BUDGET CODE (If Applicable)	APPROVALS	DATE

DESCRIPTION OF WORK: Provide available specifications, design information, revisions, additions, and special instructions.

PREPARE FAB DWG FOR LIFTING FIXTURE AS SKETCHED IN CALCS.

SCHEDULE : START DATE _____ DATE REQUIRED _____

Assigned by / Date:	Assigned to:	Drawing Category / Series No.

JOB STATUS / REVIEW :

FERMILAB ENGINEERING NOTE	SECTION	PROJECT	SERIAL-CATEGORY	PAGE
	RD/MSD/MSG	KTEV	274	1

SUBJECT	NAME	
SA LIFTING FIXTURE – SA FRAME RE-INFORCEMENT	DAVE POSHKA	
	DATE 18 OCT '95	REVISION DATE

RESULTS FROM Z. TANG'S FEA ANALYSIS INDICATE THAT THE LOCAL BEARING STRESS EXCEEDS THE ALUM. ASSOC. ALLOWABLES FOR 6061-T6. THE ALLOWABLE IS 23 KSI IN BEARING AND 10/18 NOTE BY TANG INDICATES A LOCAL STRESS OF 40,714 PSI. THEREFORE INCREASE THE AREA TO REDUCE THE STRESS.

ORIGINAL PL THICKNESS = 3/4"

$$(40{,}714 \text{ psi})(3/4") = 30{,}535 \text{ POUNDS/INCH}$$

$$\text{REQ'D THICKNESS} = \frac{P'}{\sigma_{ALLOW}} = \frac{30{,}535 \text{ POUNDS/INCH}}{23{,}000 \text{ POUNDS/IN}^2}$$

$$= 1.32 \text{ INCHES.}$$

∴ ADD 1" PLATE 'DOUBLERS' TO BOTH WEBS OF THE BOX BEAM ON THE TOP OF THE SA-FRAME

TOTAL THICKNESS BECOMES $3/4" + 1" = 1\,3/4" > 1.32"$

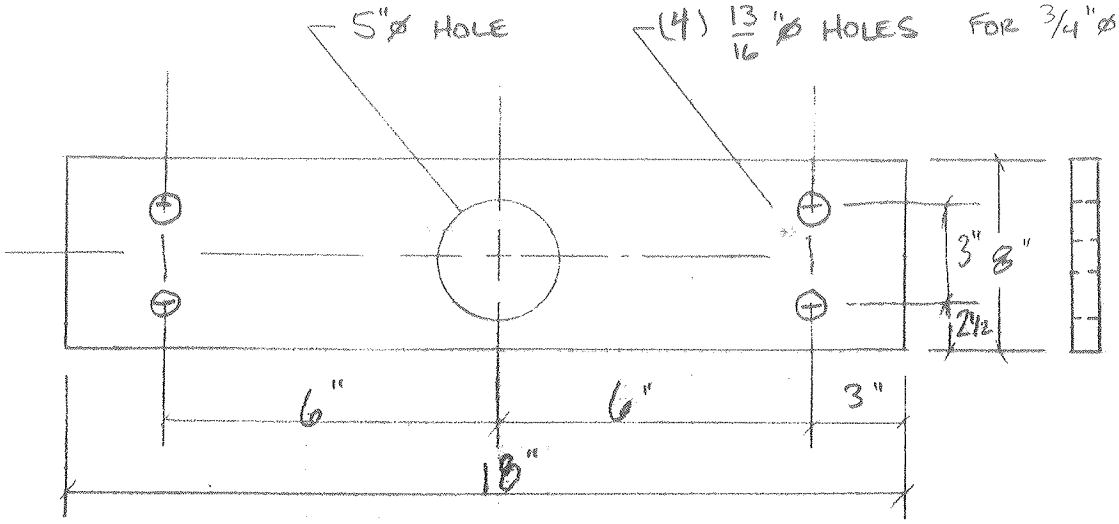

578846