LIFTING DEVICE

DEVICE NAME: SA MODULE INSTALLATION FIXTURE

ENGINEERING NOTE NUMBER: 81

DRAWING NUMBER: N/A - SEE DWG'S INCLUDED HEREIN

APPLICABLE STANDARD: ASME B30.20

AISC 9th EDITION ASD

RATED LOAD: 746 #

TEST LOAD: 1000 #

TEST LOAD PERCENT: 134%

LAST LOAD TEST DATE: 7 SEPT '95

COLOR: UN-PAINTED ALUMINUM & BLACK PAINTED STEEL

STRESS CALCULATIONS:

Done by: G. SCHULTZ - UNIV. OF COLORADO

Date: APRIL 1995

Reviewed by: [illegible]

Date: AUG. 30, 1995

REMARKS:

IDENTIFICATION:

Engineering Note Number & Rated Load Must be Clearly Marked On a Conspicuous Surface.

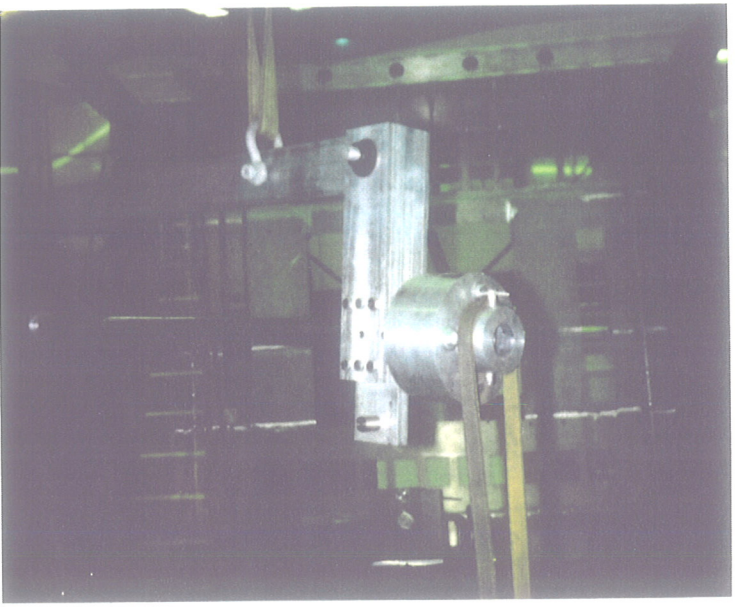

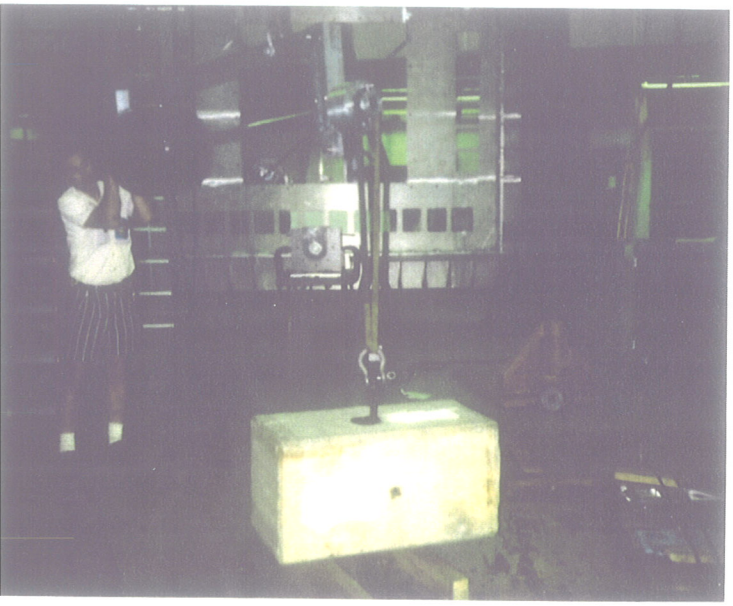

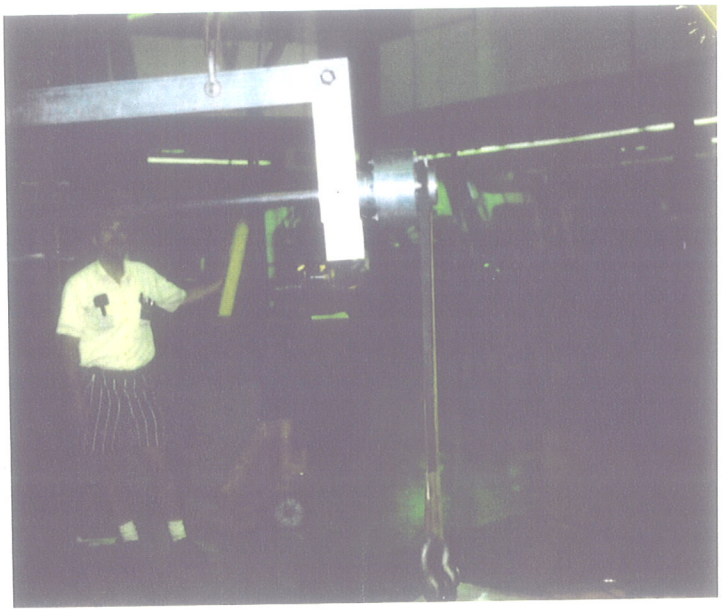

From: FNALV::CGROZIS "Chas" 8-SEP-1995 07:48:25.76
To: PUSHKA
CC: CGROZIS
Subj: SA MODULE LIFTING FIXTURE LOAD TEST

Dave,as I had mentioned the load test was done yesterday(9-8-95)at lab A. The test weight required was 9331bs.For the weight we used a "F"shielding block(10001bs.).The total weight including the fixture was 16501bs.The test was successful and the fixture is now labelled with I.D.#81.

LIFTING DEVICE

DEVICE NAME: SA MODULE INSTALLATION FIXTURE

ENGINEERING NOTE NUMBER: 81

DRAWING NUMBER: N/A - SEE DWG'S INCLUDED HEREIN

APPLICABLE STANDARD: ASME B30.20

AISC 9th EDITION ASD

RATED LOAD:

TEST LOAD:

TEST LOAD PERCENT:

LAST LOAD TEST DATE:

COLOR: UN-PAINTED ALUMINUM & BLACK PAINTED STEEL

STRESS CALCULATIONS:

Done by: G. SCHULTZ - UNIV. OF COLORADO

Date: APRIL 1995

Reviewed by:

Date:

REMARKS:

IDENTIFICATION:

Engineering Note Number & Rated Load Must be Clearly Marked On a Conspicuous Surface.

MECHANICAL SUPPORT DEPARTMENT
ENGINEERING NOTE

NUMBER: MSD EN-1.1.3 - KTeV
(WBS number items 1.1.3)

DATE: 14 March 1995

TITLE: Design Note for the Lifting Fixture used to install the SA Modules

AUTHOR(s): Dave Pushka and Gary Schultz of the University of Colorado

REVIEWER: August 1995

KEY WORDS: Lifting Fixture, SA Modules, SA's, KTeV

ABSTRACT/SUMMARY:

G. Schultz of the University of Colorado prepared a set of calculations to verify the member sizing for the lifting fixture to be used for installing the SA Modules. See Sections 4 and 5.

I examined his calculations and prepared the following two pages of calculations (See Sections 1 and 2) to address two apparent omissions from the University of Colorado calculations. These calculations wee forwarded to G. Schultz and he revised his calculations with the additional information included in Sections 6 and 7.

Eric Erdos prepared drawings for the Lifting fixture. See Section 8. These drawings were prepared after the review of the Cad sketch prepared by G. Schultz was deemed un-acceptable to document the fixture. This determination was made by B. Cyko and his comments are included in Section 9. My request for the DDG review is included in Section 10.

University of Colorado has not prepared a module lifting procedure and therefore, the adequacy of this lifting fixture for the proposed usage must be verified by FNAL.

This design note contains the additional calculations required to size member used for the lifting fixture. Allowable stresses are based on those calculated from Aluminum Association Publication 30 and from ASME B30.20 'Under-the-Hook Lifting Fixtures'. The most conservative of the two values calculated from each Code was used.

Table of Contents:

Section	Description	PAGE
1.	Cover Letter of Calculations Transmitted to G. Schultz	iii
2.	Round Beam	1 of 2
3.	Rectangular Lifting Beam	2 of 2
4.	Fax Cover Sheet from Gary Schultz of the University of Colorado	un-numbered
5	G. Schultz Calculations on the SA Lifting Fixture	Pages numbered 1 through 4
6.	G. Schults Revised Calculations on the SA Lifting Fixture	Pages numbered 4, 5, 1, 2, and 3
7.	Cad Sketch of lifting Fixture by G. Schultz	Un-numbered
8.	SA Lifting Fixture Drawings by Eric Erdos of the University of Colorado	12 un-numbered Pages
9.	Comments By Bill Cyko (RD/MSD/DDG) on the quality of the Drawings prepared by the University of Colorado on the Lifting Fixture	1 Page
10.	Drafting Request for Item 9	2 Pages

Fermilab
KTeV Experiment
MS 231

14 March 1995

To: G. Schultz @ the University of Colorado
FAX Number 303/492/5199
cc: D. Jensen - MS 231
G. Bock - MS 231 (w/o attachments)

From: Dave Pushka

Subj.: Comments on the SA Module Installation Lifting Fixture Calculations.

Dear Gary:

I've looked over your calculations and have only a few minor comments:

1) The yield stress of hardware store variety bolting (SAE Grade 2) is usually about 45 ksi. Your value of 36 ksi is conservative.

2) I calculate a different stress for the round beam (see attached Page 1 of 2) but it is still below the allowable value.

3) The rectangular beam needs to be checked for lateral stability. I've essentially done that on page 2 of 2. The member is sufficient.

I would like to have un-faxed copies of the calculations (revised to address items 2 and 3 above - this may done by attaching my calculations if you desire) and final, signed off fabrication drawings to submit for an independent checking of the calculations. As soon as you can provide the clean calculations and the drawings, I'll get the checking started and make arrangements for the proof test.

Sincerely,

Dave Pushka

Fermilab
KTeV Experiment
MS 231

14 March 1995

To: G. Schultz @ the University of Colorado
FAX Number 303/492/5199
cc: D. Jensen - MS 231
G. Bock - MS 231 (w/o attachments)

From: Dave Pushka

Subj.: Comments on the SA Module Installation Lifting Fixture Calculations.

Dear Gary:

I've looked over your calculations and have only a few minor comments:

1) The yield stress of hardware store variety bolting (SAE Grade 2) is usually about 45 ksi. Your value of 36 ksi is conservative.

2) I calculate a different stress for the round beam (see attached Page 1 of 2) but it is still below the allowable value.

3) The rectangular beam needs to be checked for lateral stability. I've essentially done that on page 2 of 2. The member is sufficient.

I would like to have un-faxed copies of the calculations (revised to address items 2 and 3 above - this may done by attaching my calculations if you desire) and final, signed off fabrication drawings to submit for an independent checking of the calculations. As soon as you can provide the clean calculations and the drawings, I'll get the checking started and make arrangements for the proof test.

Sincerely,

Dave Pushka

FERMILAB ENGINEERING NOTE	SECTION RD/MSD/MEG	PROJECT KTeV	SERIAL-CATEGORY 1.1.3	PAGE 1/2

SUBJECT	NAME	
SUPPLEMENTARY CALCS ON UNN OF COLORADO SA MODULE LIFTING FIXTURE.	D. PUSHKA	
	DATE 3-14-95	REVISION DATE

ROUND BEAM:

G. SCHULTZ SPLITS THIS BEAM INTO TWO HALVE FOR ANALYSIS ON PG 3 OF HIS CALCS. THIS IS INCORRECT AS THE SAME CONNECTION CAN NOT BE BOTH A MOMENT CONNECTION AND A SIMPLE CONNECTION.

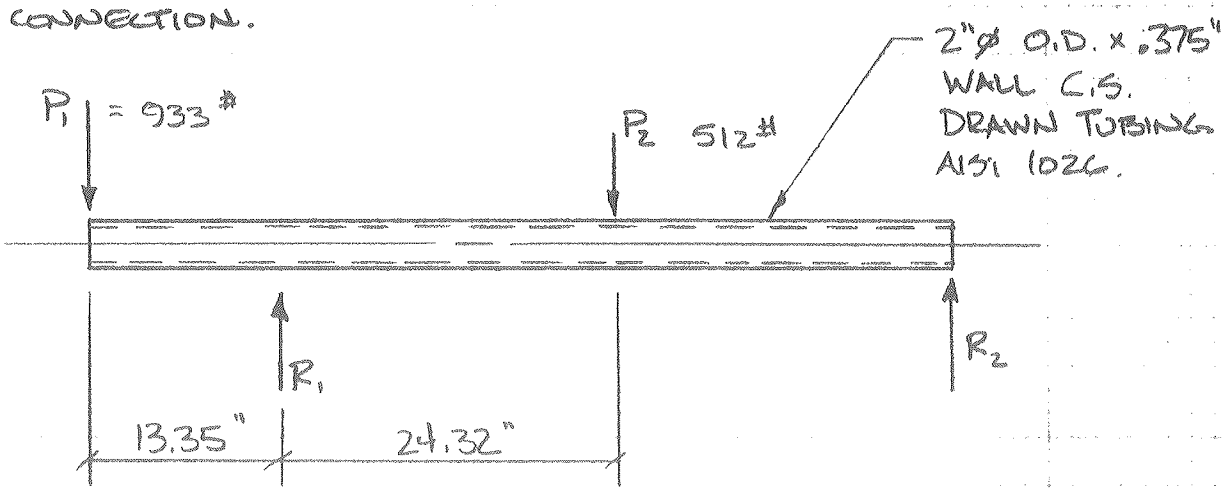

IN THE 'BALANCED CONDITION' THE ASSEMBLY BALANCES @ R_1 AND R_2 GOES TO ZERO. I ASSUME THE DEFLECTIONS AND CLEARANCES @ R_1 ARE SUCH THAT NO APPRECIABLE MOMENT CAPACITY IS PROVIDED. THEREFORE,

$$M_{MAX} = (933\#)(13.35") = 12{,}455 \text{ IN-LBS.}$$

$$\sigma = \frac{My}{I} = \frac{(12{,}455 \text{ IN-LBS})(\frac{1}{2}d)}{\frac{\pi}{64}(d_{OD}^4 - d_{ID}^4)} = \frac{(12{,}455 \text{ IN-LBS})\ \frac{32}{\pi}(2")}{2^4 - (2-(2)(.375))^4}$$

$$= \frac{(64/\pi)(12{,}455 \text{ IN-LBS})}{13.558 \text{ IN}^4} = 18{,}713 \text{ PSI} \approx 18.7 \text{ KSI}$$

F_{YIELD} FOR THIS MAT'L (A513 TYPE 5, A.K.A. AISI 1026) = 75 KSI

$$\therefore\ \sigma \le \frac{F_y}{3}\ \therefore\ \text{OK}$$

LATERAL BENDING CRITERIA CHECK IS NOT APPLICABLE TO DOUBLY SYMMETRIC SECTIONS.

567461

FERMILAB ENGINEERING NOTE	SECTION	PROJECT	SERIAL-CATEGORY	PAGE
	RD/MSD/MGG	KTEV	1.1.3	2/2

SUBJECT	NAME	
SUPPLEMENTARY CALCS ON UNIV. OF COLORADO SC MODULE LIFTING FIXTURE.	DANE PUSHKA	
	DATE 3-14-95	REVISION DATE

RECTANGULAR LIFTING RAIL – 1" x 4" x 70" LG (66" SPAN)
6061-T6 ALUMINUM BAR.

FROM ALUM. ASSOC. PUB 30, THE ALLOWABLE STRESS IS 28 ksi FOR $L < S_1$.

$$S_1 = \frac{d}{t}\sqrt{\frac{L_b}{d}} \leq 13$$

$$\frac{d}{t}\sqrt{\frac{L_b}{d}} = \frac{4''}{1''}\sqrt{\frac{66}{4}} = 16.2$$

SINCE $13 < S_1 < 29$ THE ALLOWABLE STRESS IS GIVEN BY:

$$\sigma_{\substack{MAX \\ ALLOW}} = 40.5 - 0.93\frac{d}{t}\sqrt{\frac{L_b}{d}}$$

$$= 40.5 - 0.93(16.2) = 25.3 \text{ ksi}$$

25.3 ksi IS GREATER THAN $\frac{F_{YIELD}}{3}$ ∴ USE $\sigma_{MAX} = \frac{F_{YIELD}}{3}$

AS G. SCHULTZ HAS DONE ON HIS PAGE 4.

587461

Fax Cover Sheet

University of Colorado at Boulder
Department of Physics
High Energy Physics Group

Campus Box 390
Boulder, CO 80309-0390
Phone: 303 492 1228
Fax: 303 492 5119

From: G. Schulz

Date: 3/8/95

To: DAVE PUSHKIN

Institution: FNAL

Department:

Fax Number: (708) 840-2950

Dear Dave!

Please find DWG's and calculations for transfer fixture. Please let me know, if you need additional information.

G. Schulz

# of pages (including cover sheet)

17

P.S. I will be on vacation after 3/10/95

WEIGHT (MATERIAL) LIST

1 EA AL RECT BAR 1x4x70" LONG @ 4.7 LBS/FT	=	27.41
4 EA AL RECT. BAR 1x4x16.5 LONG @ 4.7 LBS/FT	=	25.85
4 EA AL RECT BAR .5x4x16.5 LONG @ 2.35 LBS/FT	=	12.92
1 EA AL RECT. BAR 1x4x12.5 @ 4.7 LBS/FT	=	4.90
1 EA ROUND MECH. TUBING 2" OD x .375 WALL x 77.75 LONG @ 6.50	=	42.15
		113.23
ADDITIONAL 10% FOR HARDWARE ETC.		11.3
TOTAL EST. WEIGHT		124.55

SINCE THIS A BELOW HOOK LIFTING DEVICE, STATIC STRESS CALCULATIONS WILL NOT EXCEED 33% OF YIELD THE LOAD ON SUCH LIFTING DEVICE WILL BE 125% OF ACTUAL LOAD.

THE HEAVIEST MODULE ON KTEU WILL BE SA2-ICM WITH A WEIGHT OF 746.44 LBS EA. x 1.25 = 933.0

COUNTER WEIGHT CONSISTS OF 8x45 LB + 2x25 LBS, A TOTAL OF 410 LBS x 1.25 = = 512.5

* 6061 T6 AL YIELD = 37 KSI x 33% = 12.2 KSI

SHEAR = 27 KSI x 33% = 8.91 KSI

* ROUND MECH. TUBING (DRAWN OVER MANDREL)

YIELD = 75 KSI x 33% = 24.75 KSI

ANY BOLTS USED WILL BE ASSUMED TO BE ASTM

A 36 = 36 KSI x 33% = 11.88 KSI

ESTIMATED WEIGHT OF FIXTURE (SEE PAGE 1) = 124.55

EST. WEIGHT OF WEIGHT + COUNTER WEIGHT (125%) = 1445.5 L

A) 1" DIA BOLT
(ASSUMING ALL WEIGHT IS BELOW ONE BOLT) THE SHEAR TO THIS BOLT WOULD BE $\frac{F}{A} = \frac{1445.5}{.838 \text{ (Root Dia)}} = \underline{1724.9 \text{ PSI}}$

SHEAR (MAX.) OF 1" DIA BOLT is:

$$r^2 \pi = .419^2 \times 3.14 = .55 \text{ in}^2$$

$$.55 \text{ in}^2 \times 36000 \text{ psi} \times .33 = \underline{\underline{6548.9 \text{ PSI}}}$$

B 3 EA 1/2" DIA BOLTS (ASSUMING ALL WEIGHT ON BOLTS)

SHEAR ON 3 BOLTS WOULD BE $\frac{F}{3A} = \frac{1445.5}{3 \times .4} = \underline{1205.6 \text{ LBS}}$

SHEAR (MAX.) OF 3 1/2 DIA BOLTS ARE

$$3 r^2 \pi = 3 \times .2^2 \times 3.14 = .376 \text{ in}^2$$

$$.376 \text{ in}^2 \times 36000 \text{ psi} \times .33 = \underline{\underline{4476.4 \text{ LBS}}}$$

NOT TO SCALE

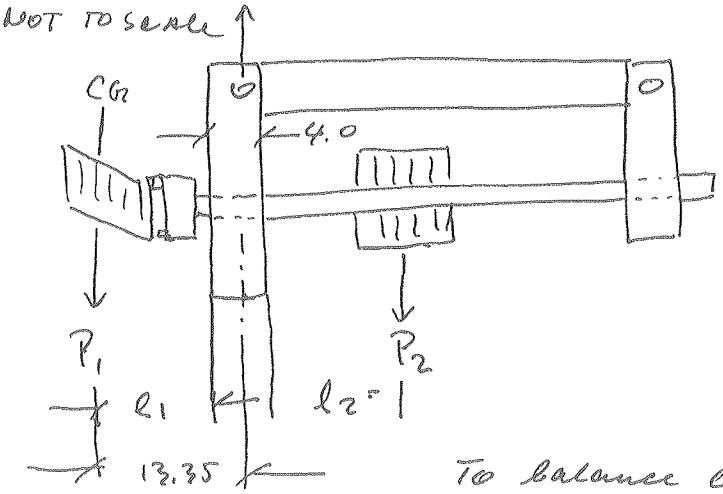

$P_1 = 933$ LBS (125%)

$P_2 = 512.5$ LBS (125%)

$l_1 = 13.35''$

$l_2 = 18.657''$

To balance counterweight, the Ratio is $\frac{933}{512.5} = 1.82$

For every inch from the point of rotation of the weight the counterweight has to move 1.82" in order to balance

Note P_1 is the heaviest of modules (SA2 ICM)

P_1 = Round beam fixed on one end, loaded on the other. f = stress in extreme fiber

$$f = \frac{10.18\, l_1 P_1}{d^3} = \frac{10.18 \times 11.35 \times 933}{2^3}$$

$$= \frac{10.18 \times 11.35 \times 933}{8} = \underline{13475.2 \text{ PSI}}$$

ALLOWABLE 24.75 KSI

P_2 = Round beam supported on both ends, single unsymmetric load

$$f = \frac{10.18 \times P_2 \times a \times c}{d^3\, l}$$

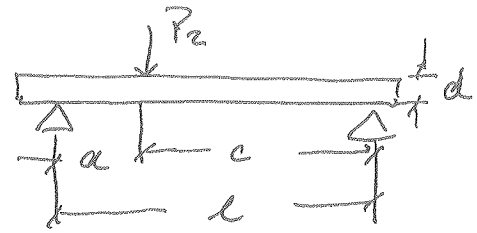

$$= \frac{10.18 \times 512.5 \times 20.7 \times 39.0}{496}$$

$$= \underline{8491.7 \text{ PSI}}$$

ALLOWABLE 24.75 KSI

$P_2 = 512.5$ LBS

$l = 62.0''$

$c = 39.0$

$a = 20.7$

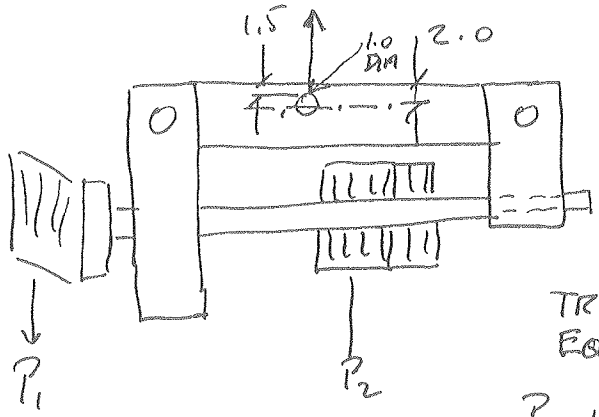

NOT TO SCALE

TRANSFER FIXTURE IN EQUILIBRIUM

$P_1 + P_2 = 1445.5$ LBS

FIXTURE $- \underline{124.5}$ LBS

1570.0 LBS

DIAGRAM:
RECT. BEAM

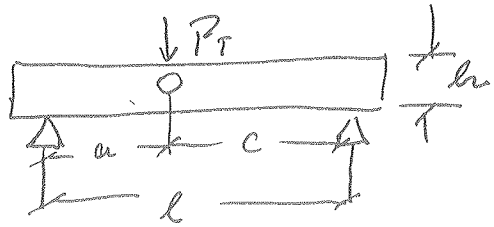

$P_{TOTAL} = 1570.0$ LBS

$l = 62.00''$

$a = 20.7$

$c = 39.0$

$h = 4.0$

$b = 1.0$

Stress in extreme fiber

$$f = \frac{6Pac}{bh^2l} =$$

$$= \frac{6 \times 1570 \times 20.7 \times 39.0}{1 \times 16 \times 62}$$

$$= \frac{7604766.0}{992} = 7666.09 \text{ PSI}$$

ALLOWABLE 12.2 KSI

TENSION OF MATERIAL AT HOLE OF CROSS BAR WHEN UNDER LOAD

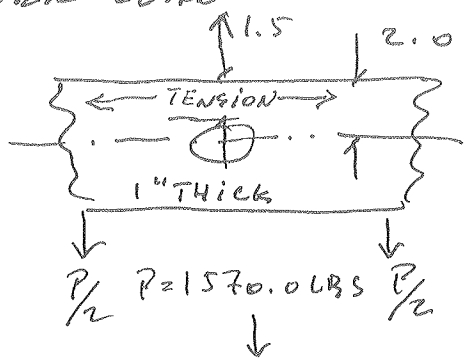

$1.5 \times 1 = 1.5 \text{ in}^2 \times 12.2$ KSI ALLOW.

$= 18.3$ KSI

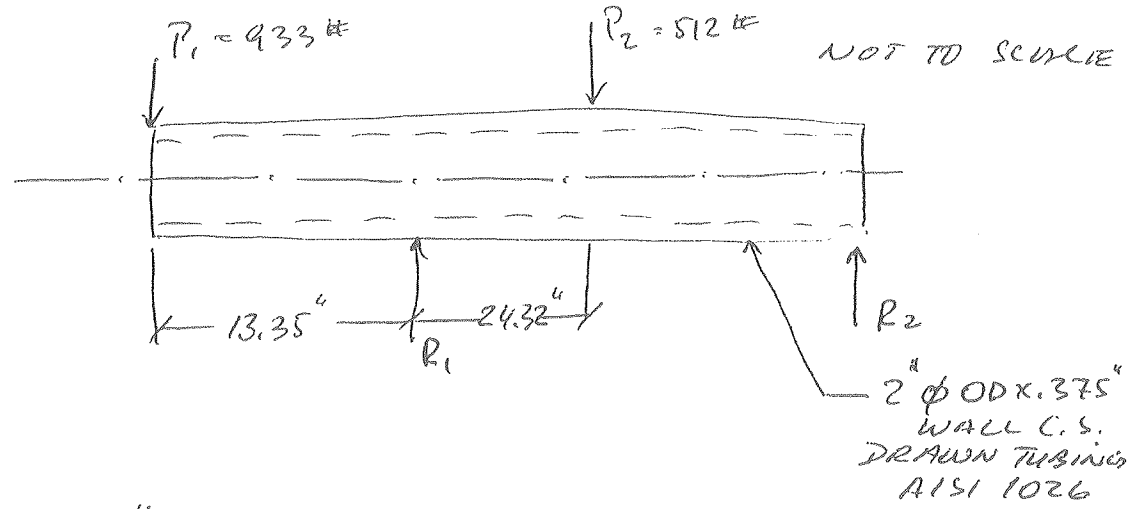

IN A "BALANCED CONDITION" THE ASSEMBLY BALANCES @ R_1 and R_2 GOES TO ZERO. ASSUMING THE DEFLECTIONS ARE SUCH THAT NO APPRECIABLE MOMENT CAPACITY IS PROVIDED. THEREFORE

$$M_{MAX} = (933^{\#})(13.35") = 12\,455 \text{ IN-LBS}$$

$$\sigma = \frac{My}{I} = \frac{(12455 \text{ IN-LBS})(\frac{1}{2}d)}{\frac{\pi}{64}(d_{OD}^4 - d_{ID}^4)} = \frac{(12455 \text{ IN-LBS})\frac{32}{\pi}(2")}{2^4 - (2-(2\times.375))^4}$$

$$= \frac{(64/\pi)(12455 \text{ in-LBS})}{13\,558 \text{ in}^4} = 18\,713 \text{ PSI OR } 18.7 \text{ KSI}$$

F_y FOR THIS MATERIAL (A 513 TYPE 5, A.K.A. AISI 1026) = 75 KSI $\quad \therefore \sigma \le \frac{F_y}{3}$ ✓

A) LATTERAL BENDING CRITERIA CHECK IS NOT APPLICABLE TO DOUBL[illegible] SYMMETRIC SECTIONS

B) 933# IS 125% OF THE [illegible]

RECTANGULAR LIFTING RAIL 1"x4"x70" LONG (66" SPAN)
6061 T6 AL BAR

FROM AL. ASSOC. PUBL. 30 THE ALLOWABLE STRESS IS 28 KSI. FOR $L < S_1$

$$S_1 = \frac{d}{t}\sqrt{\frac{L_b}{d}} = \leq 13$$

$$\frac{d}{t}\sqrt{\frac{L_b}{d}} = \frac{4}{1}\sqrt{\frac{66}{4}} = 16.2$$

SINCE $13 < S_1 < 29$ THE ALLOWABLE STRESS IS GIVEN BY: $\sigma_{MAX\ ALLOW} = 40.5 - 0.93\frac{d}{t}\sqrt{\frac{L_b}{d}}$

$$= 40.5 - 0.93(16.2) = 25.3\ KSI$$

25.3 KSI IS GREATER THAN $\frac{F_{YIELD}}{3}$ ∴ USE

$$\sigma_{MAX} = \frac{F_{YIELD}}{3}$$

2/23/95

PAGE 1

Round mechanical Tubing

Drawn over Mandrel (D.O.M) min yield 75000 PSI

max wallthickness is .375"

2" OD X .375 Wall (1.250 ID) D.O.M.

Round solid Beam fixed on one end loaded at the other (See Diagram)

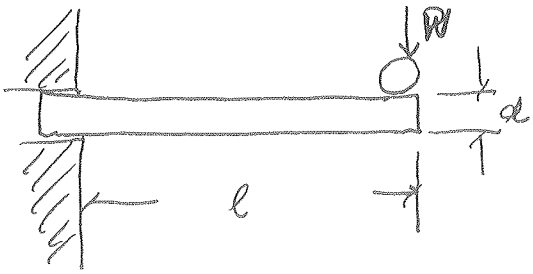

ASME B 30.20-1993
Below the Hook lifting Devices max. 33% of yield
Test Load 125% of Rated Load

Stress in extreme fiber (PSI)

$$f = \frac{10.18\, l\, W}{d^3}$$

$$= \frac{10.18 \times 46.5 \times 385}{8}$$

$$= \frac{182247.5}{8} = 22780.9 \text{ LBS/in}^2 \times 125\% = \underline{\underline{28476.2 \text{ LBS/in}^2}}$$

Assuming 75000 DOM TUBE = 75000 YIELD x .33 = $\underline{\underline{24750}}$ LBS/in²

Round mech. Tubing 2/23/95

Drawn over mandrel (D.OM) yield of 75000 PSI PAGE 2

MAX. wall thickness .375

2.0" OD x .375 WALL (1.250 ID) D.OM.)

Round Beam supported on both ends, single load at center

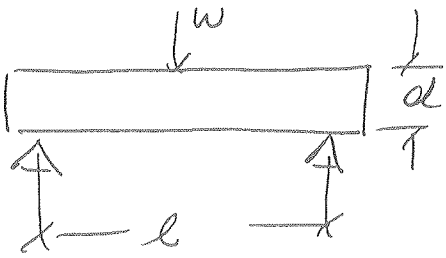

$w = 385 \text{ LBS}$

$l = \frac{46.5''}{2}$

$d = 2.0''$

Stress in extreme fibre

$$f = \frac{2.546 \times l \times w}{d^3}$$

$$= \frac{2.546 \times 23.25 \times 385}{8}$$

$$= \frac{22789.9}{8} = 2848.7 \text{ PSI} \times 125\% = \underline{\underline{3560.9}} \text{ PSI}$$

.33 OF 75000 PSI YIELD = $\underline{\underline{24750}}$ PSI

Round mech. tubing
2" OD x .375 wall
& Symmetric loading

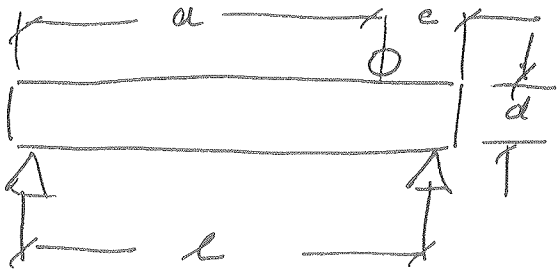

$l = 46.5''$

$a = 40.0''$

$c = 6.5''$

$d = 2.0$ DIA

$W = 385$ LBS

$$f = \frac{10.1\, W a c}{d^3 l}$$

$$= \frac{10.1 \times 385 \times 40.0 \times 6.5}{8 \times 46.5}$$

$$= \frac{1011010}{372} = 2717.8 \text{ PSI} \times 125\% = 3397.3 \text{ PSI}$$

.33% OF 75000 PSI = 24750 PSI

$$\begin{array}{r} 21.5 \\ -\ 15.5 \\ \hline 6.0 + 40.5 = 46.5'' \end{array}$$

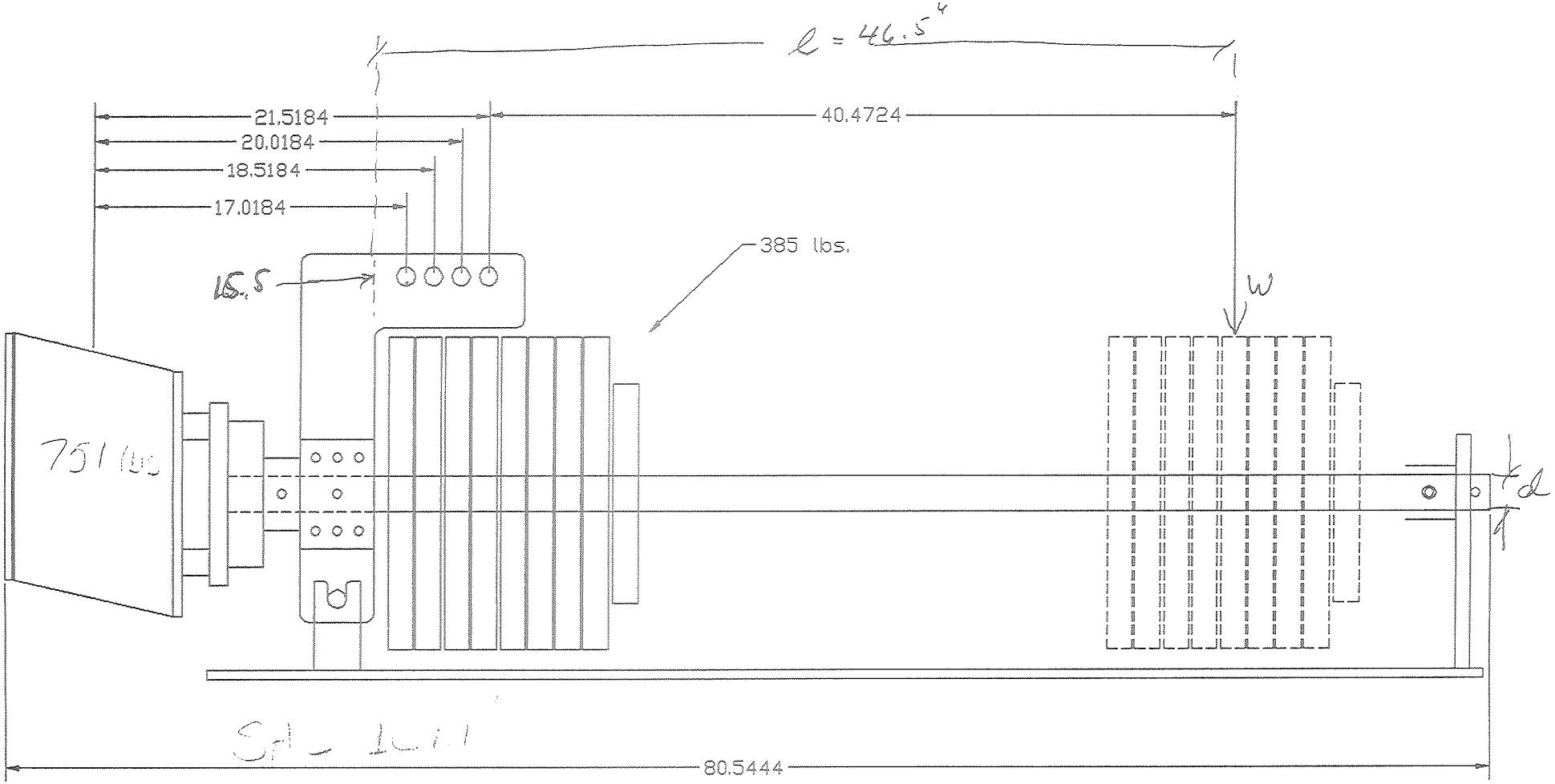

13.35
7.5
20.85

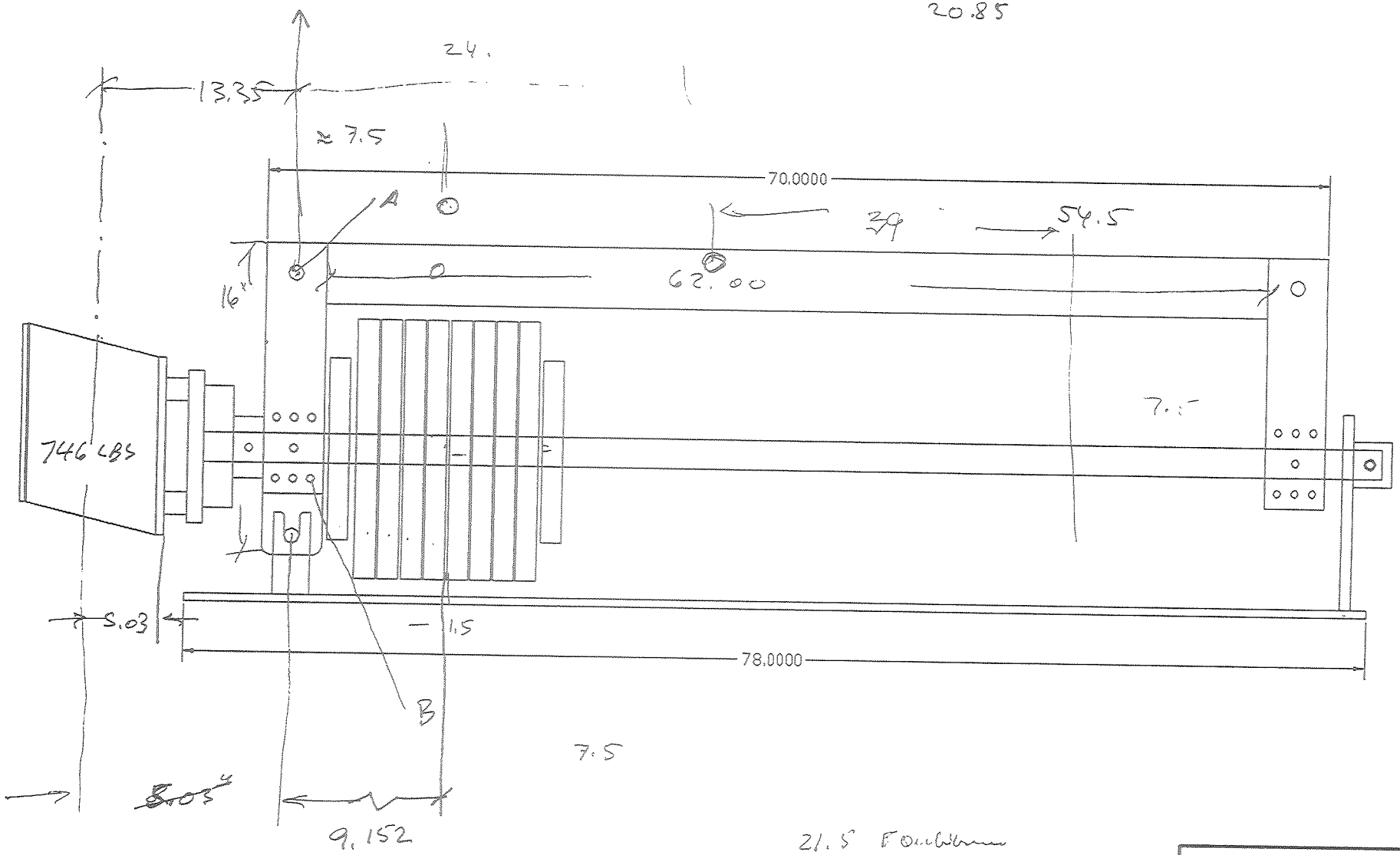

$\frac{746}{410} = 1.82$ $5.03 \times 1.82 = 9.152$

UNIVERSITY OF COLORADO	
DATE:	REV.
ERIC ERDOS (303	2-8820

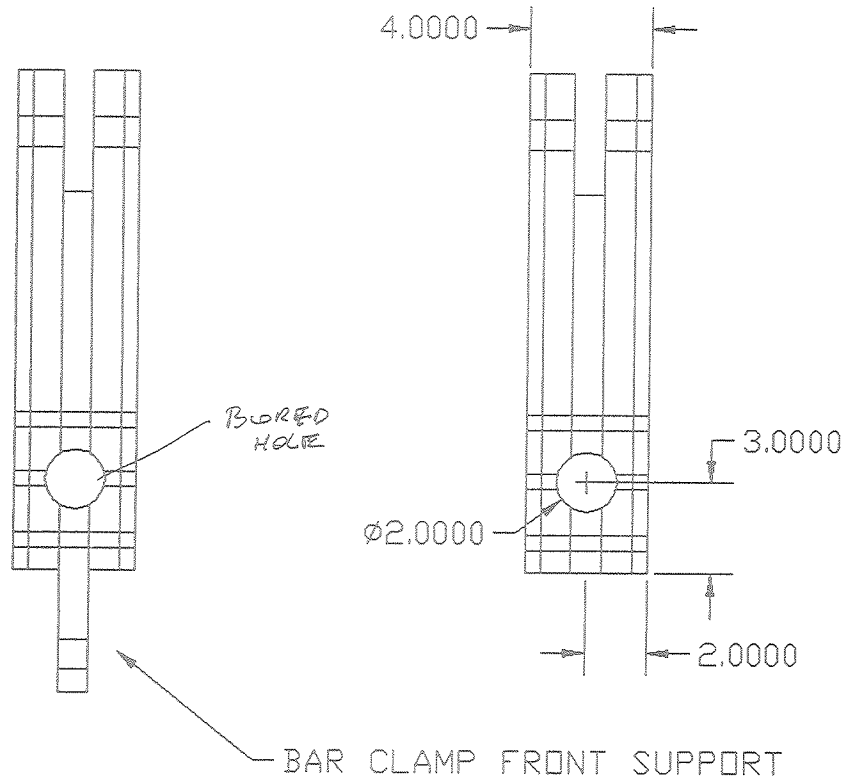

UNIVERSITY OF COLORADO	
DATE:	REV.
ASSEMBLY BAR CLAMP	
ERIC ERDOS (303) 492-8820	

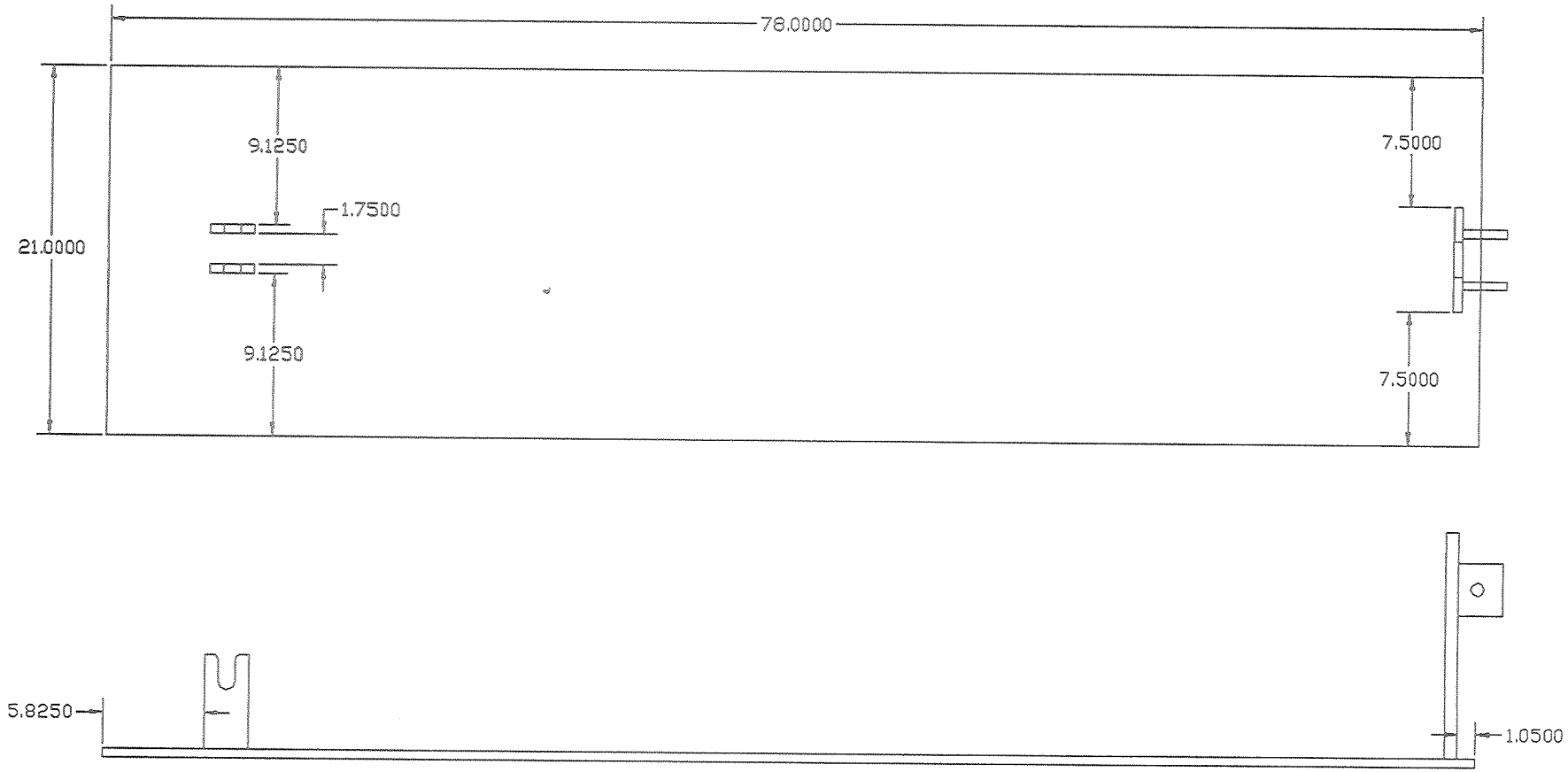

STAND
NOT PART OF LIFTING

UNIVERSITY OF COLORADO	
DATE:	REV.
base plate	
ERIC ERDOS (303 ?2-8820	

MAKE ONE PC. DOM STEEL
2" DIA. .375 WALL

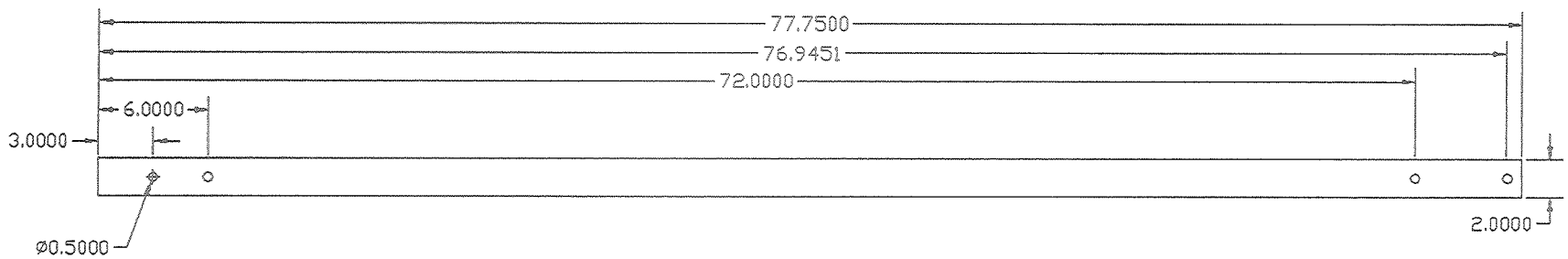

UNIVERSITY OF COLORADO	
DATE:	REV.
SUPPORT BAR	
ERIC ERDOS (303) 492-8820	

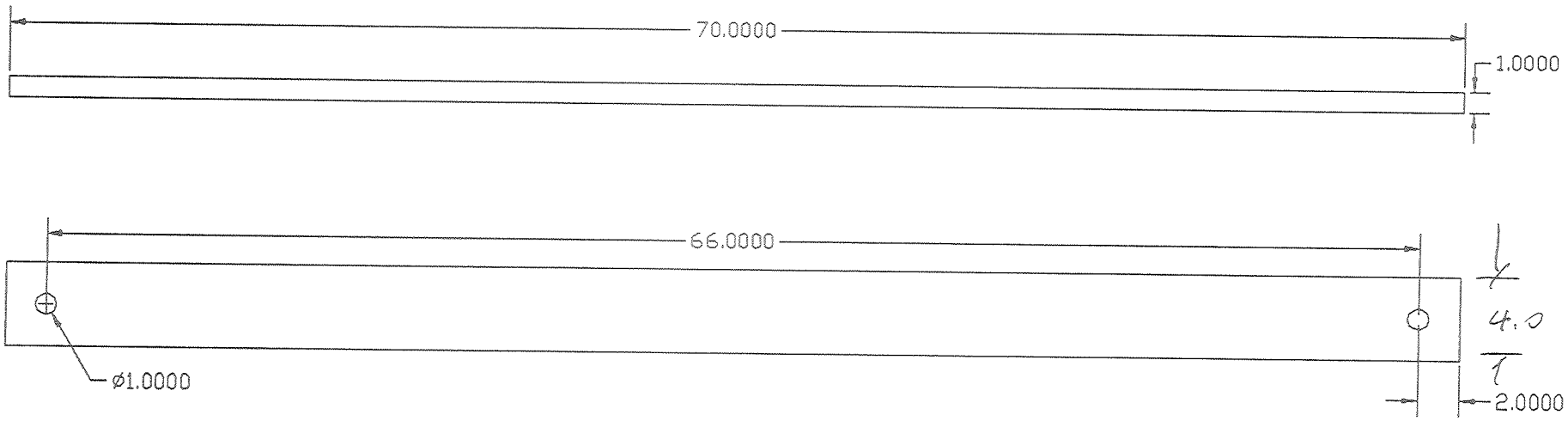

UNIVERSITY OF COLORADO	
DATE:	REV.
lifting rail	
ERIC ERDOS (303)	-8820

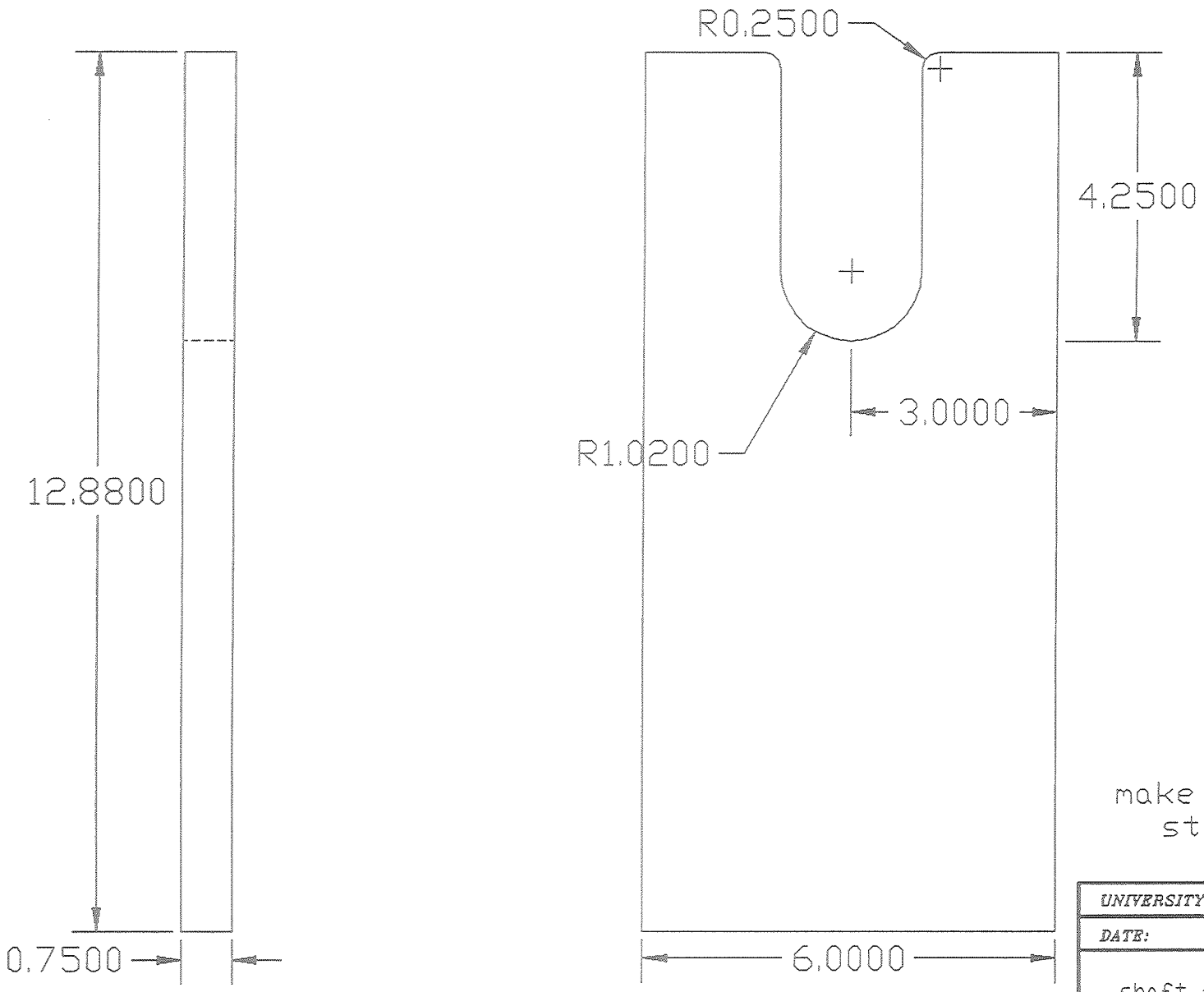

make 1 pc.
steel

UNIVERSITY OF COLORADO	
DATE:	REV.
shaft support	
ERIC ERDOS (303) 492-8820	

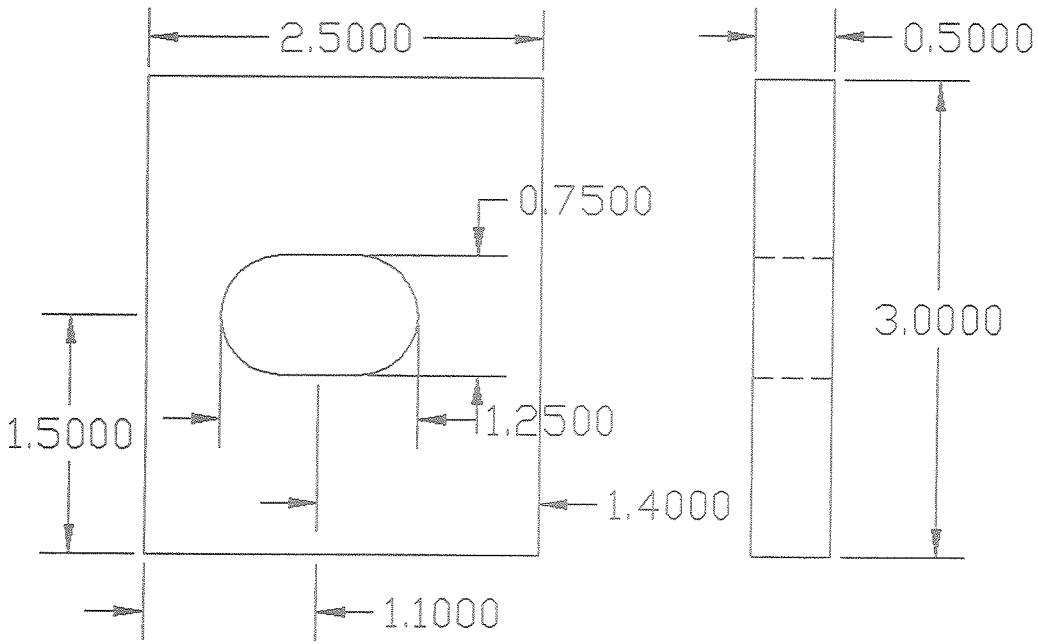

UNIVERSITY OF COLORADO	
DATE:	REV.
BAR LOCKING PLATE	
ERIC ERDOS (303) 492-8820	

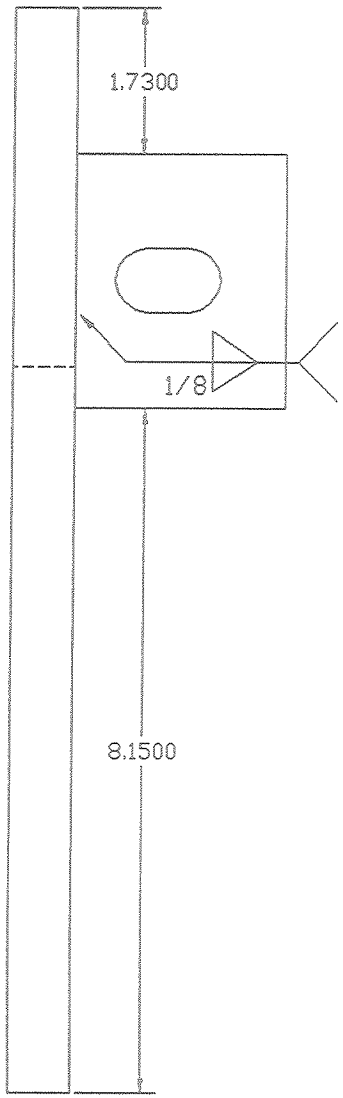

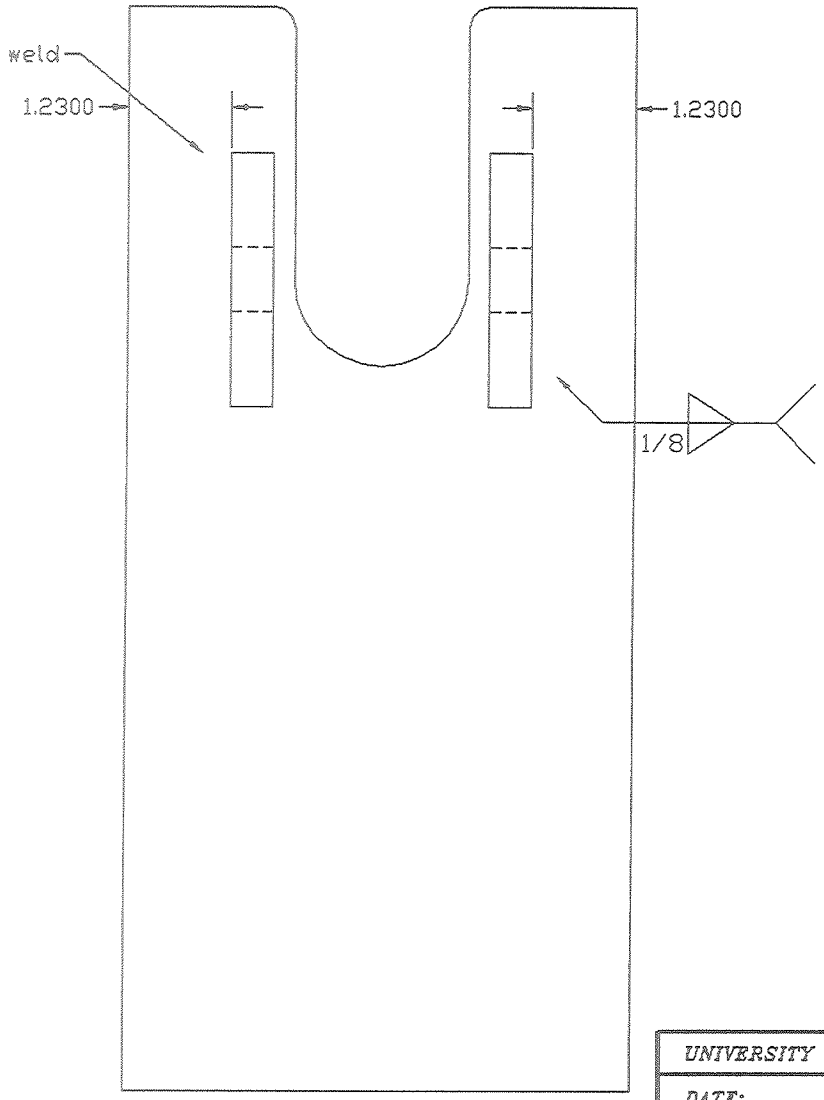

UNIVERSITY OF COLORADO	
DATE:	REV.
ASSEMBLY LOCKING PLATE	
ERIC ERDOS (303) 492-8820	

MAKE ONE PC. 1" ALUM.

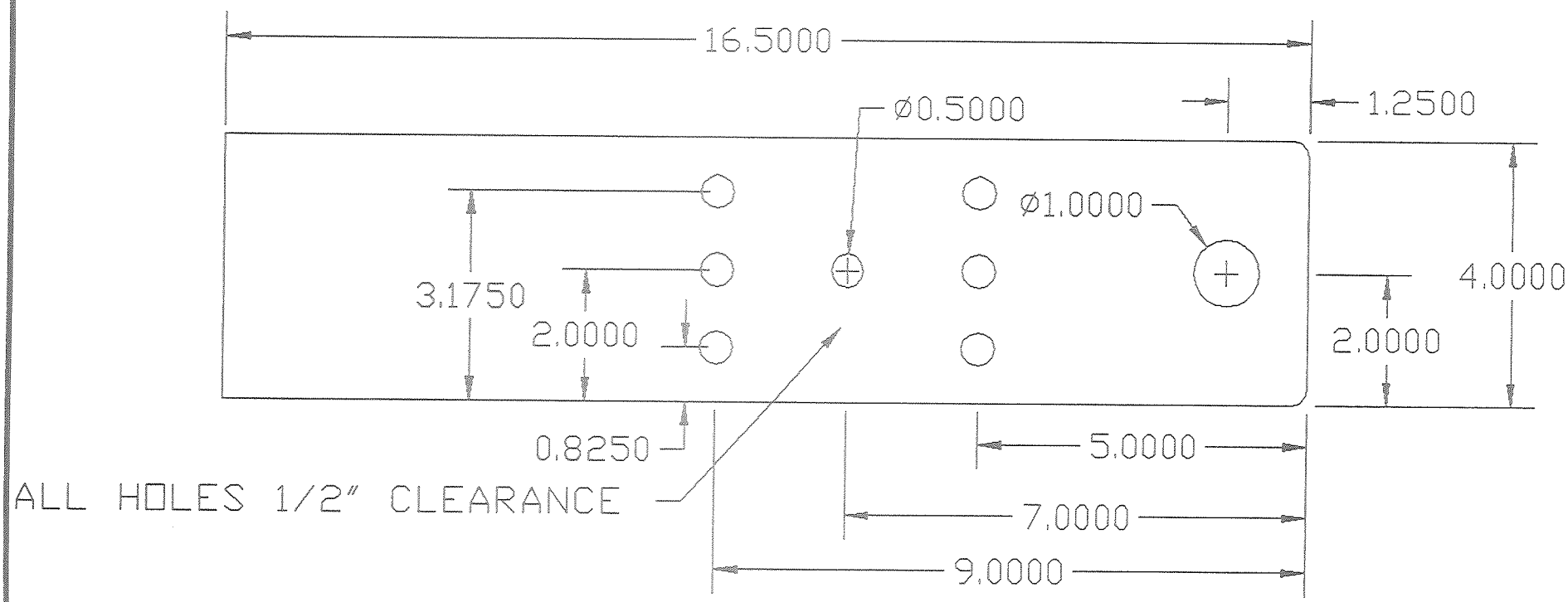

UNIVERSITY OF COLORADO	
DATE:	REV.
BAR CLAMP FRONT SUPPORT	
ERIC ERDOS (303) ?-8820	

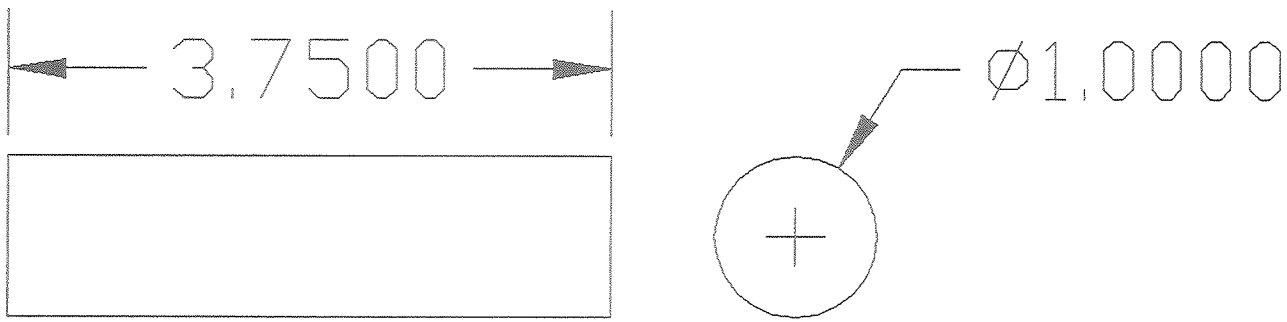

MAKE ONE PC. S.S.

UNIVERSITY OF COLORADO	
DATE:	REV.
CRATLE ROD	
ERIC ERDOS (303) 492-8820	

MAKE ONE PC. 1" ALUM.

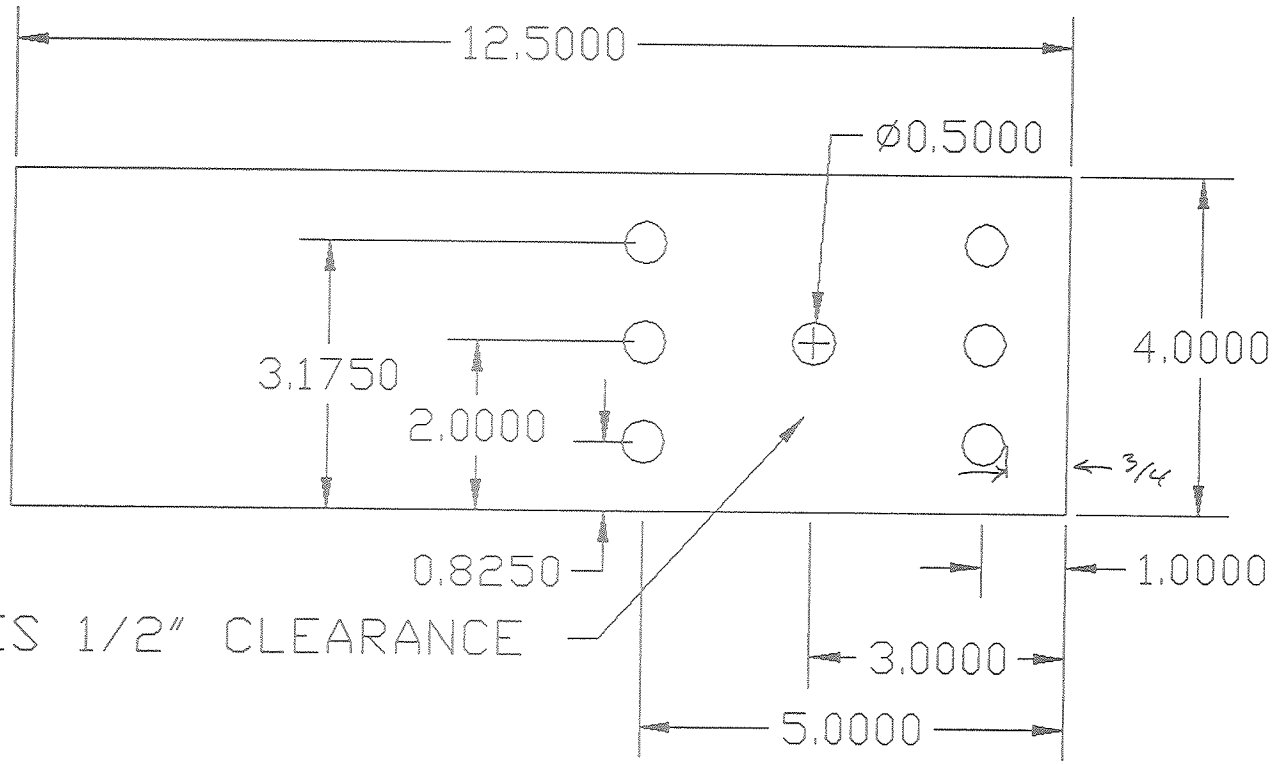

ALL HOLES 1/2" CLEARANCE

UNIVERSITY OF COLORADO	
DATE:	REV.
ERIC ERDOS (303) 492-8820	

MAKE 4 PCS. .5" ALUM PLATE
AND 4 PCS. 1" ALUM PLATE

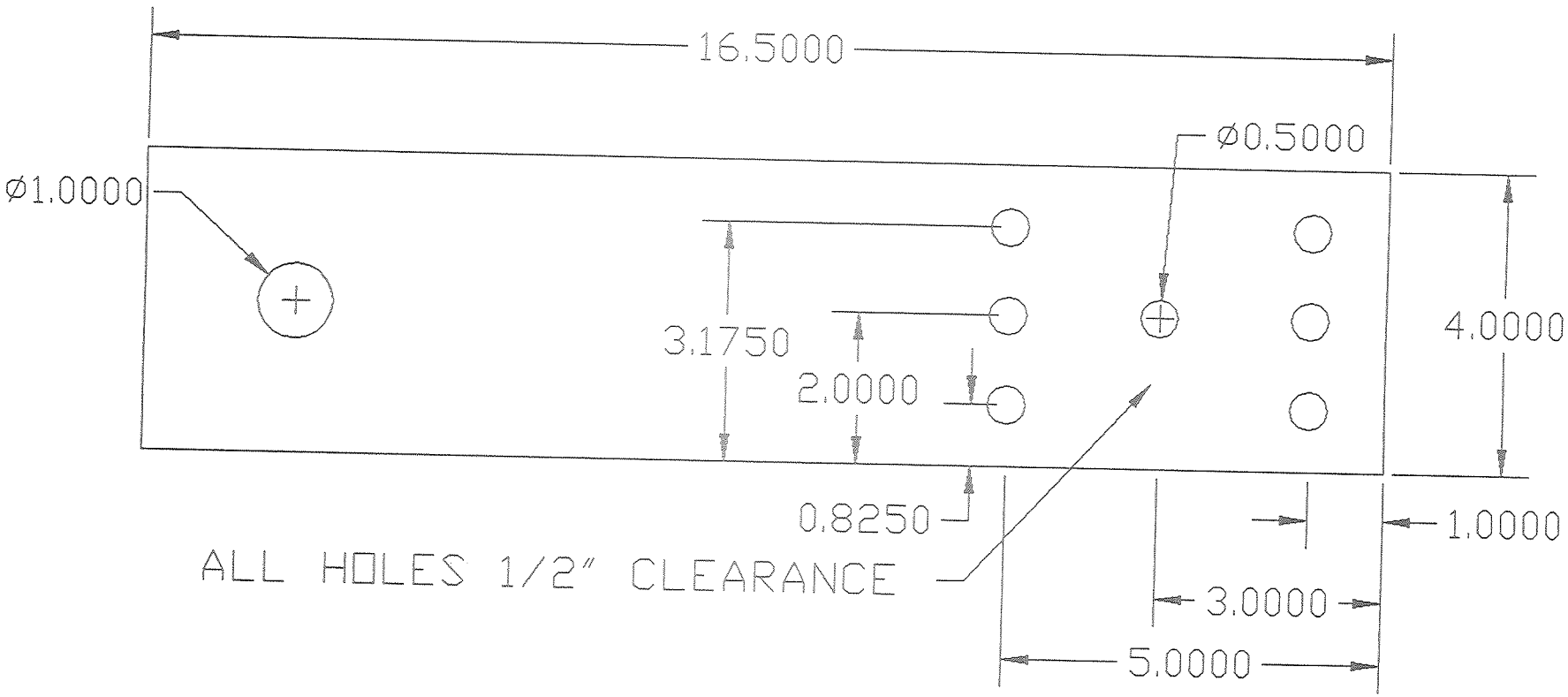

UNIVERSITY OF COLORADO	
DATE:	REV.
PIPE CLAMP PLATE	
ERIC ERDOS (303) 492-8820	

DRAWING REQUIREMENTS FOR KTeV SA LIFTING FIXTURE, USING EXISTING UNIVERSITY OF COLORADO SKETCH AS REFERENCE.

1. ASSEMBLY DRAWINGS

   A. ALL ASSEMBLY DRAWINGS REQUIRE A MINIMUM OF 2-VIEWS.
   B. INDIVIDUAL PARTS, COMPONENTS, HARDWARE, SUB-ASSEMBLIES AND WELDMENTS SHOULD BE CALLED OUT USING NUMBERED BALLOONS WITH LEADERS AND LISTED ON THE DRAWING AS A PARTS LIST.
   C. PARTS LIST SHOULD INCLUDE DESCRIPTION, DRAWING NUMBER OR VENDOR PART OR CATALOG NUMBER.
   D. ANY DIMENSIONS REQUIRED FOR ASSEMBLY SHOULD BE SHOWN ON DRAWING.
   E. NO WELDING OR MACHINING OPERATIONS SHOULD BE SHOWN ON DRAWING.

2. DETAIL DRAWINGS

   A. ANY PART OR COMPONENT THAT REQUIRES MACHINING REQUIRES AN INDIVIDUAL DETAIL DRAWING.
   B. DETAIL DRAWINGS SHOULD INCLUDE ENOUGH VIEWS, SECTIONS AND DIMENSIONS TO MACHINE OR FABRICATE THE PART.
   C. TYPE OF MATERIAL (BE SPECIFIC) SHOULD BE CALLED OUT ON DRAWING.
   D. REFERENCE SHOULD BE MADE AS TO WHERE THE DRAWING IS USED.... IS IT PART OF THE MAIN ASSEMBLY OR PERHAPS A SUB-ASSEMBLY OR WELDMENT?
   E. NO WELDING OPERATIONS SHOULD BE SHOWN ON DRAWING.

3. WELDMENT DRAWINGS

   A. CONTIGUOUS PARTS THAT REQUIRE ASSEMBLY BY WELDING OR BRAZING REQUIRE A DRAWING SHOWING THEIR RELATIONSHIP AND LOCATION TO ONE ANOTHER.
   B. USE ANSI/AWS A2.4 STANDARDS.
   C. NO MACHINING OPERATIONS SHOULD BE SHOWN ON DRAWING.
   D. A PARTS LIST IS REQUIRED.

4. SUB-ASSEMBLY DRAWINGS

   A. SUB-ASSEMBLY DRAWINGS ARE REQUIRED WHEN IT IS NECESSARY TO PRE-ASSEMBLE PARTS OR WELDMENTS TO FICILITATE ASSEMBLY OR FABRICATION.
   B. SUB-ASSEMBLY DRAWINGS CAN CONSIST OF PARTS, COMPONENTS, HARDWARE, WELDMENTS OR OTHER SUB-ASSEMBLIES.
   C. A PARTS LIST IS REQUIRED.
   D. NO MACHINING OR WELDING OPERATIONS SHOULD BE SHOWN ON DRAWING.

5. GENERAL REQUIREMENTS

   A. ALL DRAWINGS REQUIRE A DRAWING NUMBER.
   B. ALL DIMENSIONS (EXCEPT WELD SIZES) SHOULD BE SHOWN IN DECIMAL INCHES, 2-PLACES MIN./3-PLACES MAX., THE TOLERANCE BEING THE DETERMINING FACTOR.
   C. PARTS OR COMPONENTS THAT DO NOT REQUIRE MACHINING OR WELDING MAY BE CALLED OUT DESCRIPTIVELY ON ASSEMBLIES, SUB-ASSEMBLIES OR WELDMENTS. IF DIMENSIONS APPLY, BE SURE TO SHOW ENOUGH FOR FABRICATION.

BILL CYKO
DESIGNER/CHECKER
FERMILAB
MSD/DD
24 MAR 95

Bill Cyko

P.S. PLEASE DIRECT QUESTIONS TO BILL CYKO @ 708 840-4783 OR BCYKO@FNALV.

RESEARCH DIVISION
MECHANICAL SUPPORT DEPARTMENT
DESIGN AND DRAFTING GROUP
WH 11 E MS - 219

LOUIS KULA - Group Leader
(708) 840-3166 P-0476

CHUCK NILA - Deputy Leader
(708) 840-4311 P-0549

DATE: 24 Mar '95

DESIGN AND DRAFTING REQUEST
ACTIVITY SUMMARY

REQUESTOR / Division	EXT/PAGE	DESIGN & DRAFTING GROUP PROJECT NO.
DANE PUSHKA	8767	95-064
PROJECT LEADER / Division	EXT/PAGE	
G. BOCK	—	

SPECIFIC PROJECT TITLE

KTEV SA LIFTING FIXTURE

BUDGET CODE (If Applicable)	APPROVALS	DATE

DESCRIPTION OF WORK. Provide available specifications, design information, revisions, additions, and special instructions.

MARK-UP ATTACHED UNIV. OF COLORADO SKETCH TO SHOW WHAT INFORMATION NEEDS TO BE ADDED TO THE DWG. SO THAT THE DWG PROVIDES THE MIN. ACCEPTABLE FOR DOCUMENTING A LIFTING FIXTURE

SCHEDULE : START DATE 3/24/95 DATE REQUIRED 3/25/95

Assigned by / Date:	Assigned to:	Drawing Category / Series No.
C. NILA 3/24/95	B. CYKO	

JOB STATUS / REVIEW :

13.35
7.5
20.85

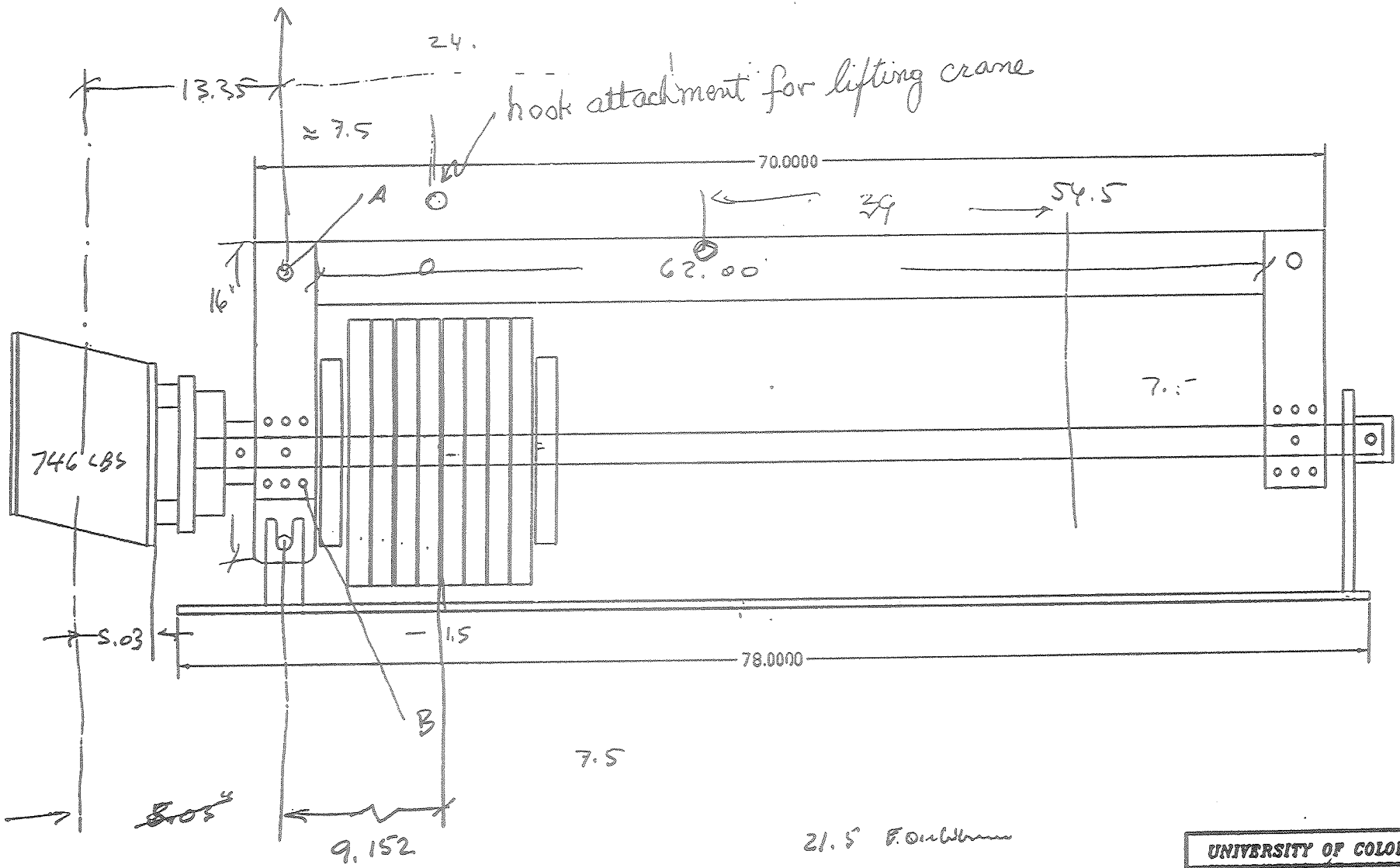

$\frac{746}{.10} = 1.82$

$5.03 \times 1.82 = 9.152$

UNIVERSITY OF COLORADO

DATE: 1/15/95 REV.