Fermilab

CDF EM LIFTING FIXTURE ENGINEERING DESIGN NOTE

Eric Haggard

TD/ENG Engineer

11-4-97

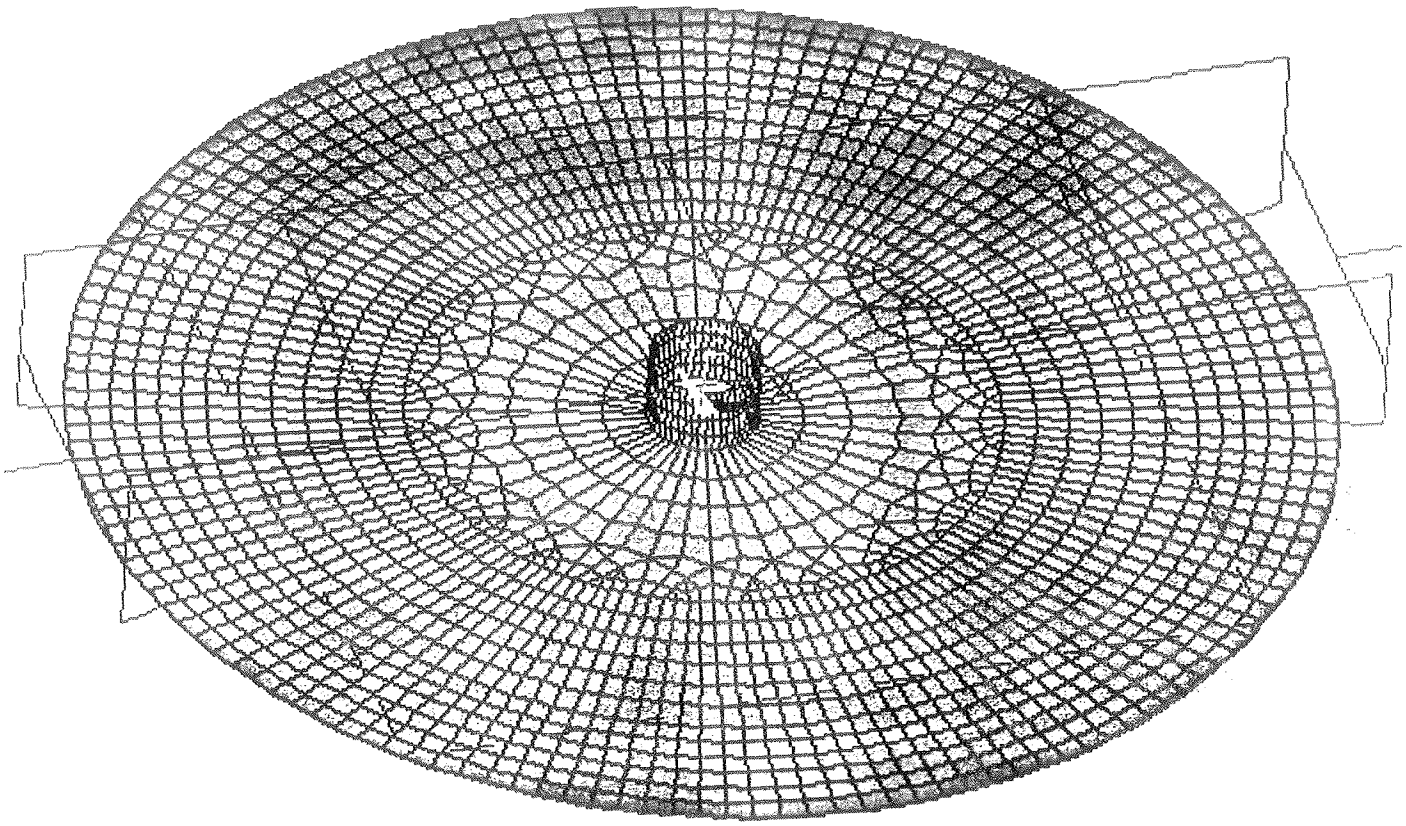

Index

Introduction and Summary

Section 1. Illustrations of the Lifting Fixture and Drawing Package

Section 2. Spreader Bar and Wire Ropes

Section 3. Lifting Fixture

Section 4. Bolted Joint Tests

Section 5. Lifting Line Loads

Section 6. Load Test

Section 7. Lifting Procedure

Section 8. Welding Specification

Section 9. Appendix: ANSYS Models

CDF EM Lifting Fixture

Eric Haggard TD/Eng&Fab 11-3-97

Revised 1/12/98 jsk

Introduction

The CDF EM Lifting fixture is a device designed to hoist and rotate the EM calorimeters into position with respect to the remainder of the plug structure. This document includes the design calculations, stress analysis, load test results, and welding procedures for this device.

Per the FNAL ES&H manual, below the hook devices are to follow ANSI B30.20, requiring that any device shall be designed with a minimum safety factor of 3 based on yield, and load tested to 125% of the design load.

The EM lifting fixture rigging drawing (2563.052-ME-332636) which follows shows the general configuration for the lift and rotation for the EM. The EM and this fixture are supported from spreader bar PPD#10, rated at 22 tons. The main load is transmitted through wire rope, of diameter 1.125", rated at 10 tons each. Rotation is achieved using 4 chains, each rated at 1.5 tons minimum. And the fixture itself transmits the loads from the main pivots to bolted friction joints, which connect the fixture to the EM.

Stress Analysis Summary

Spreader Bar

The spreader bar is an existing PPD spreader rated at 22 tons. Our design load is 15 tons. The weight of the EM calorimeters fully loaded is 13 tons, and the EM lifting fixture weighs 1.4 tons.

Main Load Ropes

The custom slings were ordered from John Sakash (Chicago, IL), as 1.125" diameter wire rope load tested to 125% of 7.5 tons lbs before delivery. From their catalog, their standard rating for wire rope of this diameter is 10 tons.

Rotation Lines

Rotation chains and associated hardware are specified to have a minimum rating of 1.5 tons. The maximum load expected across all 4 of the lines, summed, is less than 1 ton. The come alongs and hoist rings are standard industrial items.

Lifting Fixture

The stresses found through ANSYS calculation and hand calculation show that the stresses in the lifting fixture box beam never exceed 4010 psi, in any orientation.

The maximum stress in the pivot is 5806psi, assuming the lift line slides out to the maximum extent possible. The maximum stress in any weld around the pivot is 7389 psi. These values are the highest in the fixture at any rotation or

position, and are calculated for the worst possible position of the wire rope on the pivot.

The maximum load transmitted through any one of the fixture to EM bolt joints occurs at a rotation of 45 degrees and is 11,500 lbs in shear. Preload at each joint is provided by 3 bolts, with a minimum yield stress of 200ksi. Models of this joint were tested in the Instron at the Materials Development Lab, and the average slip strength of the fastened joint (for 1 bolt) is 14,700 lbs. Note this is not the ultimate failure point of the joint, which instead is typically above 20,000 lbs.

Detailed notes on each of the above follows.

Section 1. Illustrations of the Lifting Fixture

And Drawing Package

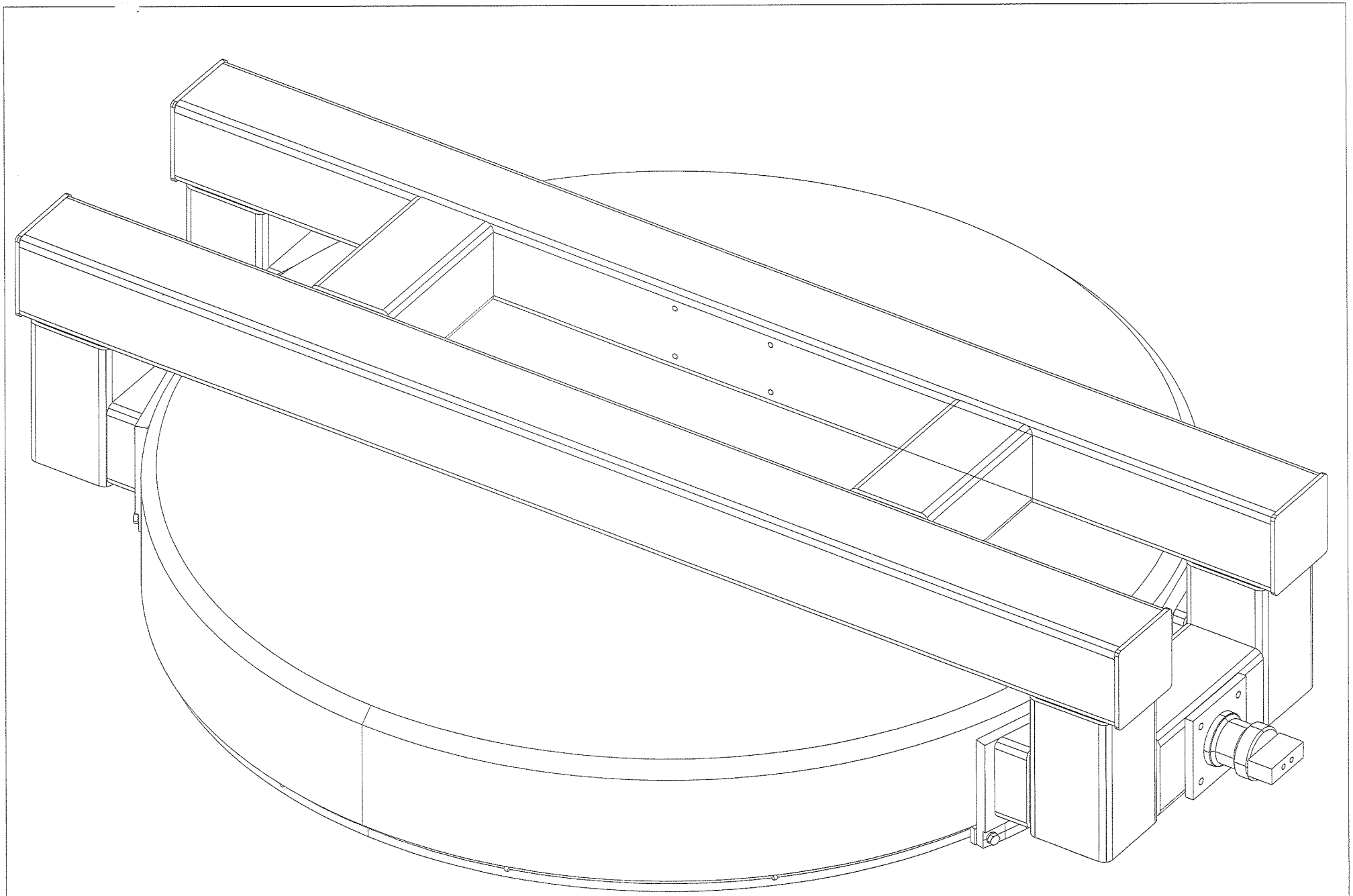

EM DETECTOR & LIFTING FIXTURE IN THE HORIZONTAL POSITION

Plotted by simmie on 20-Jan-98

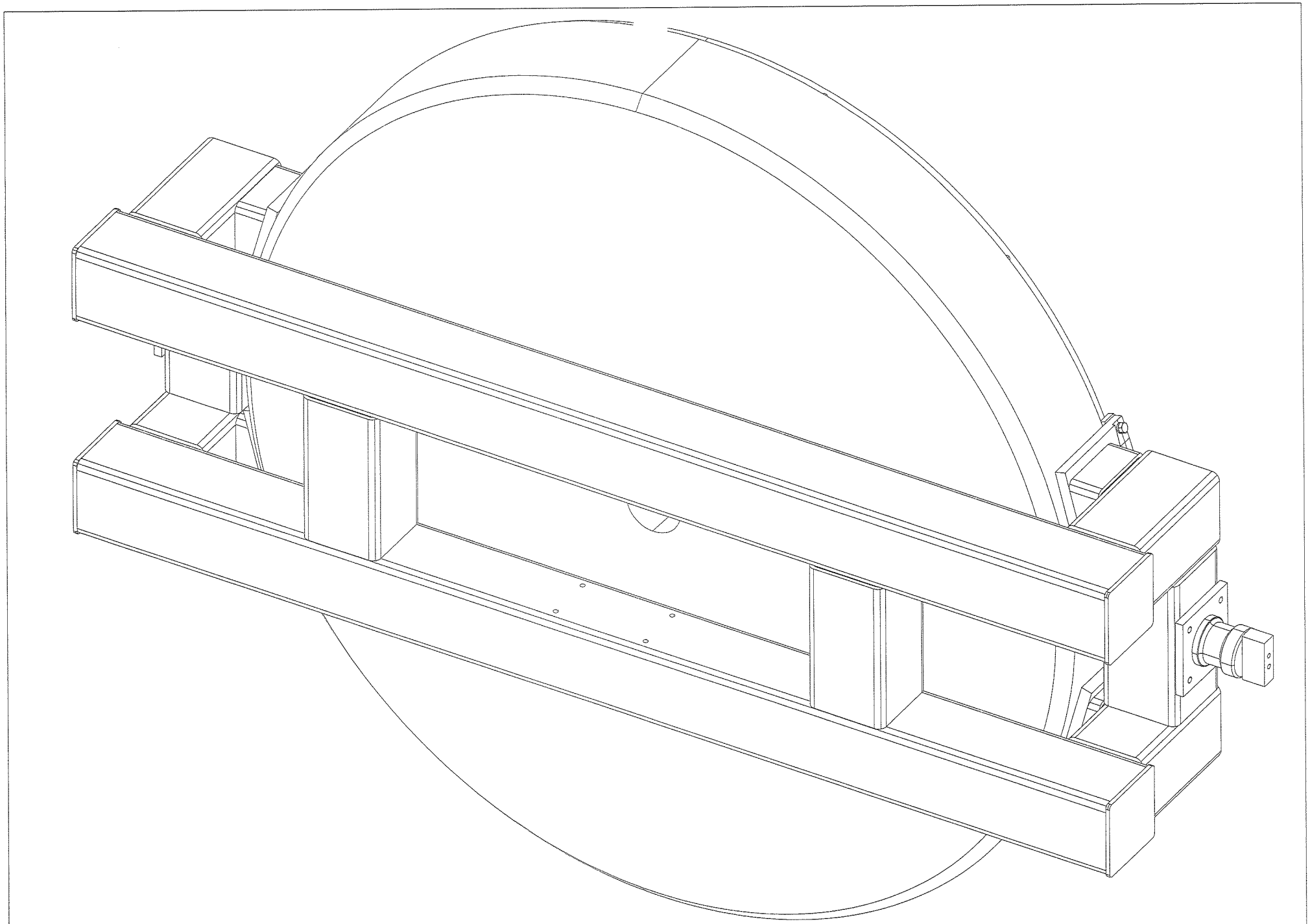

EM DETECTOR & LIFTING FIXTURE IN VERTICAL POSITION

Plotted by simmie on 20-Jan-98

REV	DESCRIPTION	DRAWN APPR	DATE APPR
	E.R #5194		
A	REMOVED COME-ALONG ASSY., OPT. SAFTY-LINE, PIVOT-ARM, COUNTER-BALANCE LOAD & REVISED LIFTING POINTS	S.L.M.	01-11-97

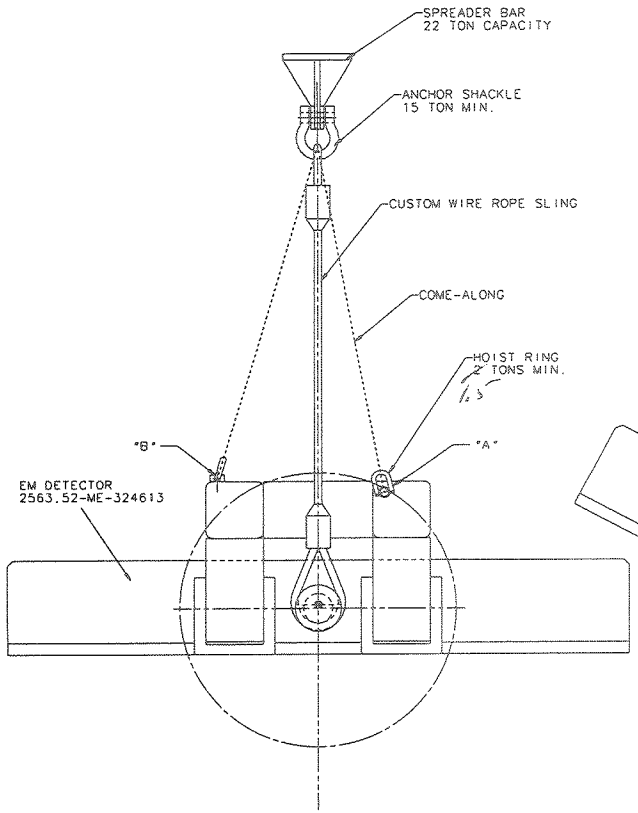

RIGGED FOR HORIZONTAL TRANSPORT

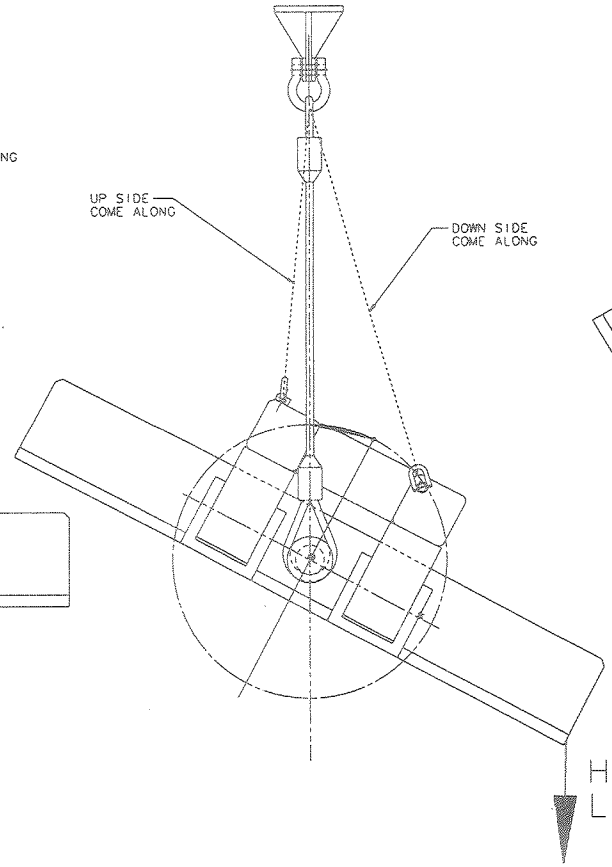

GETTING THE EM ROLLING

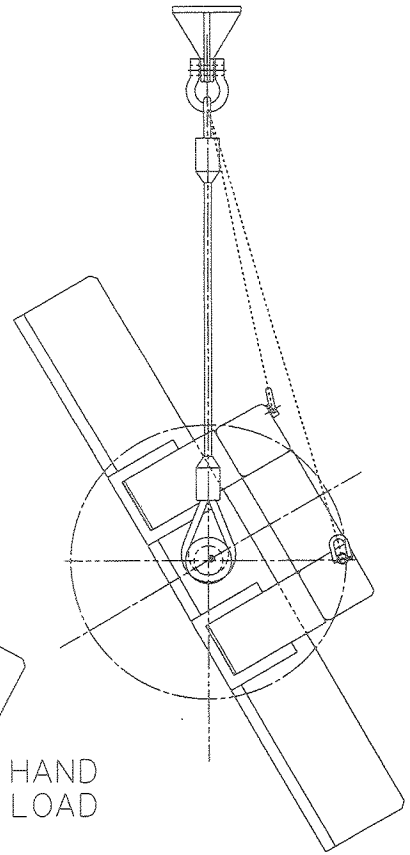

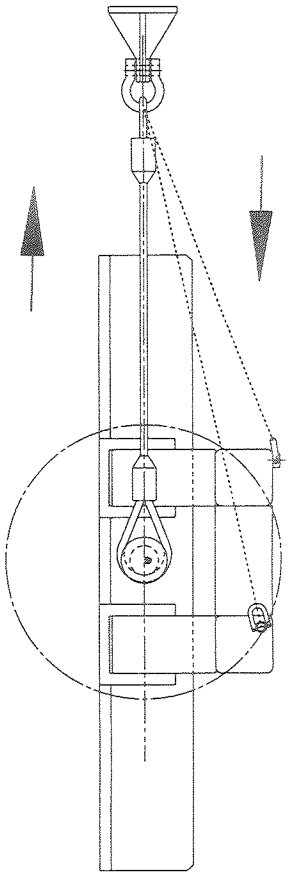

THE EM IN FINAL
VERTICAL POSITION

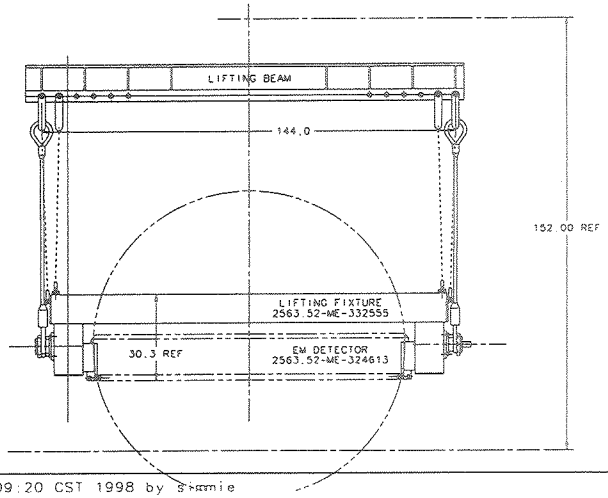

ITEM	PART NO	DESCRIPTION OR SIZE	QTY
	PARTS LIST		

UNLESS OTHERWISE SPECIFIED	ORIGINATOR	C. HAGGARD	10-97
.XX .XXX ANGLES	DRAWN	C. HAGGARD	10-97
	CHECKED	C. HAGGARD	10-97
1. BREAK ALL SHARP EDGES .02 MAX.	APPROVED	C. HAGGARD	10-97
2. DO NOT SCALE DRAWING	USED ON		
3. DIMENSIONS APPLY AFTER HEAT TREATMENT			
4. RMS ALL MACH SURFACES	MATERIAL		

FERMI NATIONAL ACCELERATOR LABORATORY
UNITED STATES DEPARTMENT OF ENERGY

COLLIDER DETECTOR FACILITY
END PLUG EM LIFTING FIXTURE
RIGGING CONCEPTUAL DRAWING

SCALE	FINISH	DRAWING NUMBER	REV
1/8		2563.052-ME-332636	A

CREATED WITH I-DEAS MS1 3b USER NAME: HAGGARD

Plotted Thu Jan 22 09:09:20 CST 1998 by Sammie

REV	DESCRIPTION	DRAWN APPD	DATE DATE
A	REVISED DWG TO REFLECT ITEM NO.1 MODIFICATIONS, ADDED ITEM NO.10	S.L.M. / L. HAGGARD	7-17-97 / 7-17-97
B	REVISED DWG TO REFLECT ITEM NO 1 MODIFICATIONS.	S.L.M.	10-31-97
C	REVISED DWG TO REFLECT ITEM NO.1 MODIFICATIONS, ADDED ITEM NO.11 ECO NO. XXXX	S.L.M.	11-12-97

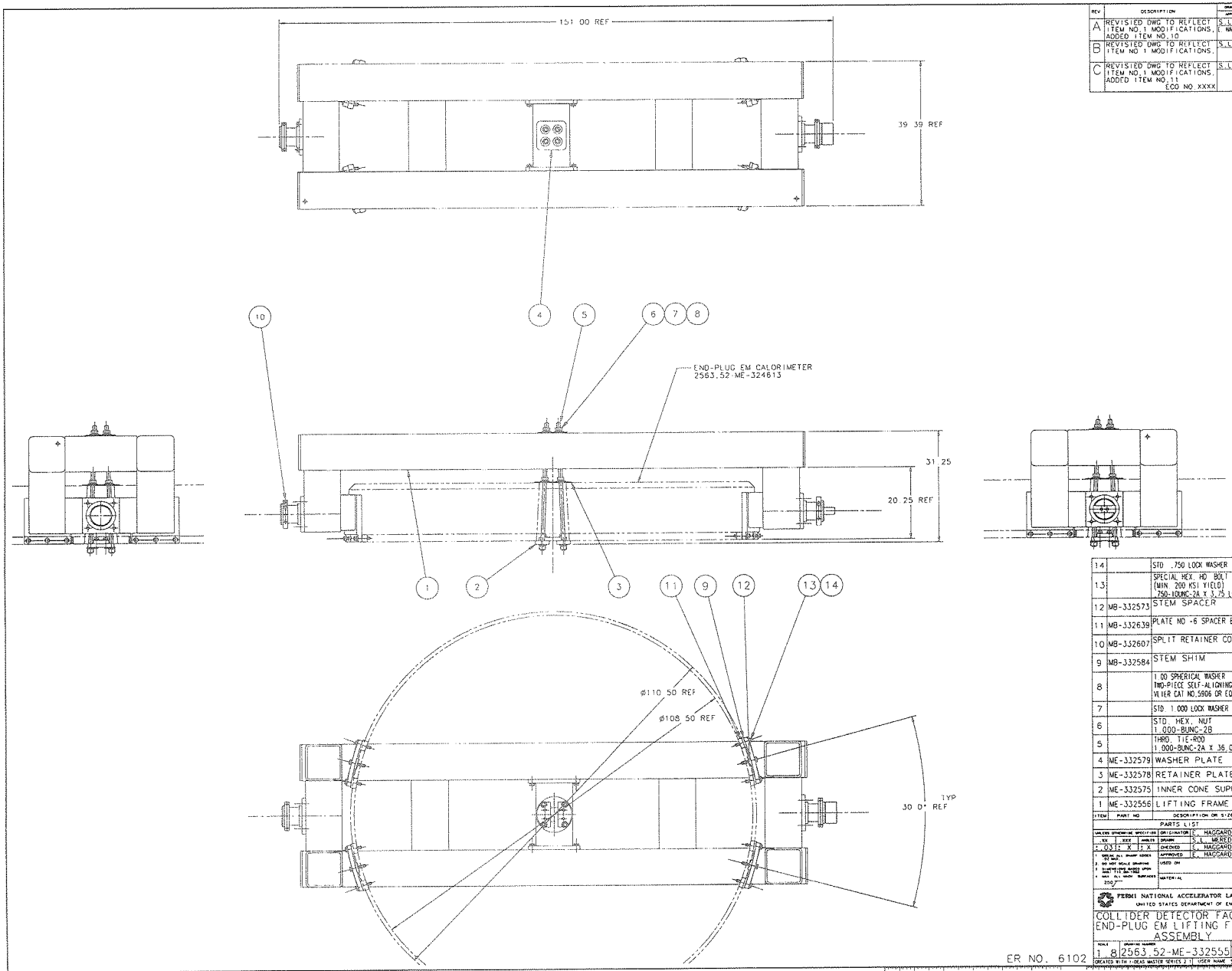

ITEM	PART NO	DESCRIPTION OR SIZE	QTY
14		STD .750 LOCK WASHER STL	12
13		SPECIAL HEX. HD BOLT STL (MIN. 200 KSI YIELD) .750-10UNC-2A X 3.75 LG.	12
12	MB-332573	STEM SPACER	4
11	MB-332639	PLATE NO -6 SPACER BLOCK	8
10	MB-332607	SPLIT RETAINER COLLAR	2
9	MB-332584	STEM SHIM	AS REQ.
8		1.00 SPHERICAL WASHER STL TWO-PIECE SELF-ALIGNING VELIER CAT NO.5906 OR EQ.	12
7		STD 1.000 LOCK WASHER STL	12
6		STD. HEX. NUT STL 1.000-8UNC-2B	12
5		THRD. TIE-ROD STL 1.000-8UNC-2A X 36.00 LG.	4
4	ME-332579	WASHER PLATE	1
3	ME-332578	RETAINER PLATE	1
2	ME-332575	INNER CONE SUPPORT	1
1	ME-332556	LIFTING FRAME	1

PARTS LIST

UNLESS OTHERWISE SPECIFIED	ORIGINATOR	E. HAGGARD	4-17-97
DIM / XXX / ANGLE	DRAWN	S.L.M. MODIFIED TH	4-17-97
±.031 X ±.X	CHECKED	E. HAGGARD	6-13-97
1. DEBURR ALL SHARP EDGES .01 MAX	APPROVED	E. HAGGARD	8-97
2. DO NOT SCALE DRAWING	USED ON		
3. DIMENSIONS APPLY AFTER PLATING			
4. ONLY ALL MACH SURFACES 250	MATERIAL		

FERMI NATIONAL ACCELERATOR LABORATORY
UNITED STATES DEPARTMENT OF ENERGY

COLLIDER DETECTOR FACILITY
END-PLUG EM LIFTING FIXTURE
ASSEMBLY

SCALE 1 8 | DRAWING NUMBER 2563.52-ME-332555 | SHEET 1 OF 1 | REV C

CREATED WITH I-DEAS MASTER SERIES 2 || USER NAME: S.LABELLE

ER NO. 6102

Plotted Tue Jan 20 15 24 17 CST 1998 by simmie

REV.	DESCRIPTION	DRAWN / APPR	DATE / DATE
A	MODIFIED ITEM NO. 1 & QTYS. OF ITEMS NO. 6, 7, 8 & 9 Ø110.01 WAS 110.05	S. L. M. / E. HAGGARD	7-16-97 / 7-16-97
B	ADDED WELD SPEC AND NOTE & ITEM NO. 4 WAS MD-332627 ECO NO. XXXX	E. HAGGARD	10-28-97
C	DELETED ITEM NO. 4 (MD-332627) ITEM NO. 6 (MD-332573) & ITEMS NO. 7, 8 & 9 111.55 REF WAS 110.01 + .03/-0	S. L. M.	01-12-98

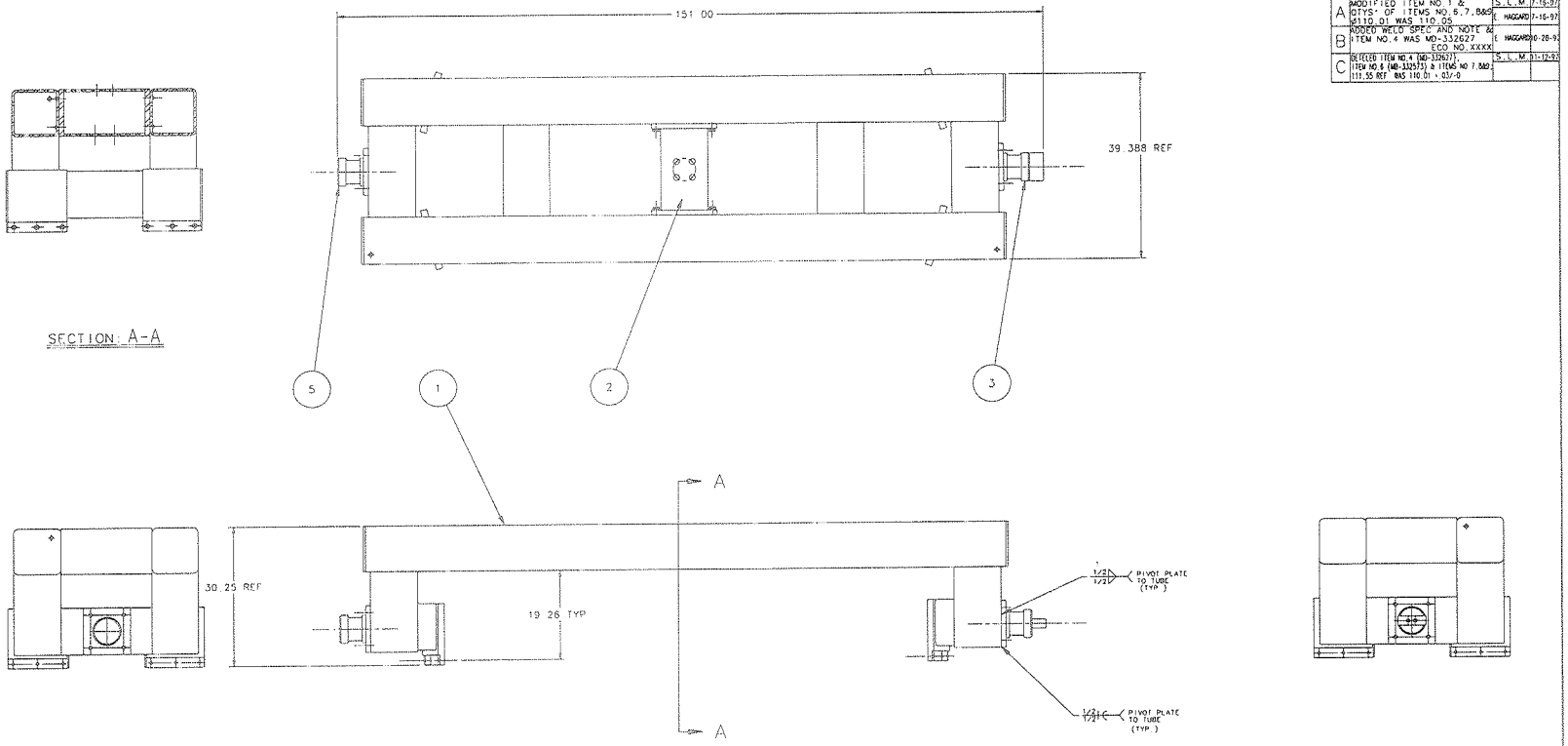

NOTE:

ALL WELDING SHALL BE DONE ACCORDING TO FERMILAB PROCEDURE NUMBER 2563.52-SA-332608

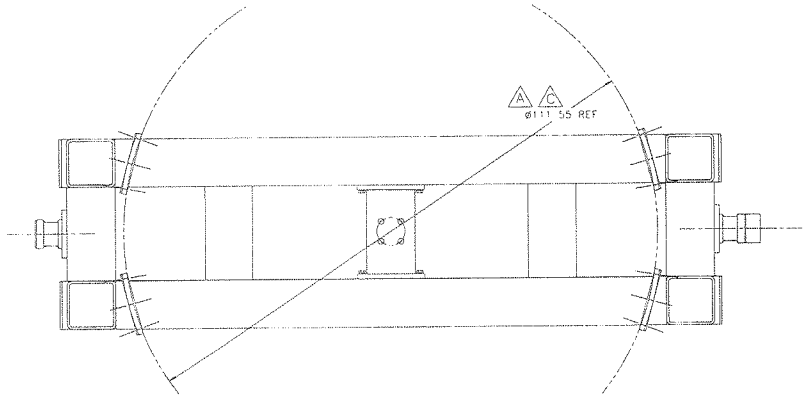

ITEM	PART NO.	DESCRIPTION OR SIZE	QTY.
5	MC-332567	STEM PIVOT	1
C 4			
3	MC-332570	LEVER STEM PIVOT	1
2	MC-332564	CENTER POST CROSS-BRACE	1
1	ME-332557	LIFTING FRAME WELDMENT	1

PARTS LIST

UNLESS OTHERWISE SPECIFIED			DESIGNATOR	E. HAGGARD	4-15-97
.XX	.XXX	ANGLES	DRAWN	S. L. MERRITT	4-15-97
± .031	X ± X		CHECKED	E. HAGGARD	8-97
1. BREAK ALL SHARP EDGES .010 MAX.			APPROVED	E. HAGGARD	8-97
2. DO NOT SCALE DRAWING.			USED ON	ME-332555	
3. DIMENSIONS BASED UPON MEL FIX DATUMS					
4. MAX. WELD SHRINKAGE .250"			MATERIAL		

FERMI NATIONAL ACCELERATOR LABORATORY
UNITED STATES DEPARTMENT OF ENERGY

COLLIDER DETECTOR FACILITY
END-PLUG EM LIFTING FIXTURE
LIFTING FRAME

SCALE	DRAWING NUMBER	SHEET	REV
1:8	2563.52-ME-332556	1 OF 1	C

ER NO. 6102

CREATED WITH UGS MASTER SERIES 2.1 USER NAME: SLMARTELLE

Plotted Tue Jan 20 15:15:04 CST 1998 by simmic

Section 2. Spreader Bar and Main Rope

Summary

The spreader bar used is existing PPD Spreader bar #10, rated at 22 tons.

The wire rope is 1.125" diameter, procured from John Sakash Co. of Chicago.

From their catalog, each is rated at 10 tons

JEH

10-24-97

PHOTOS OF SPREADER BAR

7-23-97

TO: JOHN ROACH @ JOHN SAKASH @.

FROM: ERIC HAGGARD
630-840-4002

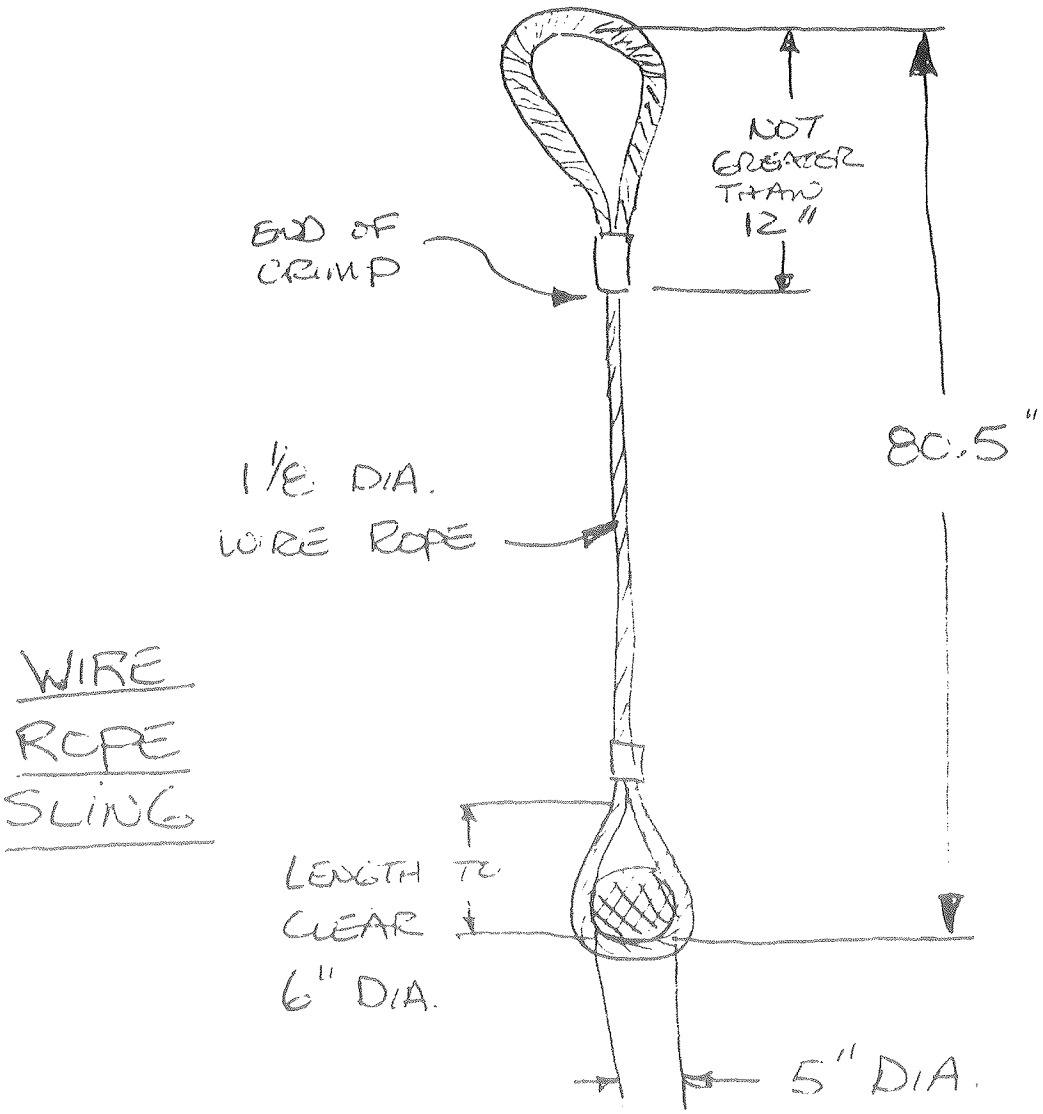

I NEED TWO SLINGS WHICH ARE IDENTICAL IN LENGTH (+/- 1/8"), DESIGN LOAD IS 15,000# EACH, LOAD TESTED TO 125% OF DESIGN LOAD BEFORE DELIVERY TO FERMILAB. PLEASE PROVIDE QUOTE FOR COST & DELIVERY.

WIRE ROPE SLINGS

John Sikosh Co.

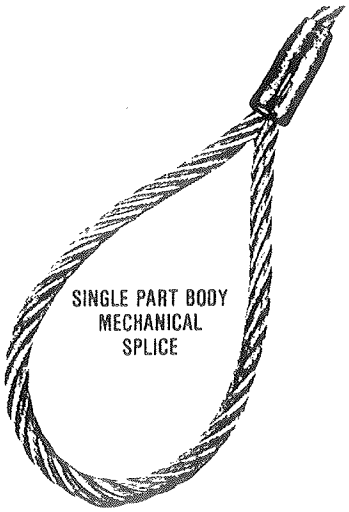

Single Part, Mechanical Splice Slings. . . IWRC . . . IPS

Eyes are formed using the flemish eye splice. Ends are secured by pressing a metal sleeve, either steel or aluminum, over the ends of the strands of the splice. Pull is directly along the centerline of rope and eye. Gives most efficient use of rope capacity, is economical.

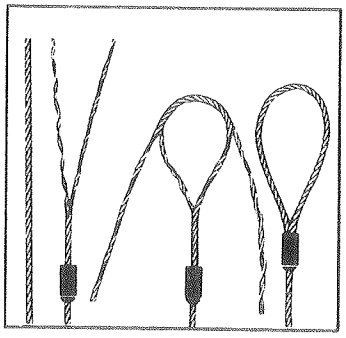

Flemish Eye Splice

In the standard flemish eye mechanical splice, rope is separated into two parts — 3 adjacent strands, and 3 adjacent strands and core. These two parts are then re-laid back in opposite directions to form an eye, and ends are secured with a pressed metal sleeve.

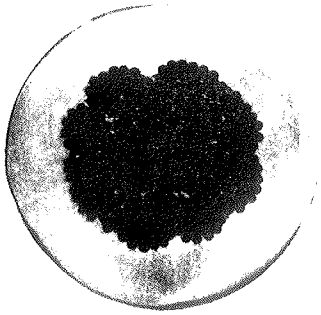

Swaging Provides Postive Grip

This cutaway of a metal sleeve swaged onto a splice shows how metal "flows" into valleys between strands to positively prevent ends from unlaying when sling is used within its rated capacity.

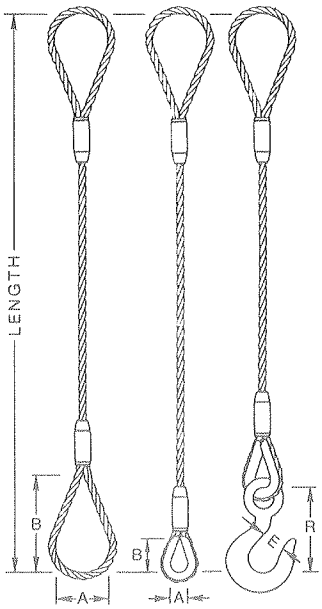

The chart below lists the capacities and sizes of the most common slings. We welcome the opportunity to quote your special requirements. Latch Hook Kits are available.

Rope Size (in.)	Eye Size (in.) W	Eye Size (in.) L	Recommended Minimum Length	Rated Capacity (tons 2000 lbs.) * Straight Pull	Choker Hitch **	Basket Hitch Vertical	60°	45°	30°
1/4	3	6	1' 6"	.56	.42	1.1	.97	.79	.56
5/16	3	6	1' 10"	.87	.65	1.7	1.5	1.2	.87
3/8	3	6	1' 10"	1.2	.93	2.5	2.2	1.8	1.2
7/16	4	8	2' 4"	1.7	1.3	3.4	2.9	2.4	1.7
1/2	4	8	2' 6"	2.2	1.6	4.4	3.8	3.1	2.2
9/16	4	8	2' 8"	2.8	2.1	5.5	4.8	3.9	2.8
5/8	5	10	3' 2"	3.4	2.6	6.8	5.9	4.8	3.4
3/4	6	12	3' 8"	4.9	3.6	9.7	8.4	6.9	4.9
7/8	7	14	4' 4"	6.6	4.9	13.0	11.0	9.3	6.6
1	8	16	4' 10"	8.5	6.4	17.0	15.0	12.0	8.5
1 1/8	9	18	5' 6"	10.0	7.8	21.0	18.0	15.0	10.0
1 1/4	10	20	6' 2"	13.0	9.6	26.0	22.0	18.0	13.0
1 3/8	11	22	6' 10"	15.0	12.0	31.0	27.0	22.0	15.0
1 1/2	12	24	7' 4"	18.0	14.0	37.0	32.0	26.0	18.0
1 3/4	14	28	8' 6"	25.0	18.0	49.0	43.0	35.0	25.0
2	16	32	9' 10"	32.0	24.0	64.0	55.0	45.0	32.0

* RATED CAPACITIES BASKET HITCH BASED ON D/d RATIO OF 25

RATED CAPACITIES BASED ON PIN DIAMETER NO LARGER THAN NATURAL EYE WIDTH OR LESS THAN THE NOMINAL SLING DIAMETER

RATED CAPACITIES BASED ON DESIGN FACTOR OF 5

HORIZONTAL SLING ANGLES LESS THAN 30 DEGREES SHALL NOT BE USED

**When angle of choke (<AC) is less than 135° capacity is reduced

Rated Capacities shown apply only to 6x19 and 6x37 classification wire rope.

Section 3. Lifting Fixture

Summary

This section describes the model and results from the model and analytical calculations for the lifting fixture. The maximum stresses in the box beam is shown to be on the order of 4010psi, and in the pivot 5806 psi. The maximum stress in the pivot attachment weld is calculated to be 7389 psi. The maximum load through one of the four fixture to EM connections is seen to be 11,500lb shear (with the tensile load being much less than the preload on the joint).

EM LIFTING FIXTURE STRESS ANALYSIS

The EM Lifting Fixture was analyzed for stress conditions to comply with ANSI/ASME Standard B30.20 for Below-The-Hook Lifting Devices. The code requires that the general construction of the lifting device "shall be designed to withstand the forces imposed by its rated load , with a minimum design factor of 3, based on yield strength, for load bearing structural components". The EM lifting fixture design load is 30,000 lb. to be applied at several bolt locations on the perimeter of the fixture and through the center cone of the EM Detector.

The Lifting Fixture will be used to pick up the EM detector from the floor in the horizontal position, rotate the detector through 90 degrees and then hold the detector while it is mounted to the CDF End Plug in the detector hall at CDF. The stress analysis of the framework weldment started using ANSYS Finite Element Analysis and backed by hand calculations. The original model included three load cases, one in which the EM is horizontal, with support to the lifting fixture at the center, one with the EM horizontal supported only at the 4 bolt joints around the perimeter, and one with the EM in the vertical position and supported at the 4 bolt joints around the perimeter. In addition, the model was rotated in 15 degree increments to understand the bolt joint loads as a function of angle.

The final model uses Shell63 elements to model the EM Detector -6 plate and center cone and Beam4 elements to model the structural tubing of the lifting fixture. The loading is applied by adding density to certain shell elements which apply the correct forces and moments to the EM -6 plate and the structural tubing. The load is varied by a gravity vector which simulates a rotation of 90 degrees in 15 degree increments.

The critical portions of the design are the stresses in the box beam itself, the design of the pivot, and understanding the bolted joint mechanics. Within the box beam, ANSYS calculated stresses are around 4010psi maximum. This is corroborated by a boundary value had calculation which has the EM supported only at the center attachment to the lifting fixture, while the load to the spreader bar are transmitted through the pivots.

The pivot design is a modification of the previously existing one, and is straightforward, with a safety factor greater than 5 to the yield stress of the pivot material, for the worst load case condition. The peak weld stress is calculated in the attachment weld of the pivot to the remainder of the structure, at 7389psi.

The bolt loads are calculated in the ANSYS model assuming the full load is taken only through the bolt joints at all times, with no contribution from the center support.

A great deal of the effort has been spent to verify the theoretical predictions and will be presented in section 9 of this paper.

ELEMENT TYPES

Beam4 Elements, used for all structural tubing.

Shell63 Elements, used for -6 plate and center tube

REAL CONSTANTS

REAL CONSTANT SET 1, used for -6 plate

2.0000	2.0000	2.0000	2.0000	0.	0.	0.	1.0000	1.0000	0.	0.	0.

REAL CONSTANT SET 2, used for center tube

1.0000	1.0000	1.0000	1.0000	0.	0.	0.	0.50000	0.50000	0.	0.	0.

REAL CONSTANT SET 3, used for structural tubing

19.000	286.60	286.60	10.000	10.000	0.	0.	573.20	0.	0.	0.	0.

REAL CONSTANT SET 4, used for structural tubing

19.000	286.60	286.60	10.000	10.000	0.	0.	573.20	0.	0.	0.	0.

REAL CONSTANT SET 5, used for pivot shaft

12.566	12.566	12.566	4.0000	4.0000	0.	0.	25.133	0.	0.	0.	0.

MATERIAL PROPERTIES

MATERIAL NUMBER 1, used for structural tubing.

EX = 0.28000E+08

NUXY = 0.30000

MATERIAL NUMBER 2, used for -6 plate and massless center tube.

EX = 0.28000E+08

NUXY = 0.30000

MATERIAL NUMBER 3, used for load generating center tube.

EX = 0.90000E+08

NUXY = 0.30000

DENS = 15.177

The results of the ANSYS models show that the maximum stress occurring within the 10 x 10 x 1/2" wall structural tubing occurs when the gravity vector is at 0 degrees (i.e.: The Horizontal Position) with a maximum positive stress of 3021 PSI, at 45 degrees this reduces to 2104 PSI, and further reduces to 2429 PSI at 90 degrees. Listings of the element tables for the structural tubing for the 0 degree, 45 degree and 90 degree gravity vector cases follow in the appendix.

The highest loading conditions occur at the bolted joint locations. The loads which the stem plate connection bolts will see during these worst case models are of extreme interest to us and have driven the design of this fixture. Each connection point has 3 high strength 200 KSI (min) yield bolts per 4 connection points for a total of 12 bolts.

Loads and stresses on detailed structures such as pivots, center cone post, spacers, stem plate, are treated analytically and follow as individual calculations.

The choice of whether the center cone support is used or not is driven by the deflection of the EM in the horizontal orientation, and will be determined with the assistance of the CDF Plug Physicists. There is no hard and fast number for the allowable deflection limit. We have lifted the EM through simple hoists, always in the horizontal position with 4 pick points, with either 60 degrees or 30 degrees between the closest connections, without any problems. The fixture attaches with 30 degrees between the connections, so the deflection can be expected to increase on the order of the cube of the ratio of the maximum span across the device. The deflection plots included show the center support can reduce the maximum deflection by about 50%, to 0.110", by minimizing the deflection in the line of the fixture, but with the deflection in the direction perpendicular to the line of the fixture remaining. During the trial lift, we propose to NOT use the center support system, and evaluate the situation afterwards.

1

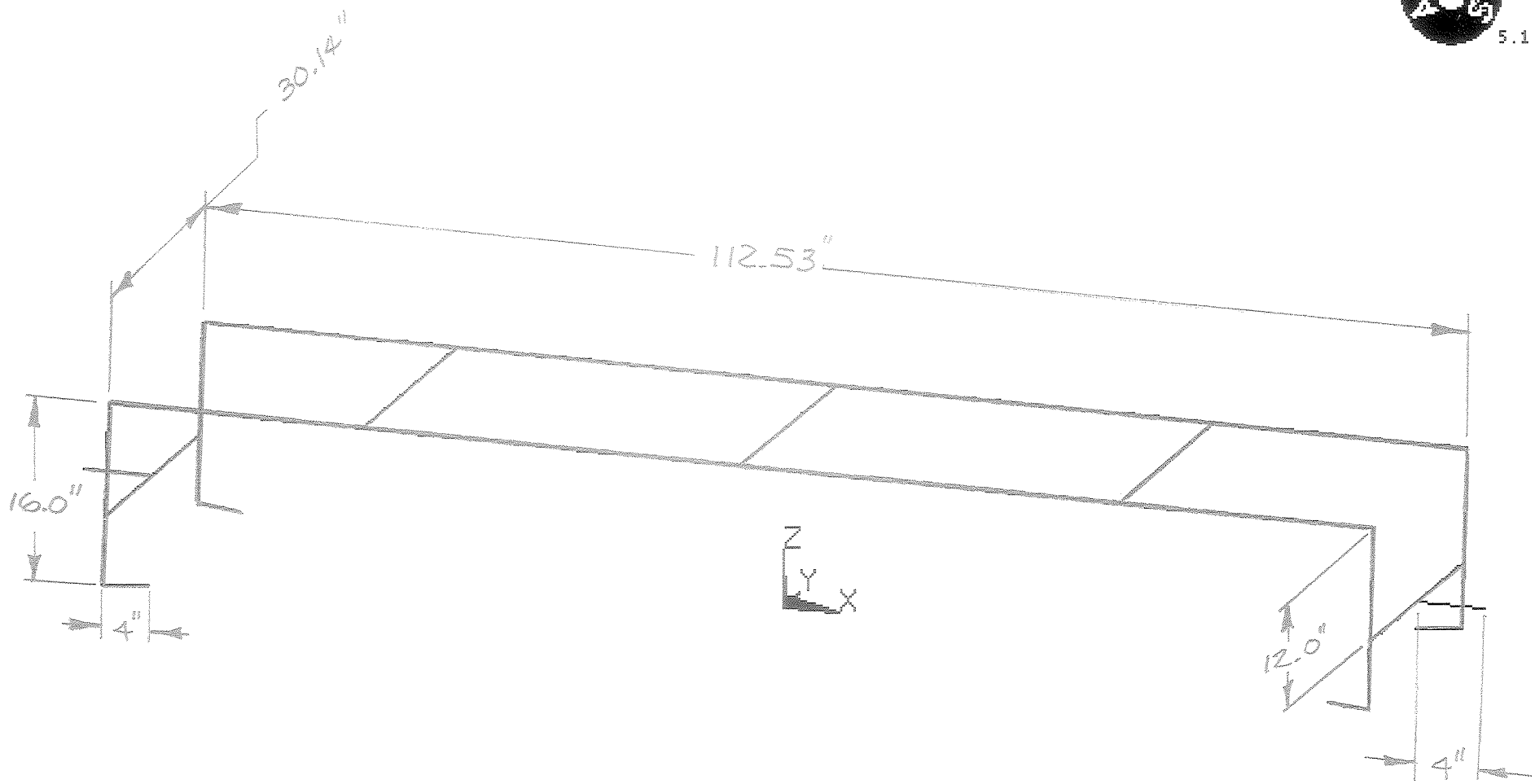

CDF EM LIFTING FIXTURE
GENERAL MODEL DIMENSIONS

JEH

7-8-97

COORDINATE SYSTEMS FOR ANSYS RESULTS

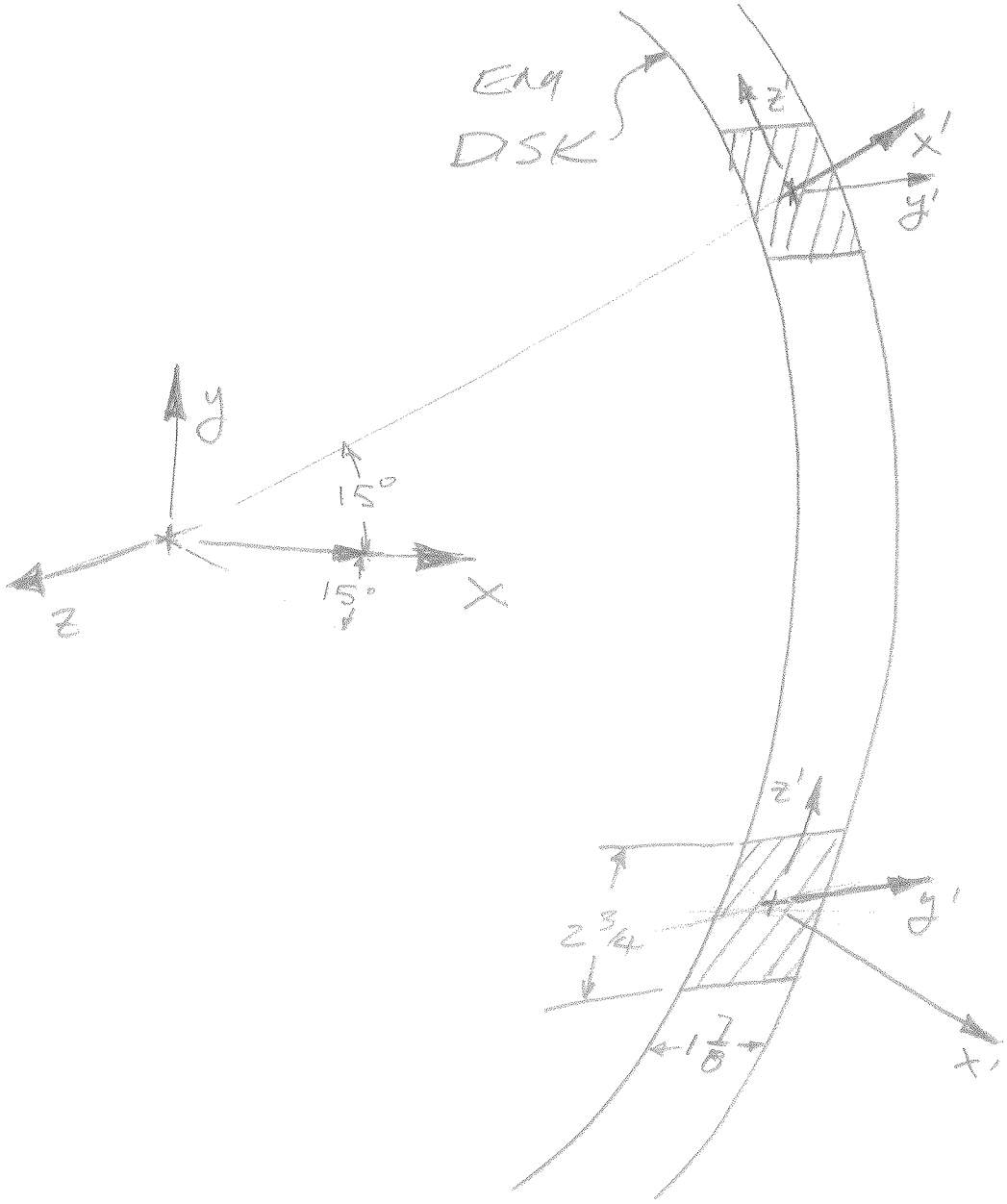

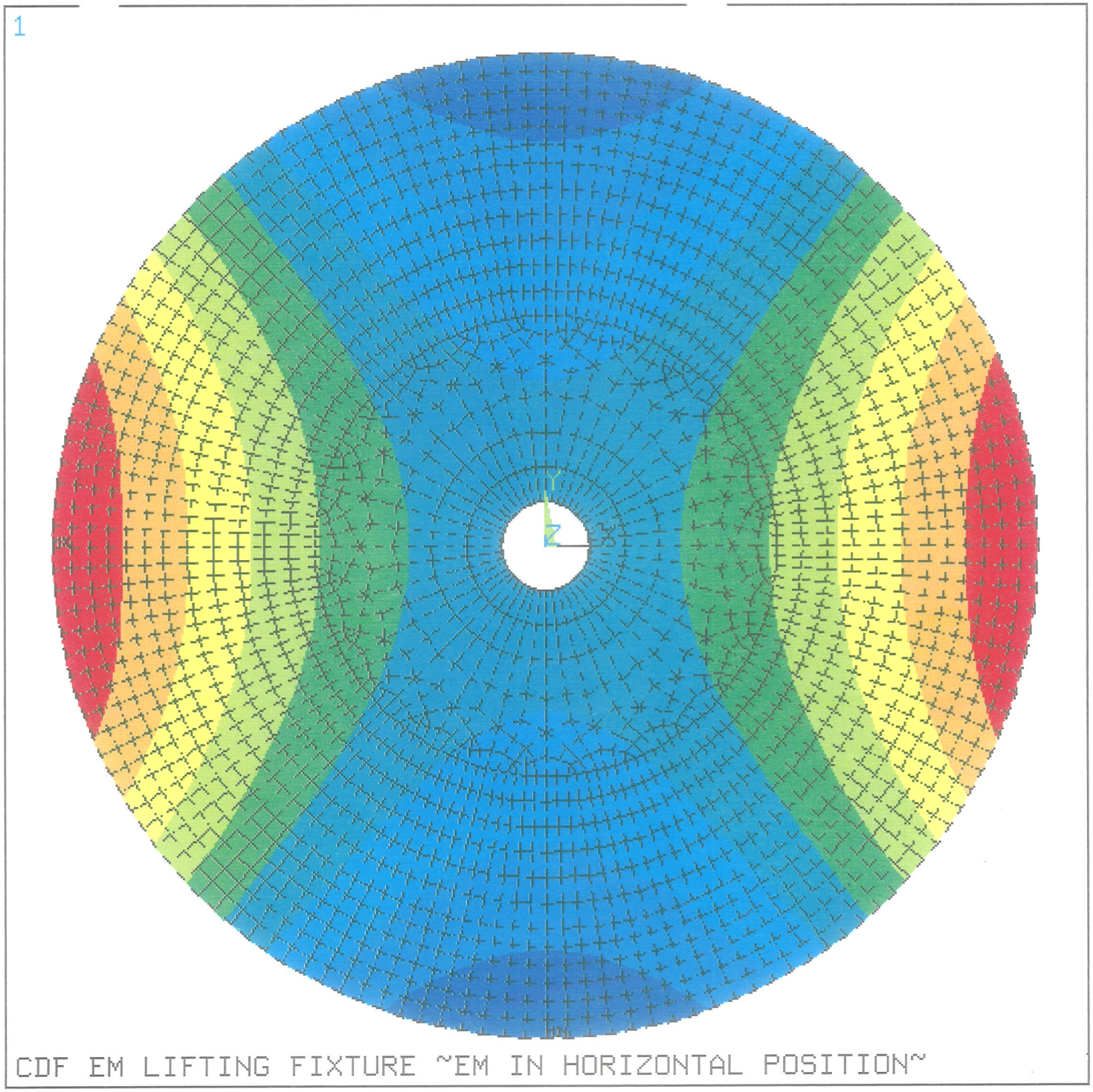

ANSYS 5.1
JUN 11 1997
13:28:27
NODAL SOLUTION
STEP=1
SUB =1
TIME=1
UZ
TOP
RSYS=0
DMX =0.20166
SEPC=31.004
SMN =-0.20166
SMX =0.008596

-0.20166
-0.178298
-0.154937
-0.131575
-0.108213
-0.084851
-0.061489
-0.038128
-0.014766
0.008596

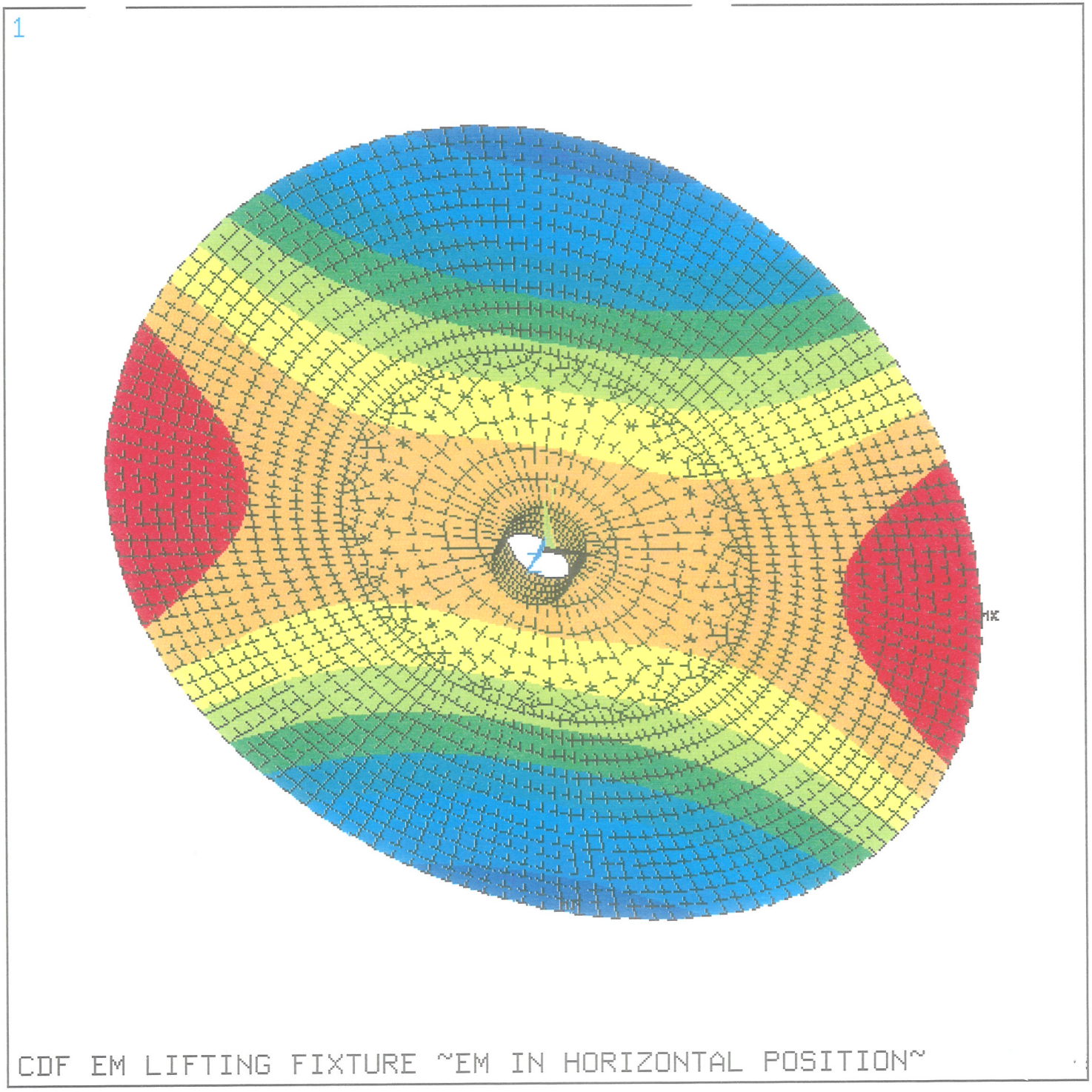
1
MX
ANSYS 5.1
JUN 11 1997
14:32:36
NODAL SOLUTION
STEP=1
SUB =1
TIME=1
UZ
TOP
RSYS=0
DMX =0.110362
SEPC=33.646
SMN =-0.110362
SMX =0.002244
-0.110362
-0.09785
-0.085338
-0.072827
-0.060315
-0.047803
-0.035291
-0.02278
-0.010268
0.002244
CDF EM LIFTING FIXTURE ~EM IN HORIZONTAL POSITION~

Calculations for the Pivot, Stem plate, and boundary calculation on the stress in the box beam.

SECTION PROPERTIES FOR STRUCTURAL ELEMENTS

10 x 10 x 1/2 BOX

$I = 271 \text{ in}^4$

$I_p = 542 \text{ in}^4$

$A = 18.4 \text{ in}^2$ (AISC)

ASTM A 500 TYP YIELD 46,000 psi

TYP TENSILE 58,000 psi

ALLOWABLE → $\frac{46,000}{3} = \underline{15,333 \text{ psi}}$

BOX BEAM AND BOX BEAM WELDS

PIVOT IS A36 MAT'L

ALLOWABLE → $\frac{36000}{3} = 12000 \text{ psi}$

THE PEAK STRESS IN <u>ANY</u> PORTION OF THE STRUCTURE IS CALCULATED TO BE 7389 psi IN A WELD AROUND THE PIVOT.

Allowable stress - Weld

AWS D1.1 allows stresses, in shear, to 0.30 of the tensile strength of the weld up to 0.40 of the yield of the base material for statically loaded structures.

AWS D1.1 allows stresses, in shear, to 0.27 of the tensile strength of the weld up to 0.36 of the yield of the base material for dynamically loaded structures.

The weld metal must be properly matched (see attached tables).

The Below the Hook standard limits are to 0.33 of yield strength anywhere in the structure, a more stringent requirement than the above, for the materials in question.

All welded joints are full penetration, full strength welds. The weld metal used has a yield > 60,000 psi. Weld stress will be less than that in the base metal for the box beam, and the box beam limit will be used throughout.

ANSI/AWS D1.1-90
An American National Standard

1990

Structural Welding Code

Steel

AMERICAN WELDING SOCIETY

Table 8.1
Allowable Stresses in Welds (see 8.4.1)

Type of Weld	Stress in Weld[1]		Allowable Stress	Required Weld Strength Level[2]
Complete joint penetration groove welds	Tension normal to the effective area		Same as base metal	Matching weld metal shall be used. See Table 4.1.
	Compression normal to the effective area		Same as base metal	Weld metal with a strength level equal to or one classification (10 ksi[69 MPa]) less than matching weld metal may be used.
	Tension or compression parallel to the axis of the weld		Same as base metal	Weld metal with a strength level equal to or less than matching weld metal may be used.
	Shear on the effective areas		0.30 × nominal tensile strength of weld metal, except shear stress on base metal shall not exceed 0.40 × yield strength of base metal	
Partial joint penetration groove welds	Compression normal to effective area	Joint not designed to bear	0.50 × nominal tensile strength of weld metal, except stress on base metal shall not exceed 0.60 × yield strength of base metal	Weld metal with a strength level equal to or less than matching weld metal may be used.
		Joint designed to bear	Same as base metal	
	Tension or compression parallel to the axis of the weld[3]		Same as base metal	
	Shear parallel to axis of weld		0.30 × nominal tensile strength of weld metal, except shear stress on base metal shall not exceed 0.40 × yield strength of base metal	
	Tension normal to effective area		0.30 × nominal tensile strength of weld metal, except tensile stress on base metal shall not exceed 0.60 × yield strength of base metal	
Fillet welds	Shear on effective area		0.30 × nominal tensile strength of weld metal	Weld metal with a strength level equal to or less than matching weld metal may be used.
	Tension or compression parallel to axis of weld[3]		Same as base metal	
Plug and slot welds	Shear parallel to faying surfaces (on effective area)		0.30 × nominal tensile strength of weld metal, except shear stress on base metal shall not exceed 0.40 × yield strength of base metal	Weld metal with a strength level equal to or less than matching weld metal may be used.

Notes:
1. For definition of effective area, see 2.3.
2. For matching weld metal, see Table 4.1.
3. Fillet weld and partial joint penetration groove welds joining the component elements of built-up members, such as flange-to-web connections, may be designed without regard to the tensile or compressive stress in these elements parallel to the axis of the welds.

Table 9.1
Allowable Stresses in Welds (see 9.3.1)

Type of Weld	Stress in Weld[1]		Allowable Stress	Required Weld Strength Level[2]
Complete joint penetration groove welds	Tension normal to the effective area		Same as base metal	Matching weld metal must be used. See Table 4.1.
	Compression normal to the effective area		Same as base metal	Weld metal with a strength level equal to or one classification (10 ksi [69 MPa]) less than matching weld metal may be used.
	Tension or compression parallel to the axis of the weld		Same as base metal	Weld metal with a strength level equal to or less than matching weld metal may be used.
	Shear on the effective area		0.27 × nominal tensile strength of weld metal, except shear stress on base metal shall not exceed 0.36 × yield strength of base metal	
Partial joint penetration groove welds	Compression normal to effective area	Joint not designed to bear	0.45 × nominal tensile strength of weld metal, except stress on base metal shall not exceed 0.55 × yield strength of base metal	Weld metal with a strength level equal to or less than matching weld metal may be used.
		Joint designed to bear	Same as base metal	
	Tension or compression parallel to the axis of the weld[3]		Same as base metal	
	Shear parallel to axis of weld		0.27 × nominal tensile strength of weld metal, except shear stress on base metal shall not exceed 0.36 × yield strength of base metal	
	Tension normal to effective area		0.27 × nominal tensile strength of weld metal, except tensile stress on base metal shall not exceed 0.55 × yield strength of base metal	
Fillet welds	Shear on effective area		0.27 × nominal tensile strength of weld metal	Weld metal with a strength level equal to or less than matching weld metal may be used.
	Tension or compression parallel to axis of weld[3]		Same as base metal	
Plug and slot welds	Shear parallel to faying surfaces (on effective area)		0.27 × nominal tensile strength of weld metal, except shear stress on base metal shall not exceed 0.36 × yield strength of base metal	Weld metal with a strength level equal to or less than matching weld metal may be used.

1. For definition of effective area, see 2.3.
2. For matching weld metal, see Table 4.1.
3. Fillet weld and partial joint penetration groove welds joining the component elements of built-up members, such as flange-to-web connections, may be designed without regard to the tensile or compressive stress in these elements parallel to the axis of the welds.

LOAD THROUGH PIVOT

15,000 LBS / PIVOT

FROM 332567 –

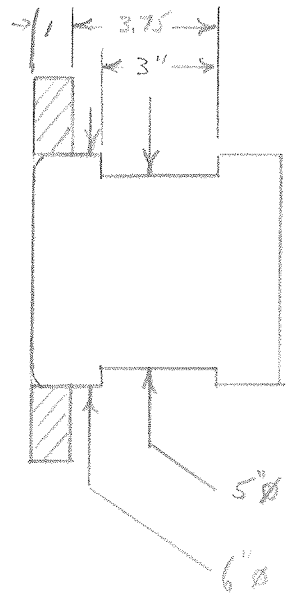

WELD JOINING PIVOT TO PIVOT PLATE SPEC'D

0.5" FILLET

MAXIMUM MOMENT: (LOAD AT FAR POINT OF PIVOT)

$$15000 \text{ LBS} \times 4.75'' = 71{,}250 \text{ LB}\cdot\text{IN}$$

FOR PIVOT: 5" Ø SECTION

$$I = \frac{\pi (2.5)^4}{4} = 30.68 \text{ in}^4$$

$$c = 2.5''$$

$$\sigma_{max} = \frac{Mc}{I} = \frac{71250\ (2.5)}{30.68 \text{ in}^4}$$

$$= 5806 \text{ psi}$$

$$A = \pi r^2 = 19.63 \text{ in}^2$$

$$\tau = \frac{15000 \text{ lb}}{19.63 \text{ in}^2} = 764 \text{ psi}$$

STRESS IN WELD. DON'T ACCOUNT FOR BACKSIDE WELD.

WELD IS 6" ID, 7" OD. 0.5" FILLET.

MIN ROOT = 0.353" = t_w

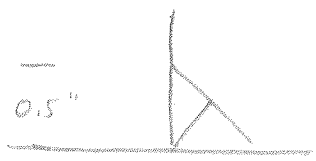

$$I_{weld} = \frac{\pi}{4}(R_o^4 - R_i^4)$$

use $R_o = R_i + t_w$

$$= \frac{\pi}{4}(3.353^4 - 3^4)$$

$$= 35.65 \text{ in}^4$$

$$\sigma_{max} = \frac{Mc}{I} = \frac{71250\,(3.353)}{35.65}$$

$$= 6701 \text{ psi}$$

$$\tau = \frac{P}{\pi D t_w}$$

$$= \frac{15000}{\pi(6)(.353)} = 2254 \text{ psi}$$

$$\sigma_{1,2} = \frac{\sigma}{2} \pm \sqrt{\left(\frac{\sigma}{2}\right)^2 + \tau^2}$$

$$= 3351 \pm 4038$$

$$= \boxed{7389} \div 687 \text{ psi}$$

TORSION

IN PIVOT:

$$T = \mu F r_{min}$$

$$= \mu (15000)(2.5)$$

$$= 37500\mu \text{ in-LB}$$

$$\tau_{max} = \frac{T D}{2 J}$$

$$= \frac{37500\mu (5)}{2\left\{\frac{\pi}{32}(5)^4\right\}}$$

$$= 1528\mu \text{ psi}$$

$\mu = 0.2$,

$\tau_{max} = 306$ psi

$\mu = 1.0$

$\tau_{max} = 1528$ psi

IN WELD OF PIVOT TO PLATE

$$J = \frac{\pi}{32}\left\{6.706^4 - 6^4\right\}$$

$$= 71.31 \text{ in}^4$$

$$\tau_{max} = \frac{37500\mu (6.706)}{2(71.31)}$$

$$\tau_{max} = 1763\mu \text{ psi}$$

$\mu = 0.2$

$\tau_{max} = 353$ psi

PIVOT ASSEMBLY TO BOX TRAILER

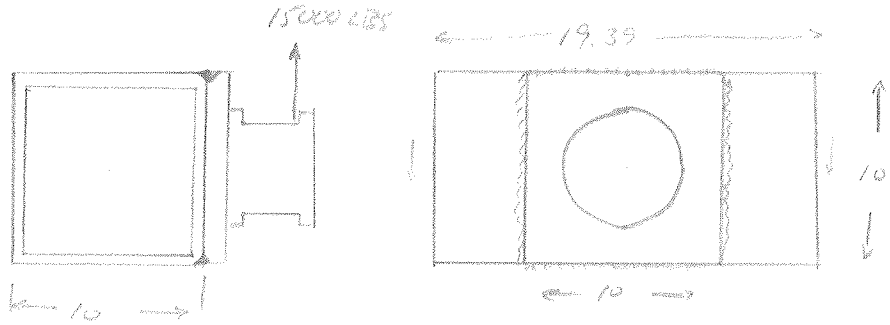

MOMENT 71250 LB-IN

WELD IS 0.5" BOTH SIDES, BUT WE

0.353" THROAT THICKNESS

$$\sigma = \frac{Mc}{I}$$

$$I = \frac{1}{12}\left[(10.706)(10.706)^3 - (10)(10)^3\right]$$

$$= 261.44 \text{ in}^4$$

$$c = 10.706''/2 = 5.353 \text{ in}$$

$$\sigma_{max} = \frac{71250\,(5.353)}{261.44} = 1458 \text{ psi}$$

$$\tau = \frac{15000}{4(10)(.353)} = 1062 \text{ psi}$$

Box Beam
(Horizontal Position)

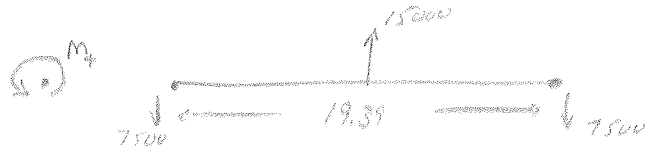

Each end of the Box Beam is

7500 LB SHEAR

72713 IN-LB BENDING

35625 IN-LB TORSION

Box is 0.5" 0.5" 12" A 500

Misc. $I = 271 \text{ in}^4$

$I_p = 542 \text{ in}^4$

$A = 10.4 \text{ in}^2$

$$\sigma_{max} = \frac{Mc}{I}$$

$$= \frac{72713\,(5)}{271}$$

$$= 1342 \text{ psi}$$

$$\tau_{shear} = \frac{7500}{18.4} = 408 \text{ psi}$$

$$\tau_{max} = \frac{M_t}{\alpha b h^2}$$

$$= \frac{35625}{.208(10)(10)^2}$$

$$= 171 \text{ psi}$$

Weld is full penetration, full thickness, complete perimeter

Load from pivot has been transmitted to the parallel box beams. Boundary value calculation puts upper bound on those stresses, and supports stresses calculated in detail by ANSYS

Box Beam
(VERTICAL EM POSITION)

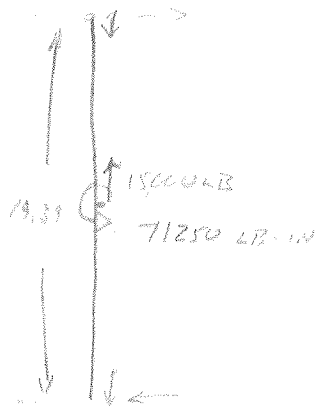

$$\sigma_{axial} = \frac{7500}{18.4} = 408 \text{ psi}$$

$$\sigma_{bend} = \frac{Mc}{I}$$

$$= \frac{\left(\frac{71250}{2}\right)(9)}{2917} = 658 \text{ psi}$$

$$\tau_{end} = \frac{(71250/19.39)}{18.4} = 200 \text{ psi}$$

<u>WELD IS FULL PENETRATION, FULL THICKNESS, COMPLETE PERIMETER</u>

5.1

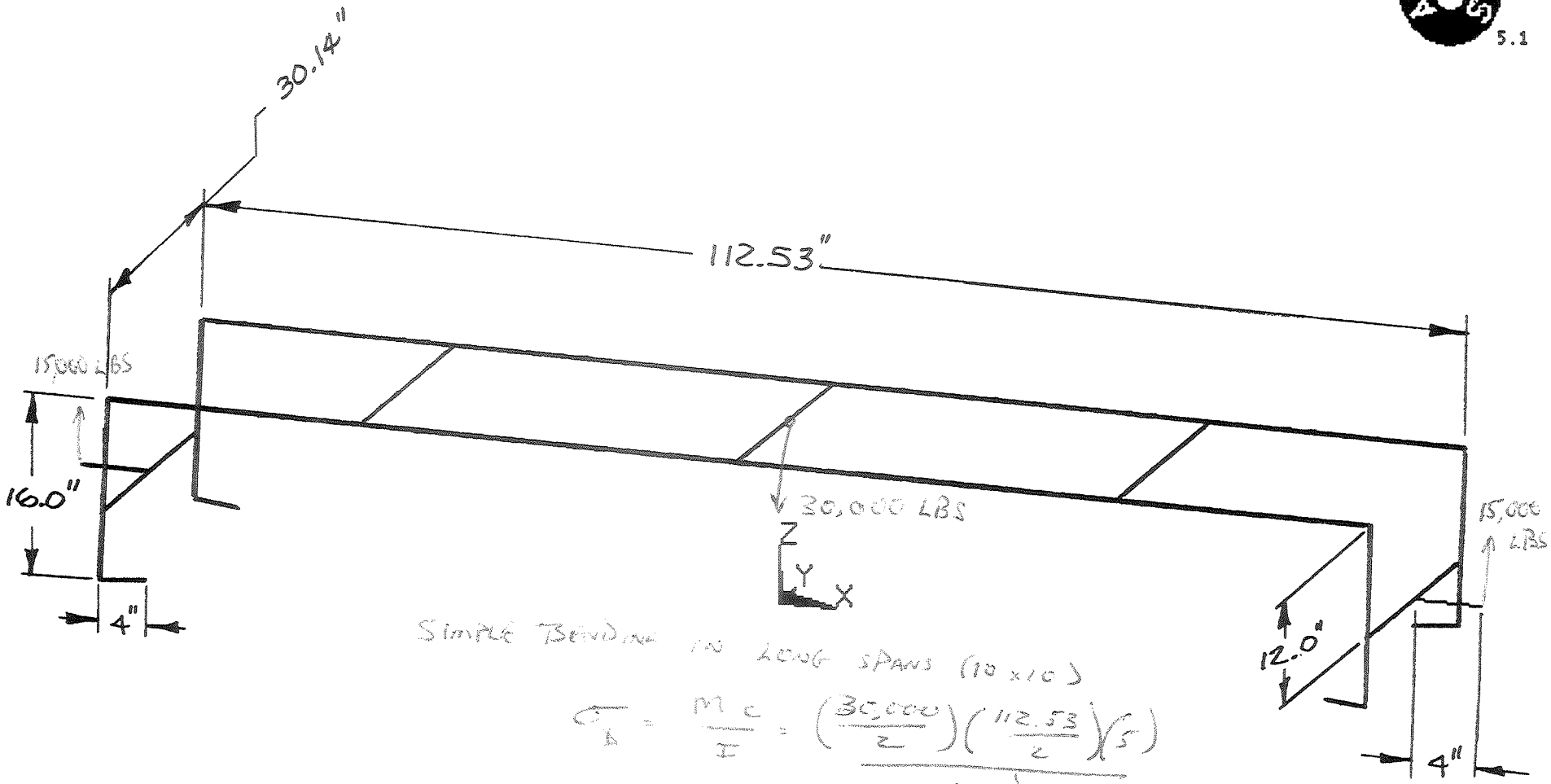

SIMPLE BENDING IN LONG SPANS (10 x 16)

$$\sigma_b = \frac{Mc}{I} = \frac{\left(\frac{30{,}000}{2}\right)\left(\frac{112.53}{2}\right)(5)}{2\,(271)}$$

$$= 7785 \text{ psi}$$

$$\tau = \frac{(30{,}000/2)}{2\,(18.4)} = 407 \text{ psi}$$

CDF EM LIFTING FIXTURE

BEAM BOUNDARY GAGE CALCULATION

THE STEM PLATE TRANSMITS A 15,100 LB LOAD FROM THE BOLT CONNECTION TO THE BOX BEAM.

IT IS NOMINALLY 1" x 13" IN CROSS SECTION, SUCH THAT THE MAXIMUM LOAD IS ON THE ORDER OF 1154 psi.

IT IS WELDED TO A 10x10 BOX BEAM, WITH A WELD IDENTICAL TO THAT ALREADY SHOWN FOR THE PIVOT ATTACHMENT.

THE LOAD, HOWEVER IS 11,500 MAX IN SHEAR AND HAS A SMALLER MOMENT ARM (1/2" vs. 5 1/4" FOR THE PIVOT).

$$\tau = \frac{11,500}{4(10.25)(1/4)} = 1122 \text{ psi}$$

$$\sigma = \frac{(11500)(1/2)(5.25)}{179} = 169 \text{ psi.}$$

Bolt Joint Loads

The following are plots and the data tables extracted from the ANSYS model which show the maximum loads transmitted through the EM / Lifting Fixture connections.

The peak load occurs through the lower connection, and is 11,500 lbs in shear.

The bolted joint design (repeated 3 times at each connection, for a total of 12 joints around the device) is described, including the design of the spacer which is sized to keep the joint from opening due to any bending effects.

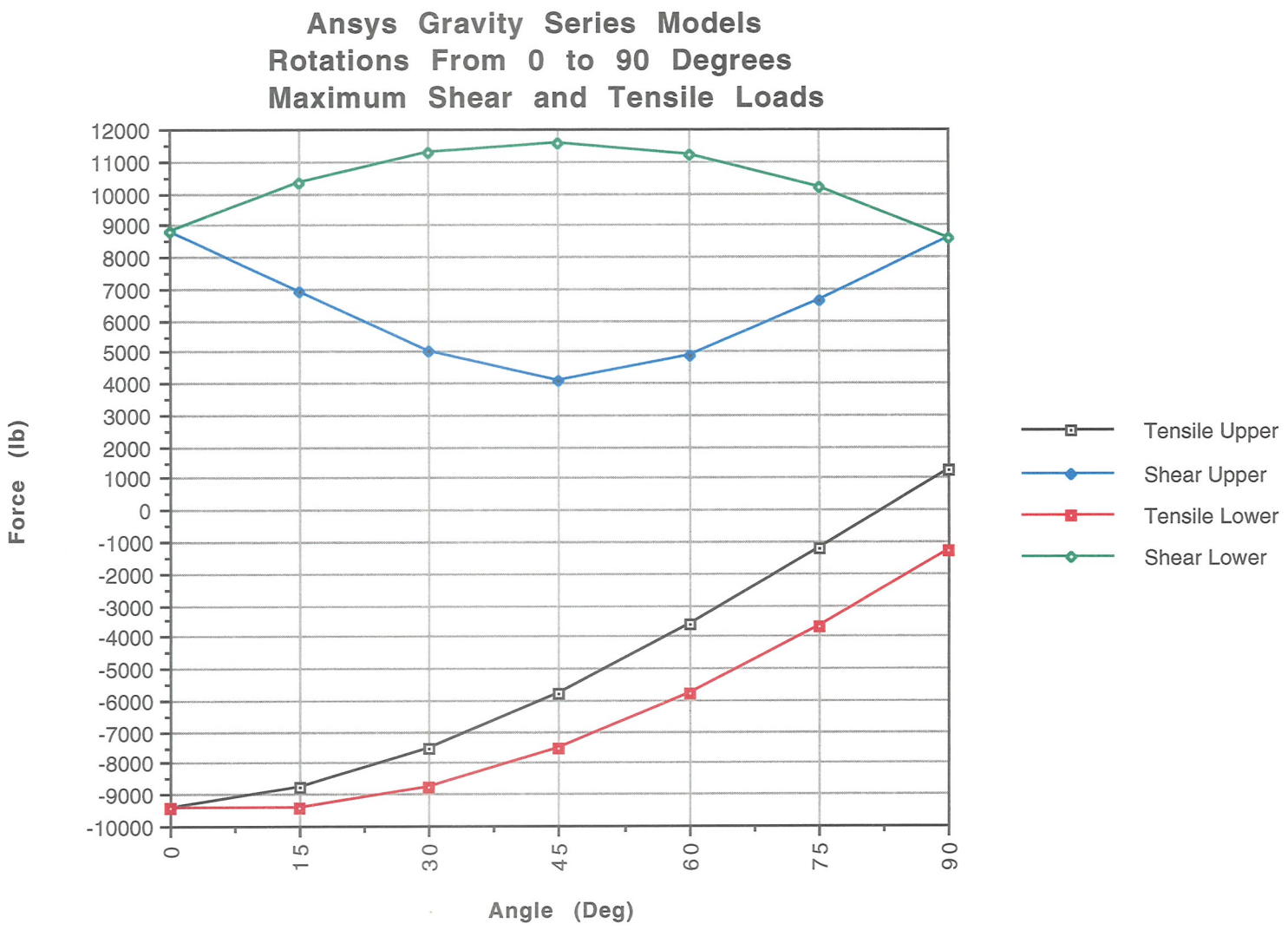
Ansys Gravity Series Models
Rotations From 0 to 90 Degrees
Maximum Shear and Tensile Loads
Force (lb)
12000
11000
10000
9000
8000
7000
6000
5000
4000
3000
2000
1000
0
-1000
-2000
-3000
-4000
-5000
-6000
-7000
-8000
-9000
-10000
0
15
30
45
60
75
90
Angle (Deg)
Tensile Upper
Shear Upper
Tensile Lower
Shear Lower

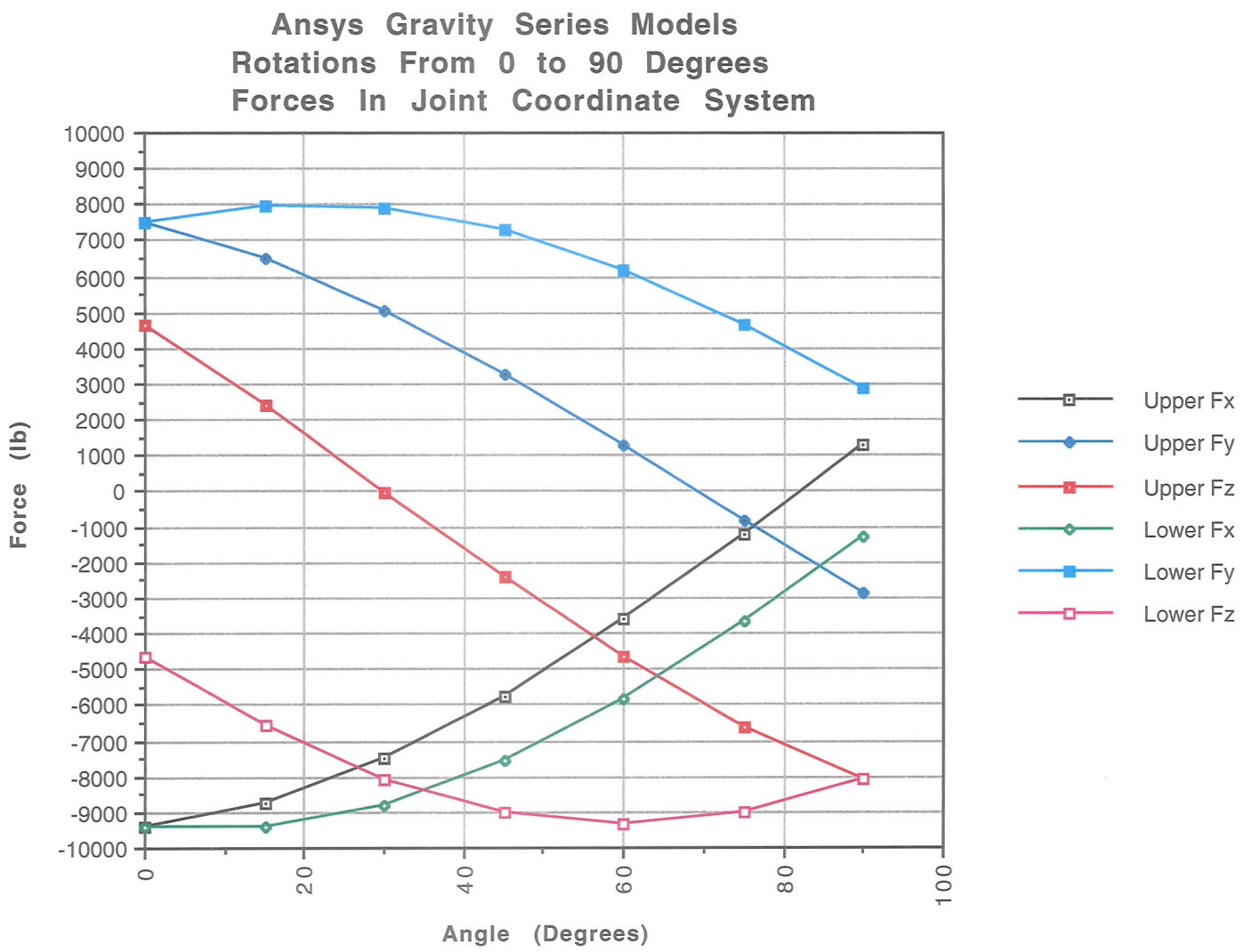
Ansys Gravity Series Models
Rotations From 0 to 90 Degrees
Forces In Joint Coordinate System
Force (lb)
10000
9000
8000
7000
6000
5000
4000
3000
2000
1000
0
-1000
-2000
-3000
-4000
-5000
-6000
-7000
-8000
-9000
-10000
0
20
40
60
80
100
Angle (Degrees)
Upper Fx
Upper Fy
Upper Fz
Lower Fx
Lower Fy
Lower Fz

Connection Loads For Rotation Angle 0 Degrees TO 90 DEGREES
Upper Connection Point (2263) and Lower Connection Point (2265)
In The Element Coordinate System

STAT ELEM	CURRENT FXPRIME	CURRENT FYPRIME	CURRENT FZPRIME	
2263	-9416.0	7478.6	4645.6	0 DEGREE
2265	-9416.0	7478.6	-4645.6	
STAT ELEM	CURRENT FXPRIME	CURRENT FYPRIME	CURRENT FZPRIME	
2263	-8763.8	6488.1	2394.7	15 DEGREE
2265	-9426.7	7959.6	-6580.1	
STAT ELEM	CURRENT FXPRIME	CURRENT FYPRIME	CURRENT FZPRIME	
2263	-7514.3	5055.3	-19.546	30 DEGREE
2265	-8794.8	7898.0	-8066.0	
STAT ELEM	CURRENT FXPRIME	CURRENT FYPRIME	CURRENT FZPRIME	
2263	-5752.7	3278.0	-2432.4	45 DEGREE
2265	-7563.6	7298.3	-9002.3	
STAT ELEM	CURRENT FXPRIME	CURRENT FYPRIME	CURRENT FZPRIME	
2263	-3599.1	1277.4	-4679.5	60 DEGREE
2265	-5817.0	6201.2	-9325.1	
STAT ELEM	CURRENT FXPRIME	CURRENT FYPRIME	CURRENT FZPRIME	
2263	-1200.2	-810.28	-6607.7	75 DEGREES
2265	-3673.9	4681.5	-9012.4	
STAT ELEM	CURRENT FXPRIME	CURRENT FYPRIME	CURRENT FZPRIME	
2263	1280.5	-2842.8	-8085.5	90 DEGREES
2265	-1280.5	2842.8	-8085.5	

BOLT LOADS IN x', y', z' COORDINATE SYSTEM

JEH

6-10-97

MODIFIED BOLTED JOINT

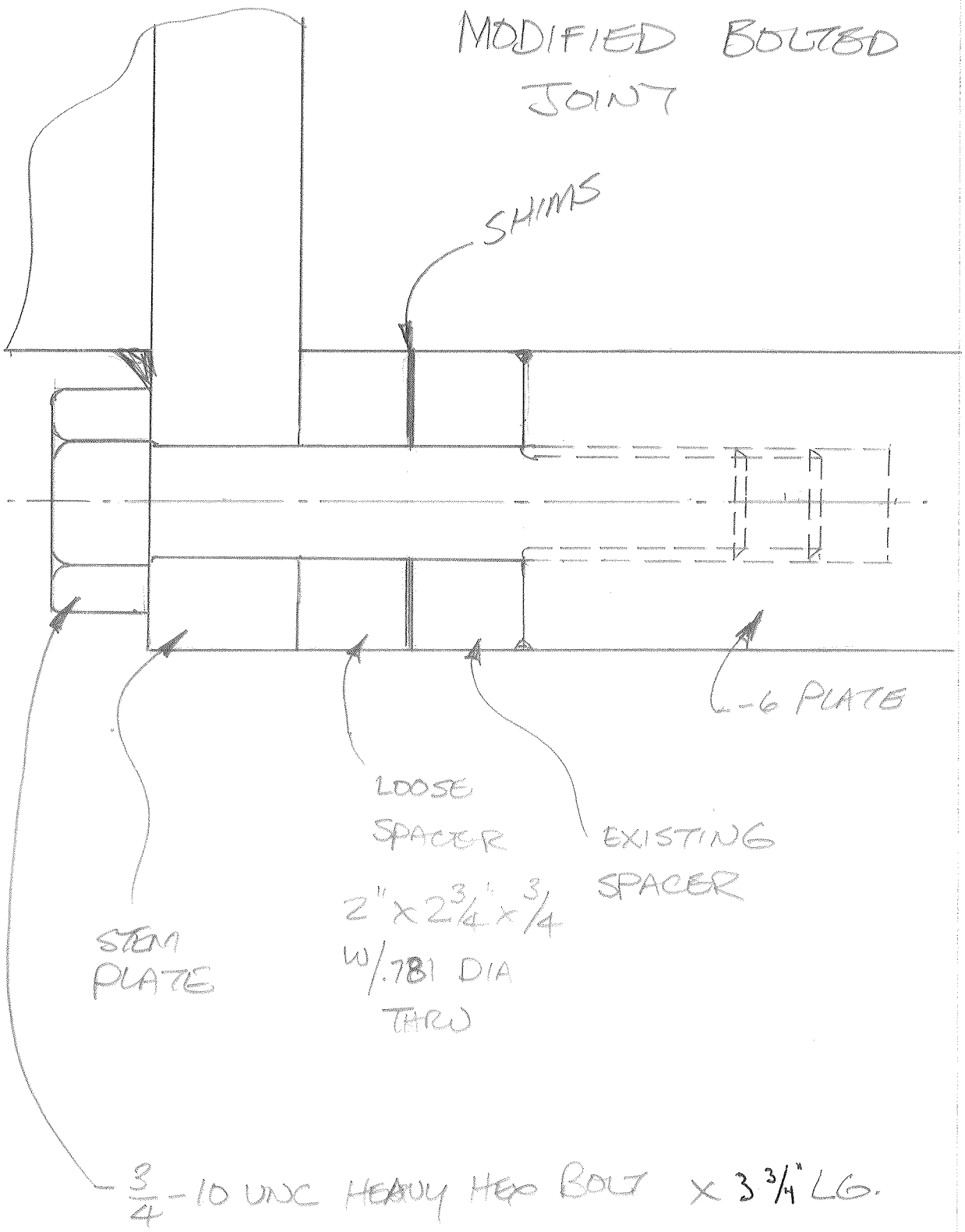

JEH 9-2-97

SPACER DESIGN

WHAT EXACTLY ARE THE MOMENTS AND FORCES WITHIN THE BOLTED JOINT?

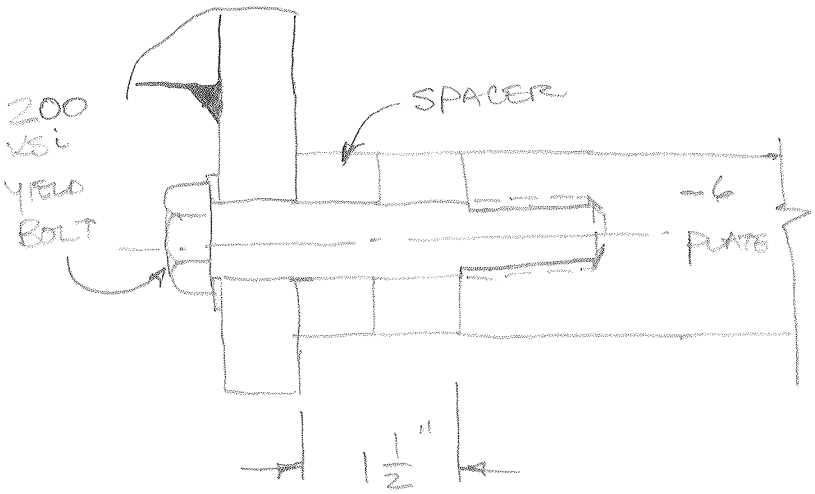

MAXIMUM SHEAR LOAD = 11,500#
MAXIMUM TENSILE LOAD = 9,500#

THE BOLT PRESTRESS MUST BE GREATER THAN THE MAGNITUDE OF THE BENDING STRESS GENERATED BY THE SHEAR FORCE SUMMED WITH TENSILE STRESS.

OR

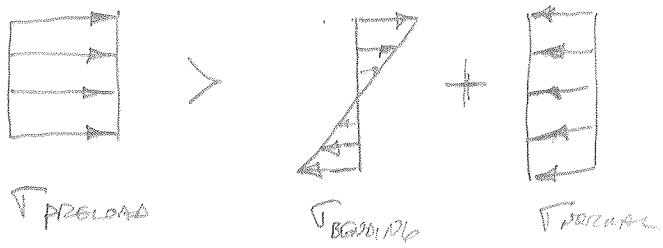

WE HAVE TWO PARAMETERS TO VARY

I_{SPACER} AND A_{SPACER}

JCH 9-2-97

SPACER DESIGN (CONT.)

BOLT PRELOAD IS 61,360 #

JOINT MOMENT IS $(11{,}500^{\#})(1.5'') = 17{,}250$ in-lb.

JOINT TENSILE LOAD IS 9500 #

$$\frac{61{,}360^{\#}}{A} > \frac{17{,}250}{I} + \frac{9500^{\#}}{A}$$

$$\frac{51{,}860}{A} > \frac{17{,}250}{I}$$

$$\frac{I}{A} > \frac{17{,}250}{51{,}860} = .332$$

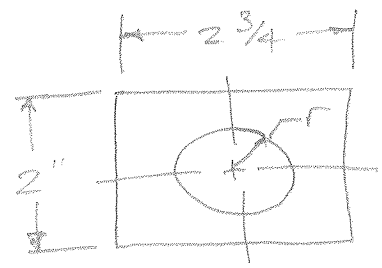

$$A = (2.75)(2) - \pi r^2$$

$$I = \frac{(2.75)(2)^3}{12} - \frac{\pi}{4} r^4$$

$$\frac{I}{A} = \frac{1.83 - .7854 r^4}{5.5 - \pi r^2} = .332$$

$$1.83 - .7854 r^4 = 1.83 - .261 r^2$$

$$-.7854 r^4 + .261 r^2 = 0$$

SUB $r^2 = r$

$$-.7854 r^2 + .261 r = 0$$

$$r^2 = \frac{-b \pm \sqrt{b^2 - 4ac}}{2a}$$

$$r^2 = \frac{-.261 \pm .261}{2(-.7854)}$$

$$r^2 = 0 \text{ OR } .332$$

JEH 9-3-97

WHAT IF $r = \frac{.875}{2}$

$A = 5.5 - .601 = 4.9 \text{ in}^2$

AND $I = 1.833 - .7854(.0366)$

$I = 1.804$

$$\frac{61{,}360}{4.9} \overset{?}{>} \frac{17{,}250}{1.8} + \frac{9500^{\#}}{4.9}$$

$12.5K > 9.6 + 1.9$ $\qquad \frac{12.5}{11.5} = 1.08$

$11.5 \ K$

SO CLEARANCE HOLE IS ENOUGH

BUT ...

WHAT IF $r = .8$

$A = 5.5 - 2.01 = 3.49$

$I = 1.833 - .321 = 1.512$ $\qquad \frac{17.6}{14.1} = 1.25$

then $17.6 > \underbrace{11.4 + 2.7}_{14.1}$

WHAT IF $r = .9$

$A = 5.5 - 2.54 = 2.95$

$I = 1.833 - .515 = 1.318$

then $20.8 > 13.0 + 3.2$ $\qquad \frac{20.8}{16.2} = 1.28$

GIVES MOST MARGIN PRACTICAL!

DESIGN REMAINS!

Evaluation of Radius Relationship

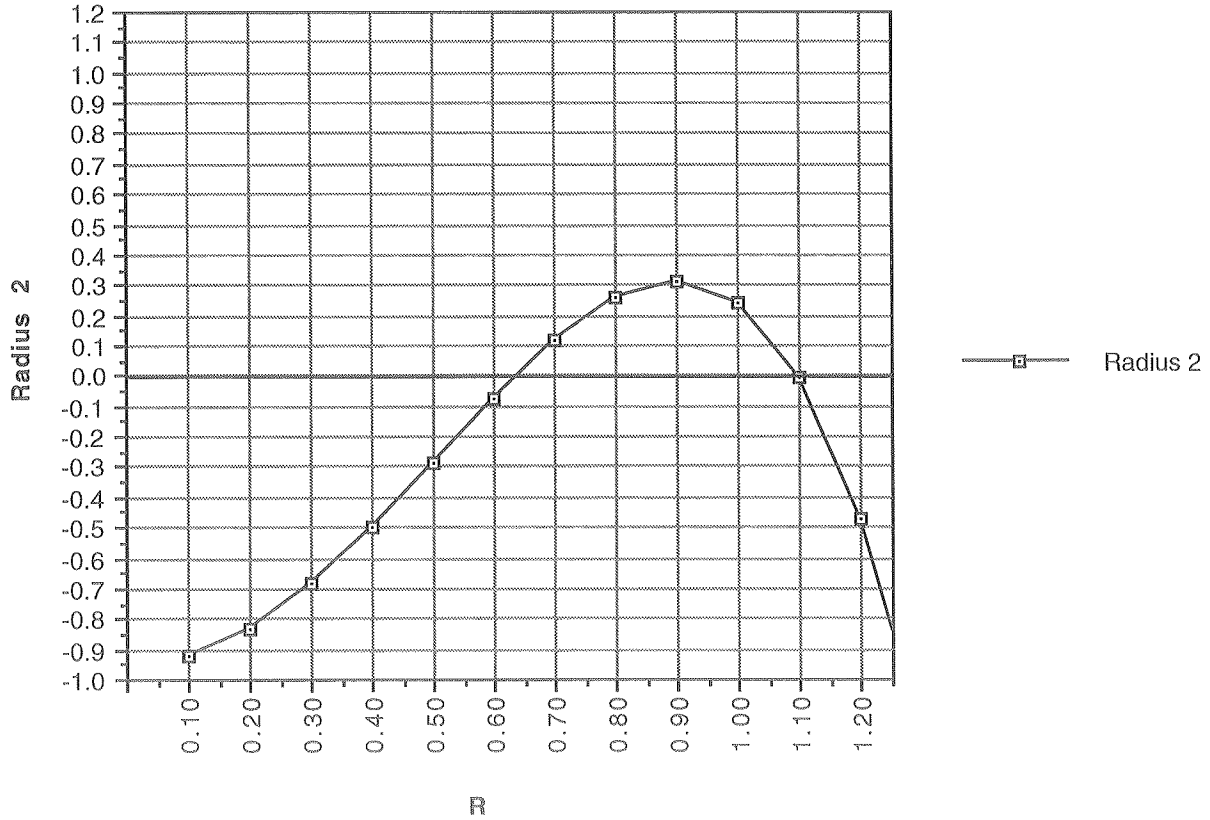

A/I Ratio Vs Radius

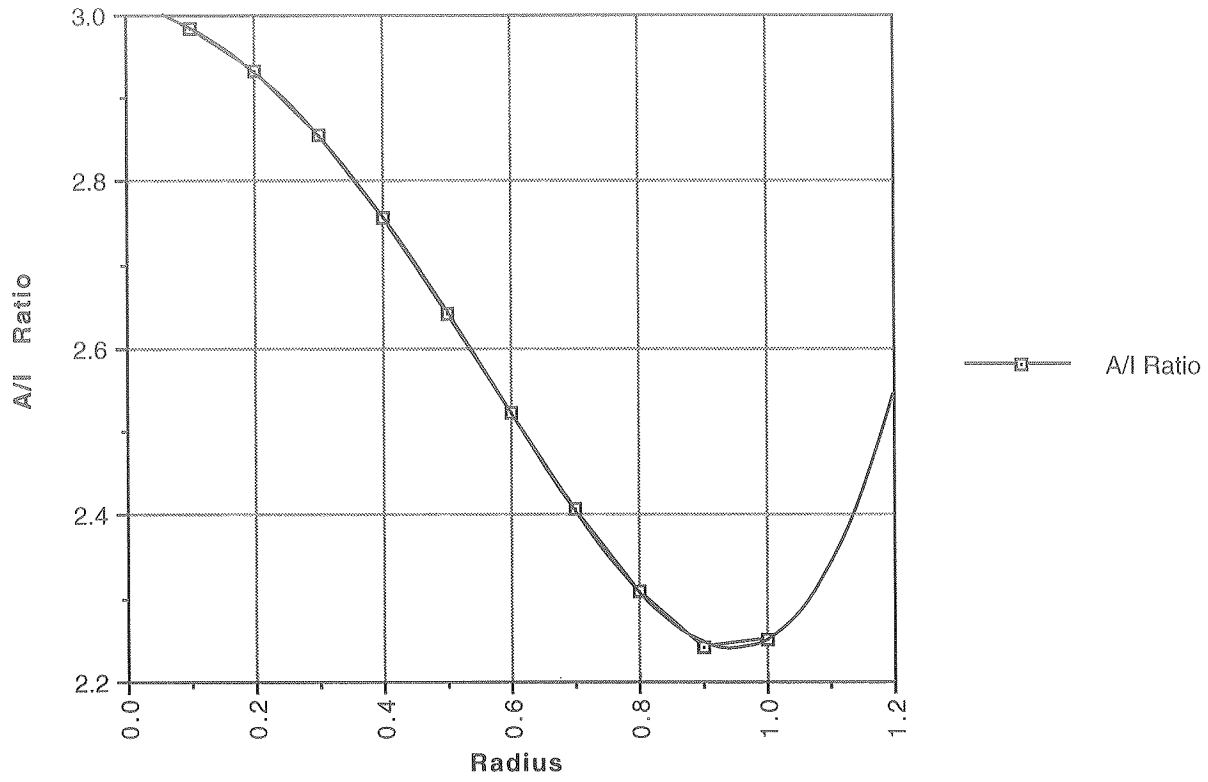

Bolt Loads Through 90 Degree Rotation (Worst Case Possible)								
Eric Haggard TS-Eng 7-3-97								
Top Connection Point	**Rotation**	**0**	**15**	**30**	**45**	**60**	**75**	**90**
Load Case Components	Fx'	-9416	-8763.8	-7514.3	-5752.7	-3599.1	-1200.2	1280.5
	Fy'	7478.6	6488.1	5055.3	3278	1277.4	-810.28	-2842.8
	Fz'	4645.6	2394.7	-19.546	-2432.4	-4679.5	-6607.7	-8085.5
Joint Internal Bending Moment	My'	3739	3244	2528	1639	639	-405	-1421
Joint Internal Bending Moment	Mz'	2323	1197	-10	-1216	-2340	-3304	-4043
Joint Internal Bending Stress	Sigma Y'	1891	1640	1278	829	323	-205	-719
Joint Internal Bending Stress	Sigma Z'	2188	1128	-9	-1146	-2204	-3112	-3808
Load Normal Stress (+ opens gap)	Sigma Normal	1202	1119	959	734	459	153	-163
Bottom Connection Point	**Rotation**	**0**	**15**	**30**	**45**	**60**	**75**	**90**
Load Case Components	Fx'	-9416	-9426.7	-8794.8	-7563.6	-5817	-3673.9	-1280.5
	Fy'	7478.6	7959.6	7898	7298.3	6201.2	4681.5	2842.8
	Fz'	-4645.6	-6580.1	-8066	-9002.3	-9325.1	-9012.4	-8085.5
Joint Internal Bending Moment	My'	3739	3980	3949	3649	3101	2341	1421
Joint Internal Bending Moment	Mz'	-2323	-3290	-4033	-4501	-4663	-4506	-4043
Joint Internal Bending Stress	Sigma Y'	1891	2012	1997	1845	1568	1184	719
Joint Internal Bending Stress	Sigma Z'	-2188	-3099	-3799	-4240	-4392	-4244	-3808
Load Normal Stress (+ opens gap)	Sigma Normal	1202	1203	1123	965	742	469	163
BOLTED JOINT CONNECTION								
Spread Sheet to Calculate Required Bolt Preload								
Spacer Area (in^2)	2.6116							
Izz (in^4)	0.9953							
Iyy (in^4)	2.7195							
Spacer Dist. Extreme Fiber (Izz)	0.9375							
Spacer Dist. Extreme Fiber (Iyy)	1.38							
Bolt Yield Stress (psi)	***230000***							
Bolt Diameter (in)	***0.750***							
Bolt Preload Maximum (lb)	***70563***	SET AT 70% OF YIELD OF BOLT						
Bolt Min. Thread Diameter (in)	0.625							
Bolt Shear Area (in^2)	0.307							
Bolt Surface Coefficient	0.15							
Bolt Moment of Inertia (in^4)	0.02							
Torque Required (ft-lb)	662							
RESULTS								
Upper Bolt								
Spacer Stress Due to Bolt Preload		-27020	-27020	-27020	-27020	-27020	-27020	-27020
Load Induced Normal Stress (psi)	(+ opens gap)	1202	1119	959	734	459	153	-163
Net Applied Bolt Normal Stress		-25818	-25901	-26060	-26285	-26560	-26866	-27183
Load Bending Stress Maximums (psi)		4078	2768	1287	1974	2527	3317	4527
JOINT SLIPPING (IF > THAN 1)		0.16	0.11	0.05	0.08	0.10	0.12	0.17
Safety Factor		6.33	9.36	20.25	13.31	10.51	8.10	6.01
Lower Bolt								
Spacer Stress Due to Bolt Preload		-27020	-27020	-27020	-27020	-27020	-27020	-27020
Load Induced Normal Stress (psi)	(+ opens gap)	1202	1203	1123	965	742	469	163
Net Applied Bolt Normal Stress		-25818	-25816	-25897	-26054	-26277	-26551	-26856
Load Bending Stress Maximums (psi)		4078	5111	5795	6085	5959	5428	4527
JOINT SLIPPING (IF > THAN 1)		0.16	0.20	0.22	0.23	0.23	0.20	0.17
Safety Factor		6.33	5.05	4.47	4.28	4.41	4.89	5.93

WORKSHEET FOR THE CALCULATION OF BOLT STRESSES, STRESS AREA, LENGTH OF ENGAGEMENT, AND J FACTOR FOR CLASS 2A SCREW THREADS

INSERT NOMINAL SCREW DIAMETER IN BOX	0.75
INSERT THE THREADS PER INCH IN BOX	10
INSERT THE WORD "COARSE" OR "FINE" IN BOX	COARSE
INSERT THE U.T.S. OF SCREW IN BOX (in psi)	280000
INSERT THE U.T.S. OF TAPPED MATERIAL (in psi)	85000

SEE RESULTS BELOW.....

RESULTS

	DATA	
THE STRESS AREA:	0.3265677	in^2
REQ,D LENGTH OF ENGAGEMENT:	1.2485835	in
THE "J" FACTOR (see note below):	2.3196324	
MAX. LOAD ON THREADED SECTION:	91438.968	Pounds

(Note: if the J factor is > than 1, then the RESULTS length has been factored by an amount "J" x Le; so the internal thread will not stripout)

ESMIN.	DSMIN.	ENMAX.	KNMAX.	Length E
0.6773	0.7353	0.6927	0.663	0.5382678

AS	AN
0.6531355	0.9275199

Section 4. Bolted Joint Tests

Summary

Presented are the results from a series of single bolt joint tests performed in the Materials Development Laboratory Instron. Grade 5 and Grade 8 bolts were tested as well as the special high strength bolts to provide data for lower strength bolts, and provide means to experimentally confirm the understanding of the joint.

The high strength bolts have an average slip load of 14,700 lbs, and none of the joints slipped below 11,500 lbs. Lubricating the bolt before assembly provides a joint with, at full preload, a slip load of 18,000 lbs.

BOLT TESTS

A TEST SETUP SIMULATING THE EM/FIXTURE BOLT GEOMETRY, INCLUDING SPACERS, WAS MADE AND USED IN THE INSTRON IN THE MAL.

GRADE 5, GRADE 8, AND HIGH STRENGTH (230 ksi YIELD) BOLTS WERE TESTED TO DESTRUCTION. THE 5 HIGH STRENGTH BOLTS TESTED WERE RANDOMLY SELECTED FROM THE ORDER.

PLOTTED IS THE LOAD AT WHICH THE JOINT FIRST STARTS TO SLIP, NOT THE ULTIMATE FAILURE POINT.

LUBRICATING THE BOLT BEFORE INSERTION SIGNIFICANTLY RAISED THE INITIAL SLIP POINT, BY INCREASING THE BOLT PRELOAD (REDUCING THE FRICTION FACTOR).

JEH

6-25-97

BOLT LOAD TEST

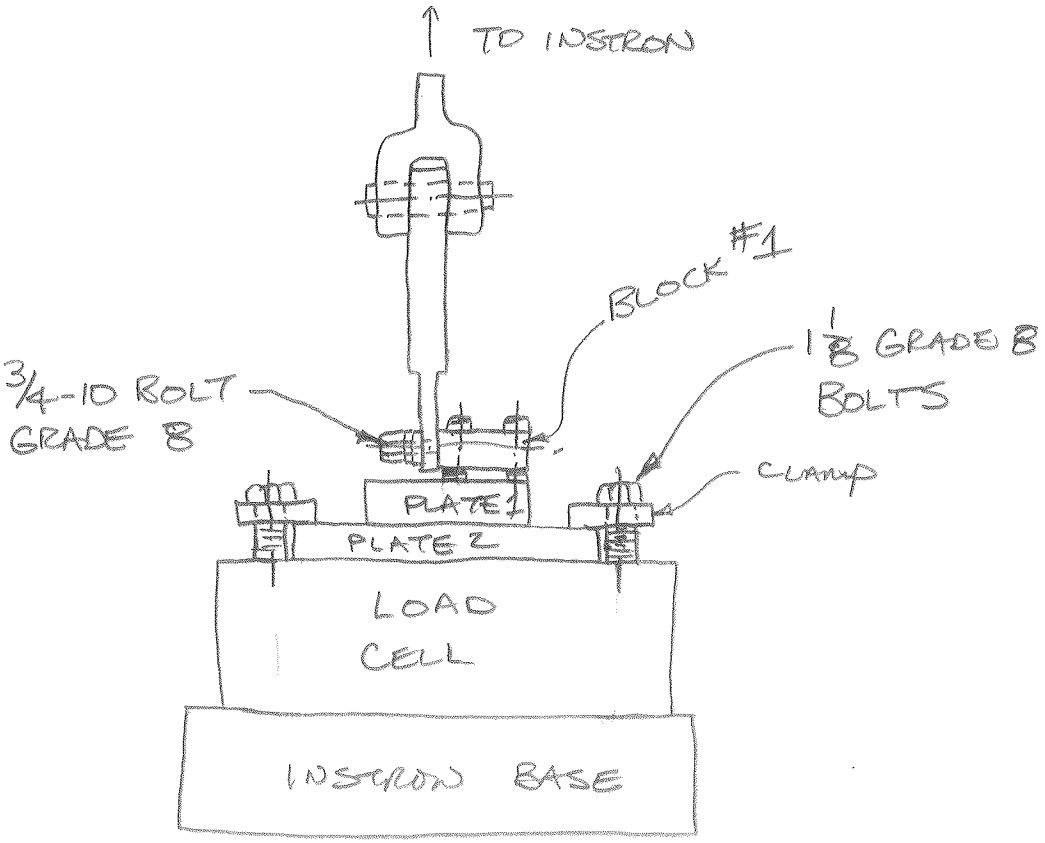

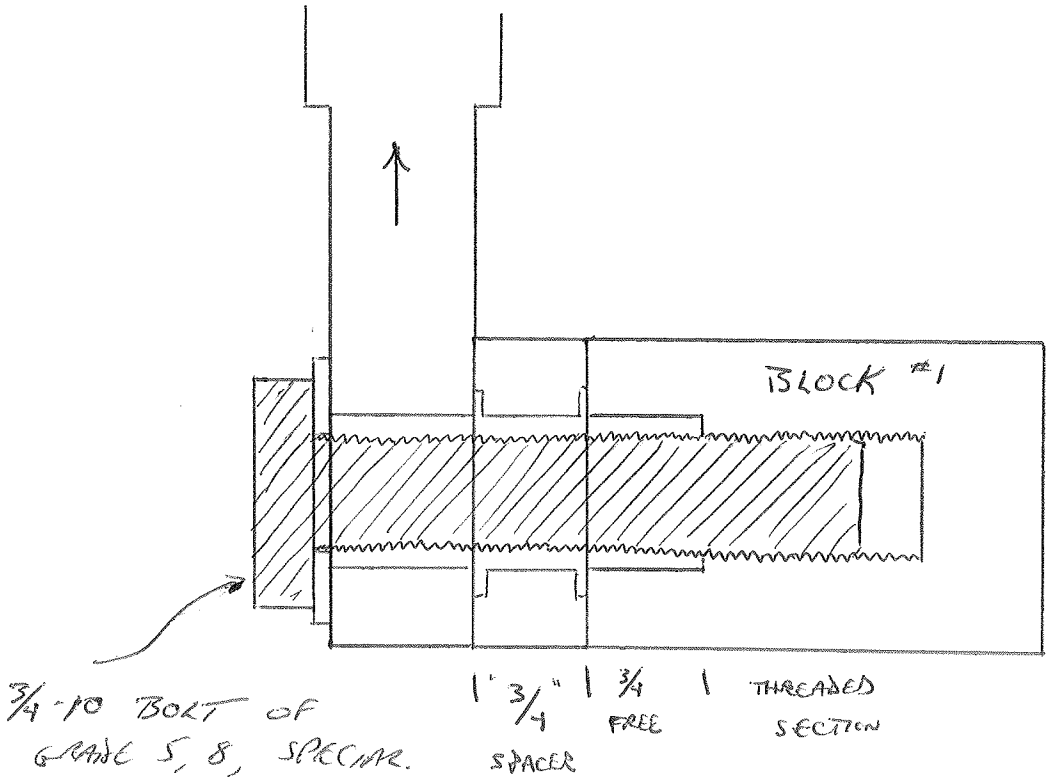

INSTRON SET UP IS IDENTICAL TO THAT THROUGH THE 4 CENTER BOLTS (OF THE 12 ON THE FIXTURE).

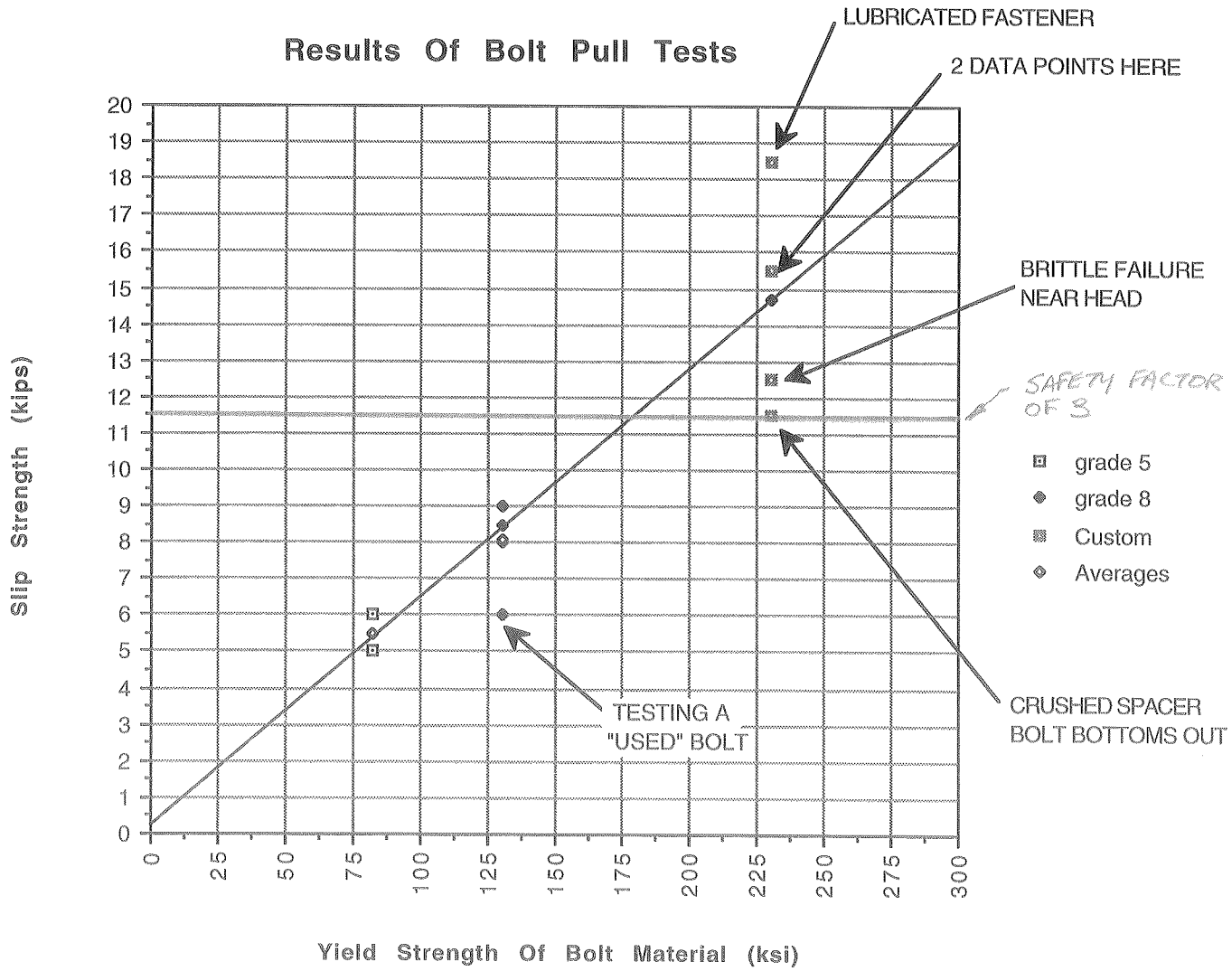

y = 0.18882 + 6.2746e-2x R^2 = 0.998

Tensile test - Eric 1

08/15/97

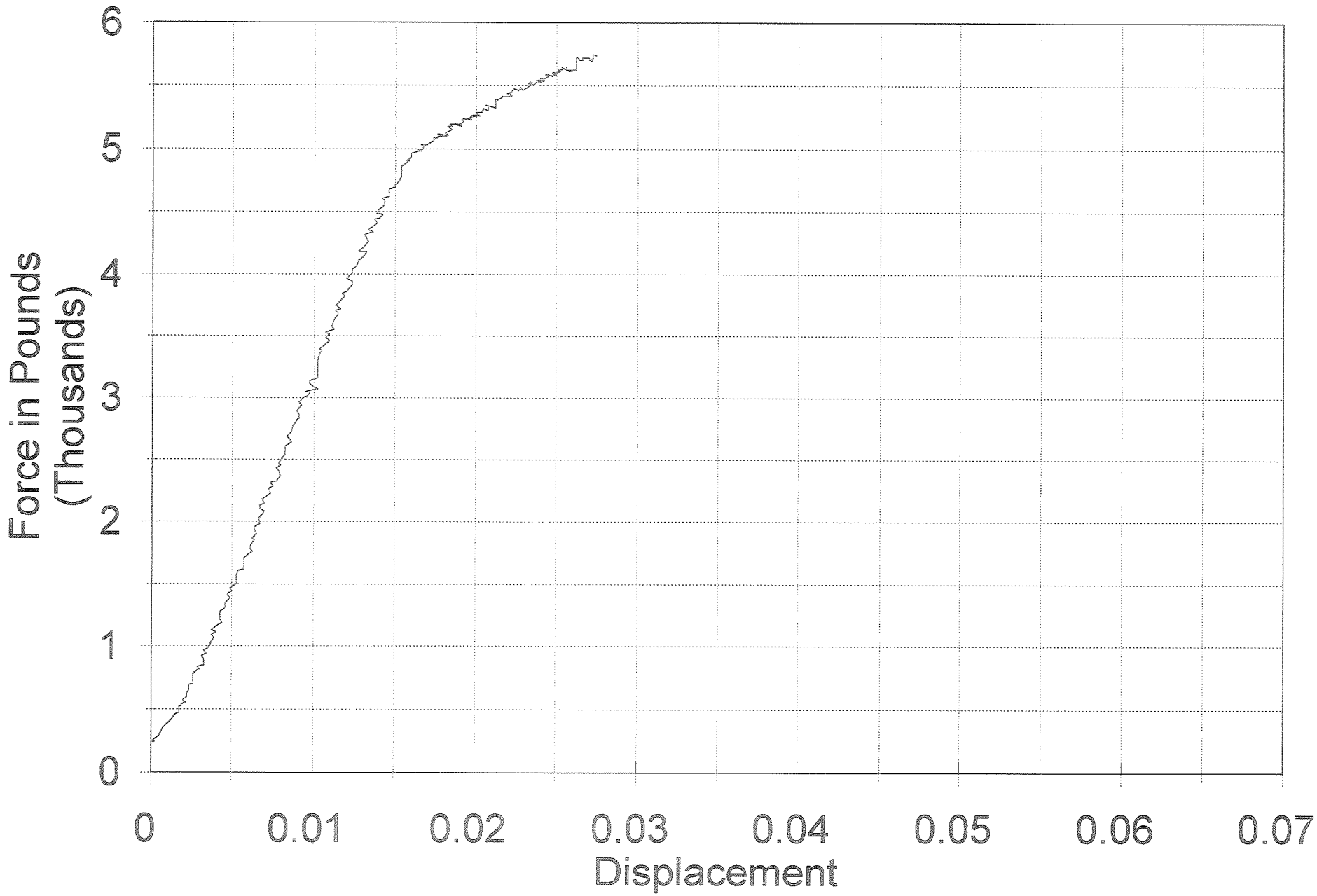

6 inches

Tensile test - Eric 2

08/15/97

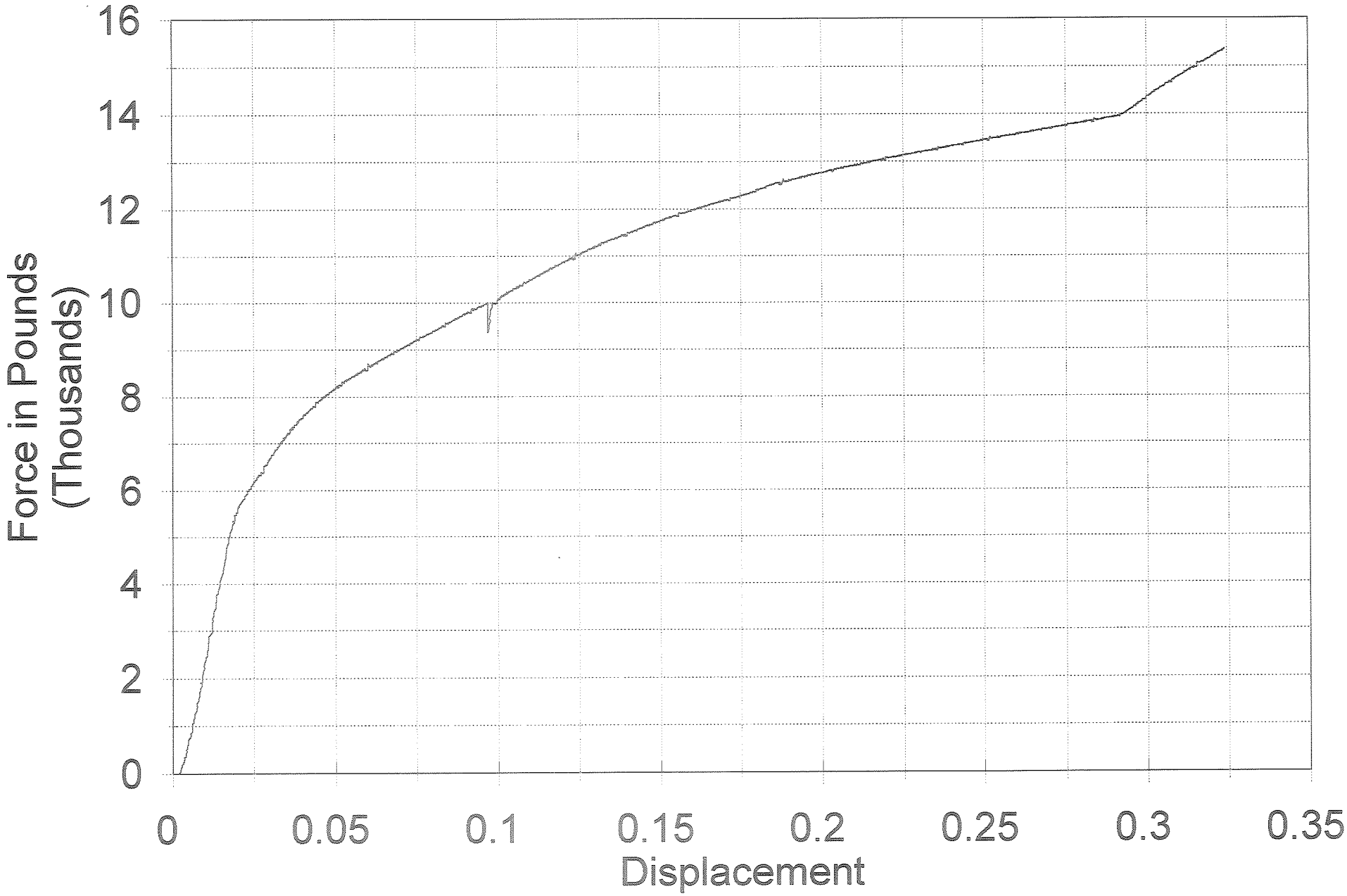

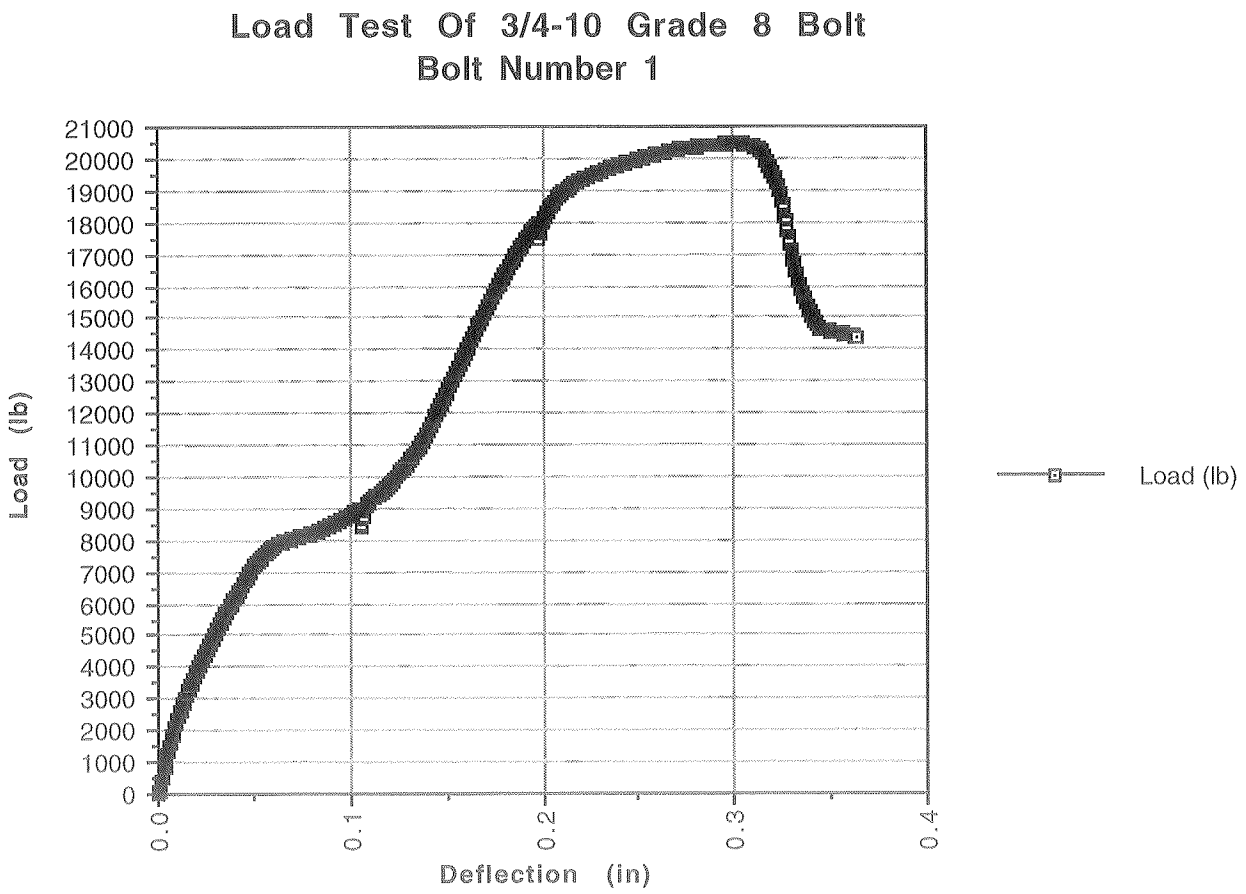
Load Test Of 3/4-10 Grade 8 Bolt
Bolt Number 1
Load (lb)
21000
20000
19000
18000
17000
16000
15000
14000
13000
12000
11000
10000
9000
8000
7000
6000
5000
4000
3000
2000
1000
0
0.0
0.1
0.2
0.3
0.4
Deflection (in)
Load (lb)

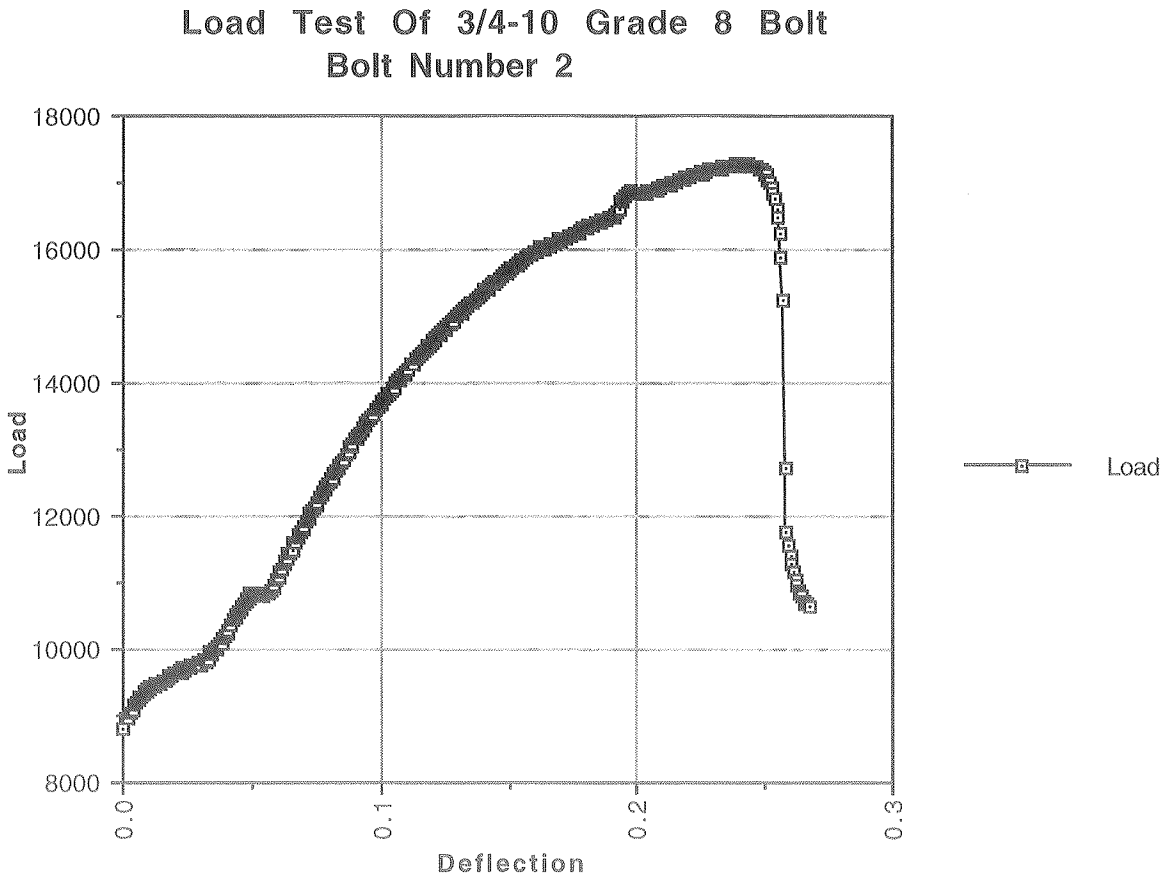
Load Test Of 3/4-10 Grade 8 Bolt
Bolt Number 2
18000
16000
14000
12000
10000
8000
Load
0.0
0.1
0.2
0.3
Deflection
Load

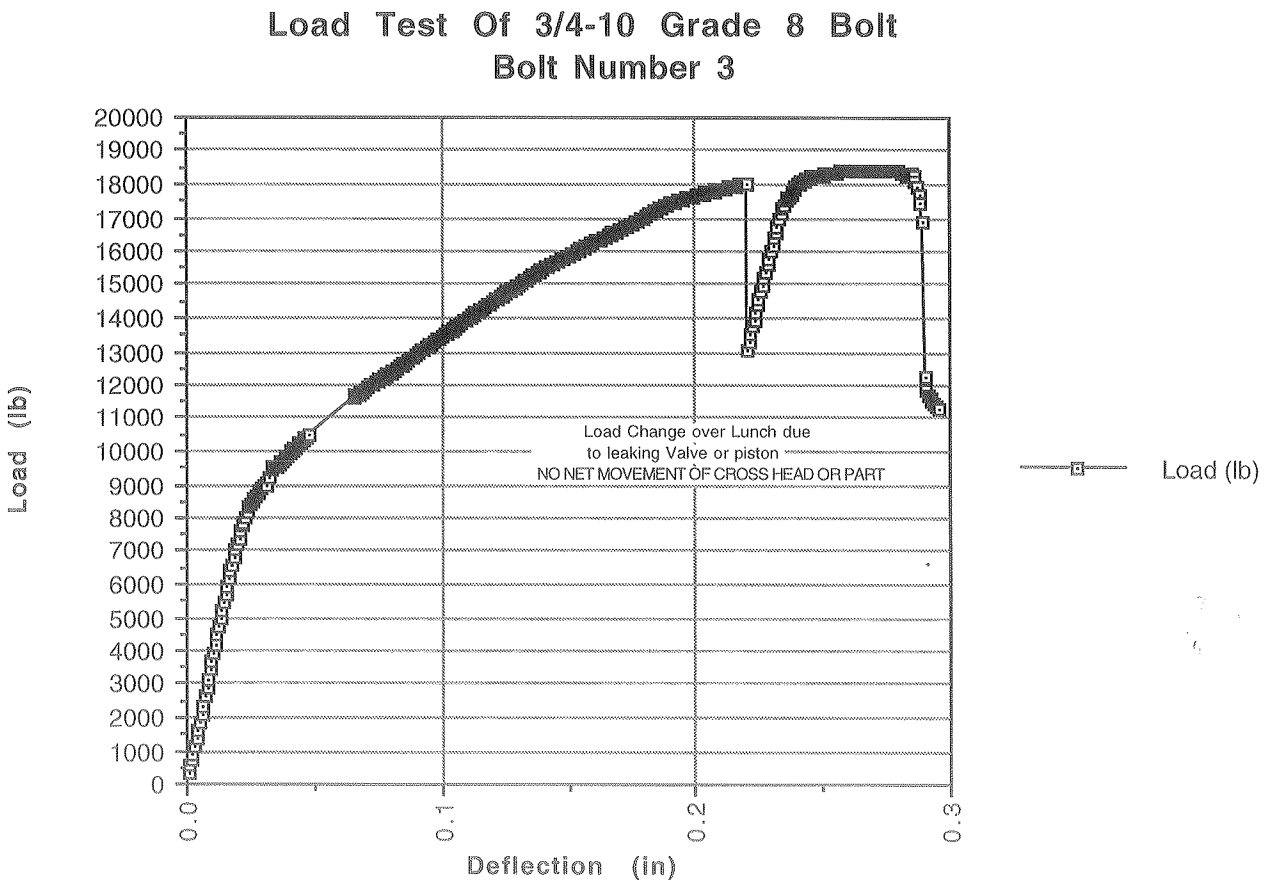
Load Test Of 3/4-10 Grade 8 Bolt
Bolt Number 3
Load (lb)
20000
19000
18000
17000
16000
15000
14000
13000
12000
11000
10000
9000
8000
7000
6000
5000
4000
3000
2000
1000
0
0.0
0.1
0.2
0.3
Deflection (in)
Load Change over Lunch due
to leaking Valve or piston
NO NET MOVEMENT OF CROSS HEAD OR PART
Load (lb)

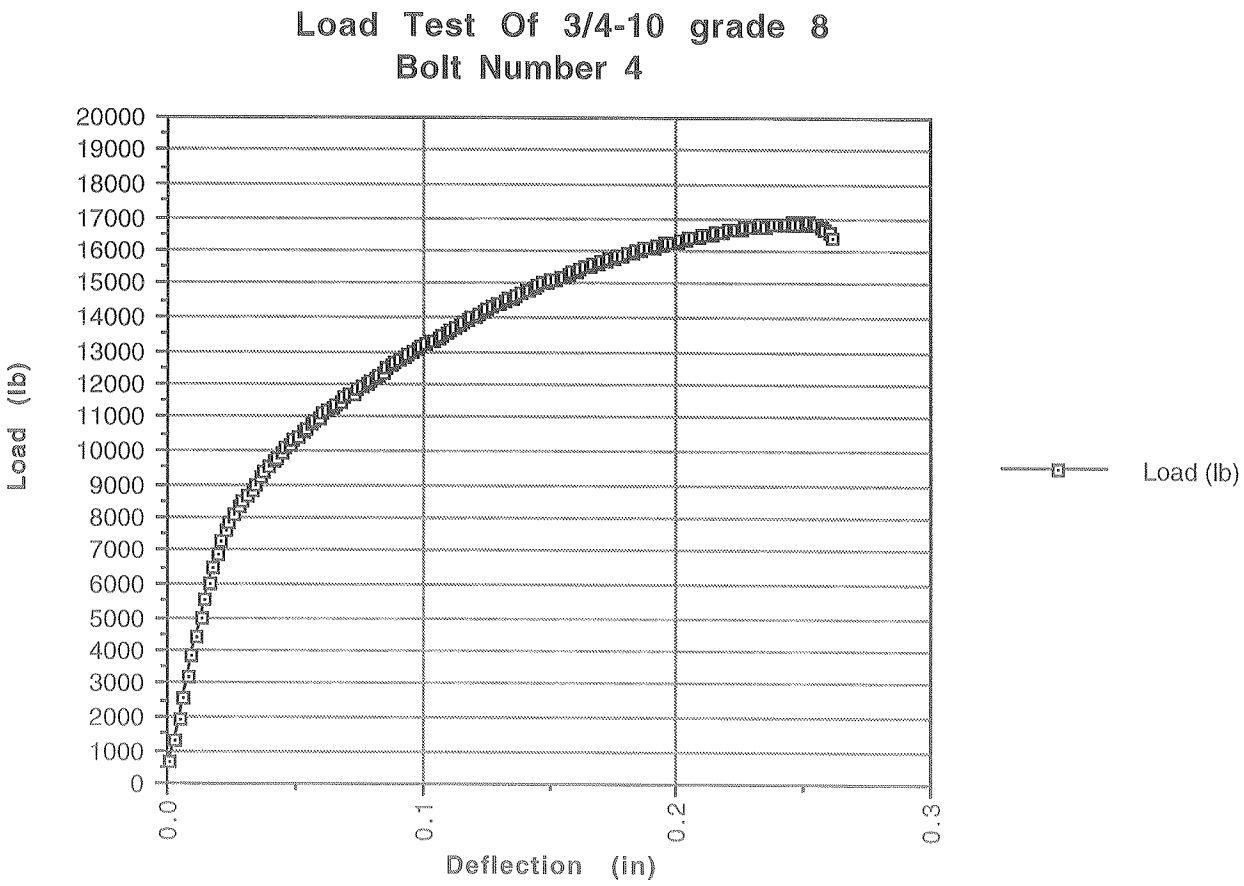
Load Test Of 3/4-10 grade 8
Bolt Number 4
Load (lb)
20000
19000
18000
17000
16000
15000
14000
13000
12000
11000
10000
9000
8000
7000
6000
5000
4000
3000
2000
1000
0
0.0
0.1
0.2
0.3
Deflection (in)
Load (lb)

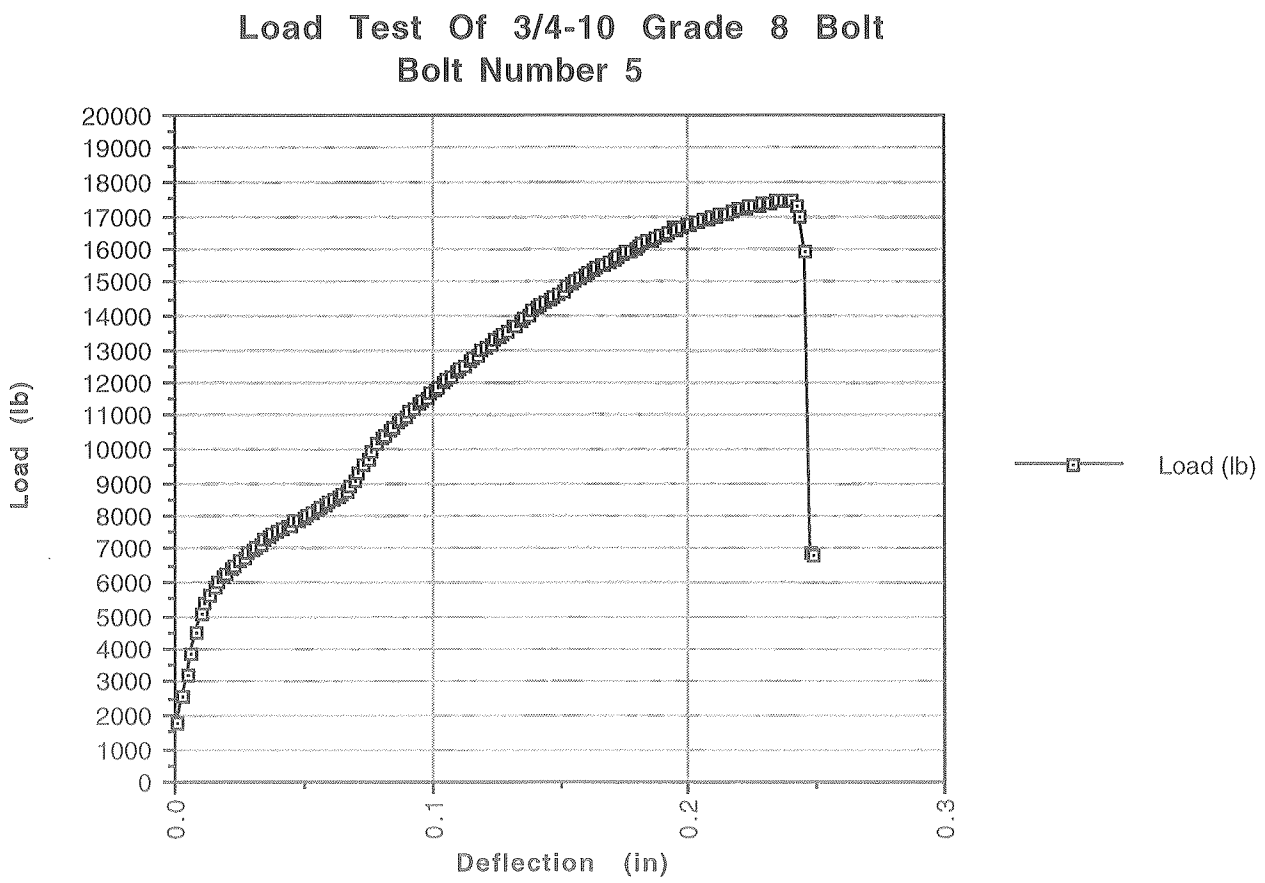
Load Test Of 3/4-10 Grade 8 Bolt
Bolt Number 5
Load (lb)
20000
19000
18000
17000
16000
15000
14000
13000
12000
11000
10000
9000
8000
7000
6000
5000
4000
3000
2000
1000
0
0.0
0.1
0.2
0.3
Deflection (in)
Load (lb)

Tensile test - Eric_A

08/26/97

SPECIMEN #1. CRUSHED SPACER

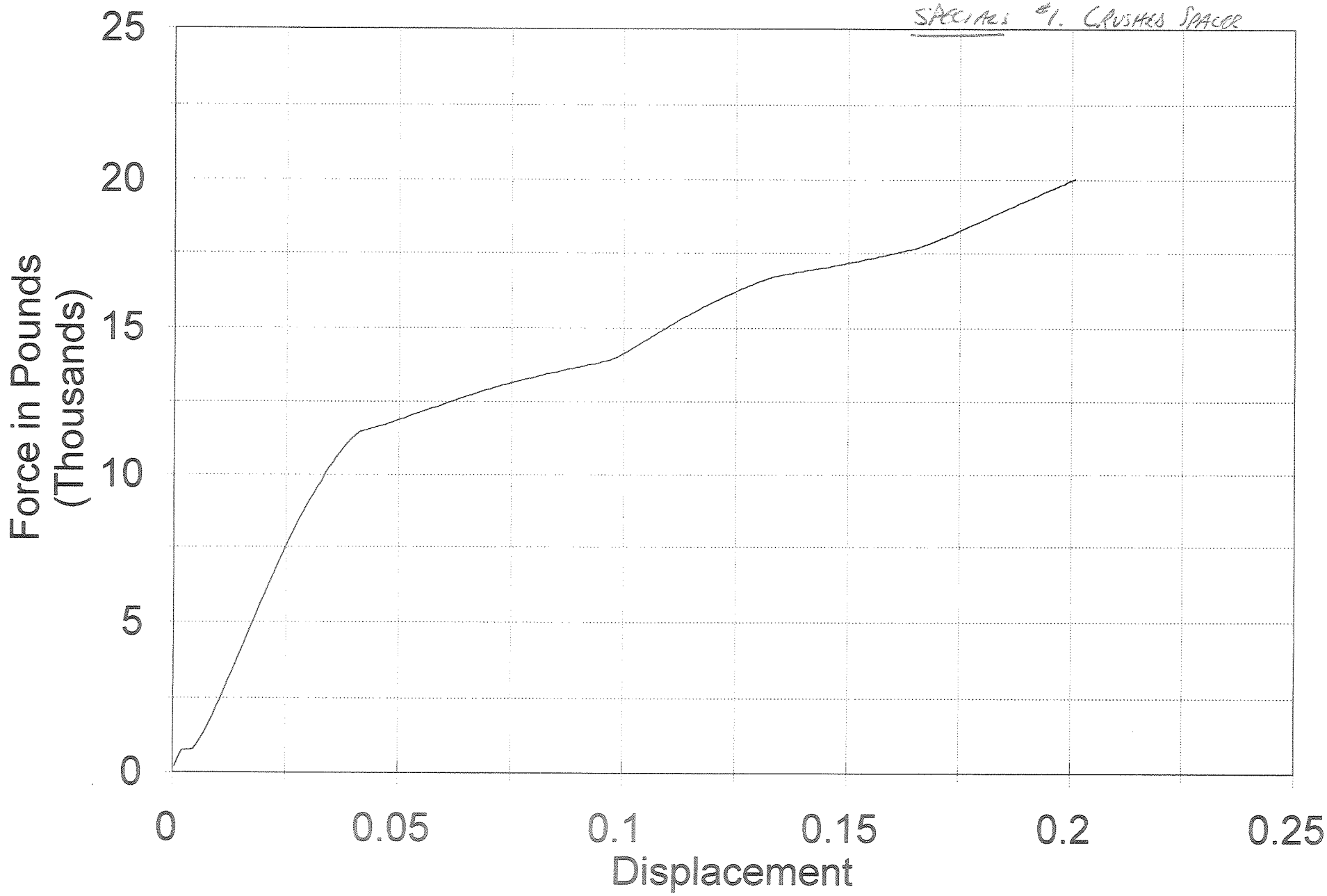

Tensile test - Eric_B

08/26/97

SPECIMEN #2

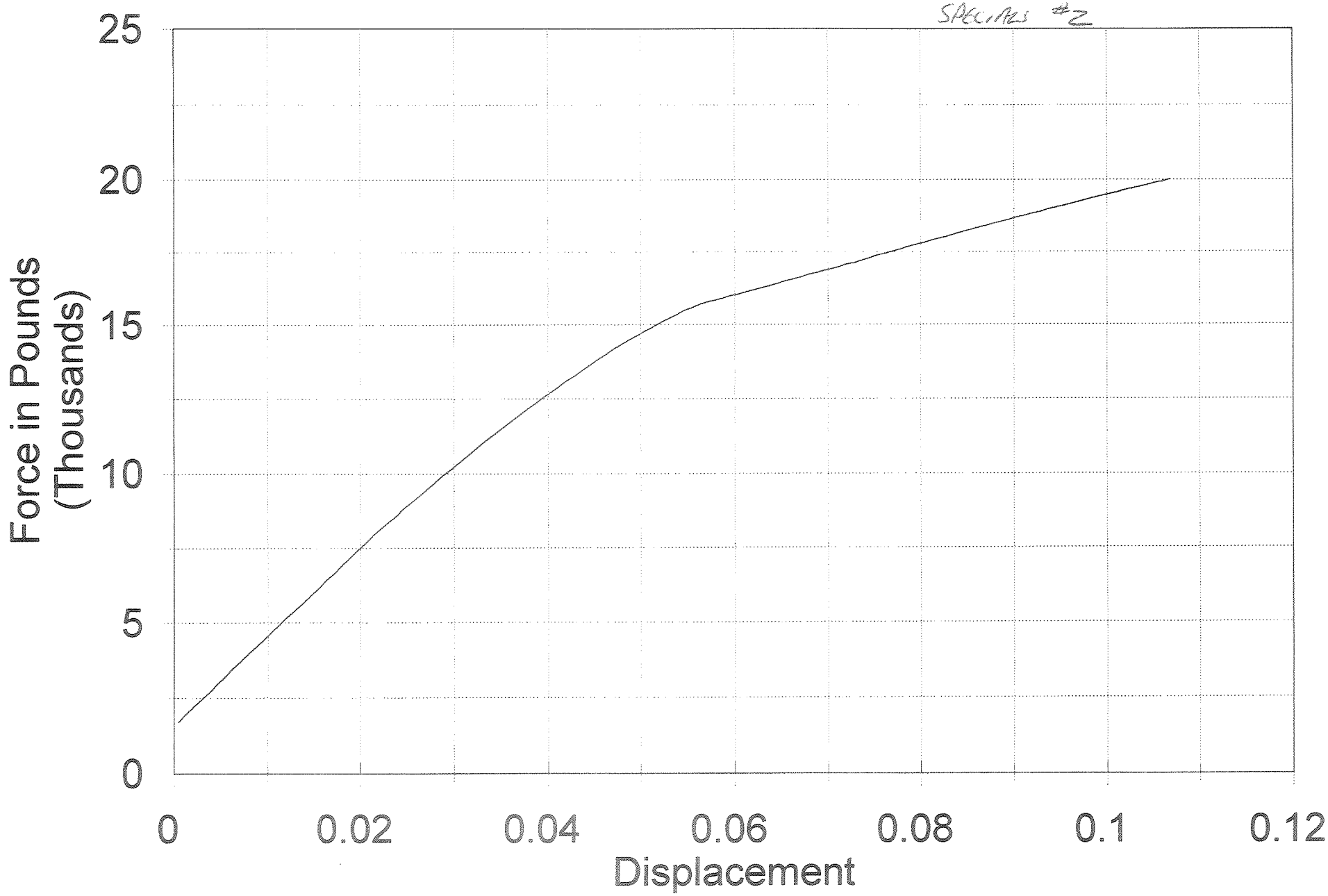

Tensile test - Eric_C

08/26/97

SPECIMEN #3

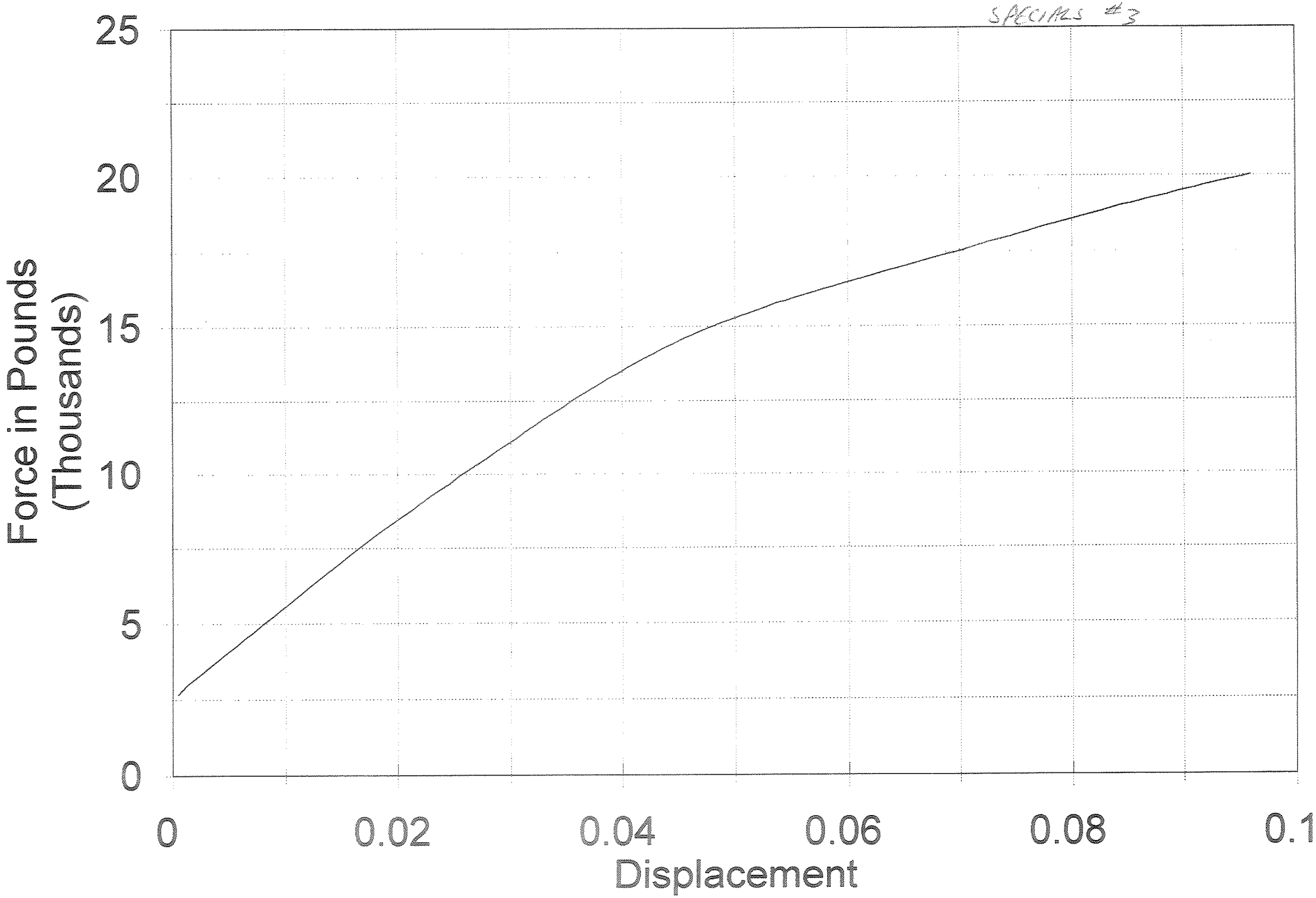

Tensile test - Eric_D

08/26/97

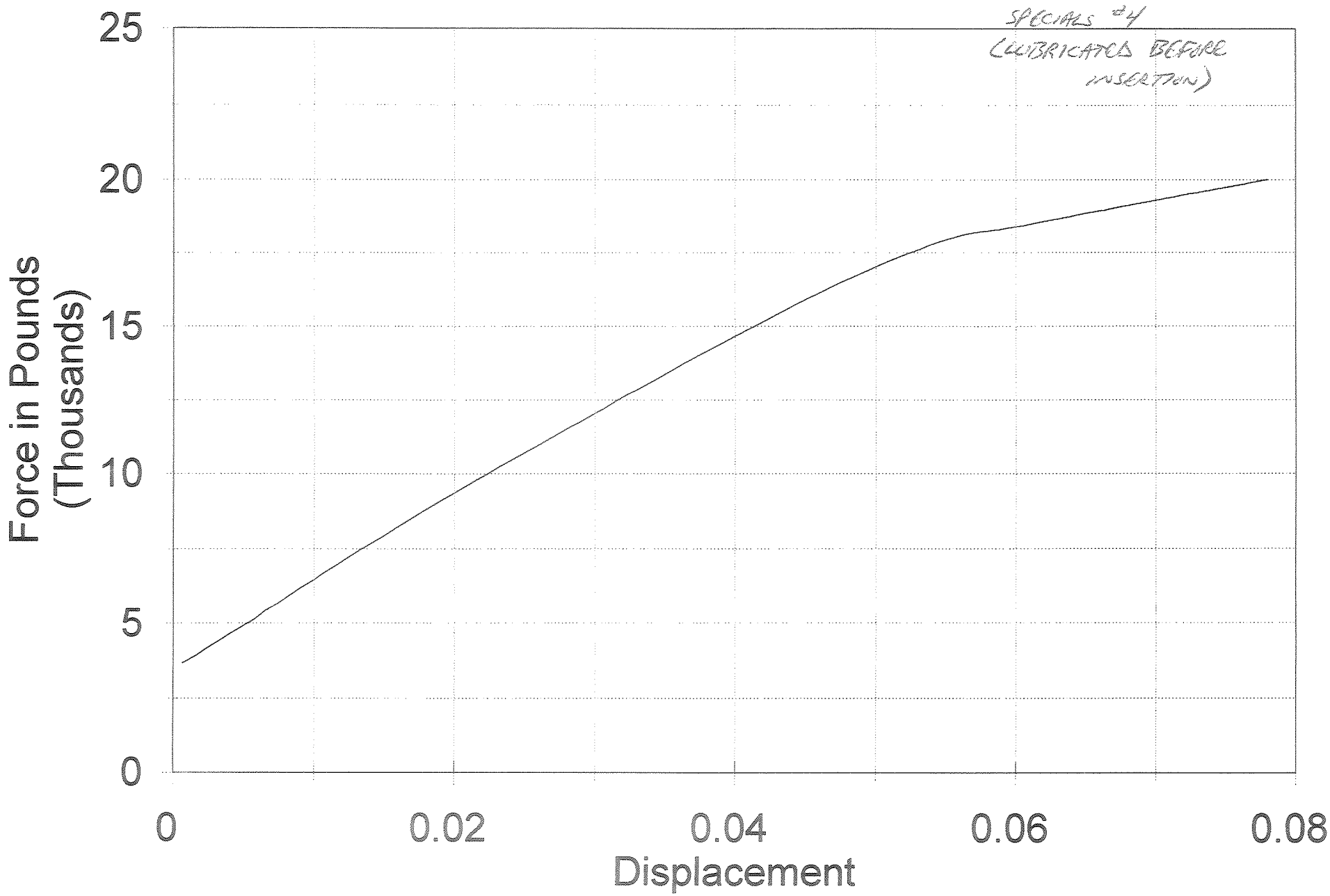

Tensile test - Eric_E

08/26/97

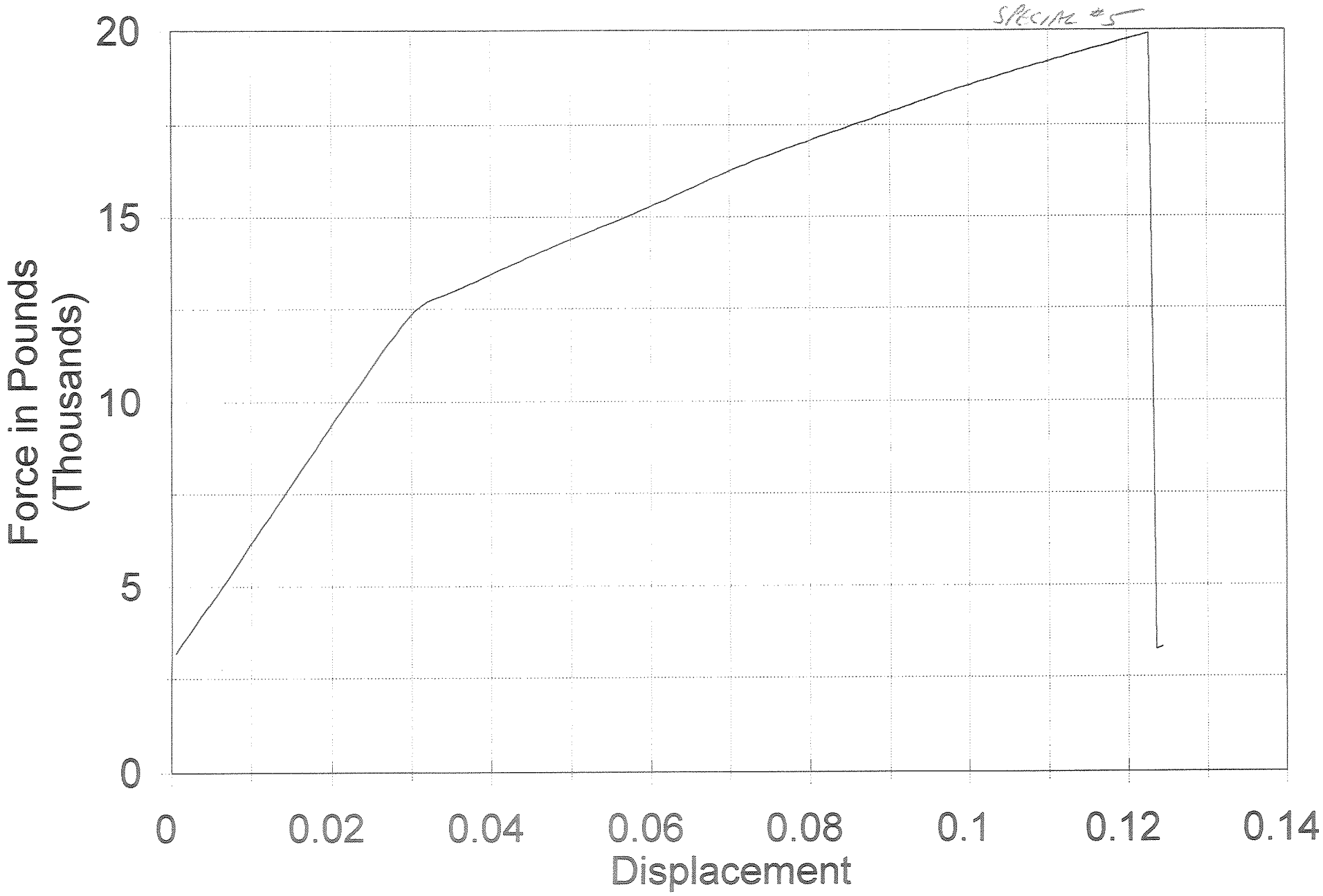

Cordova Bolt, Inc.

5601 DOLLY AVENUE
BUENA PARK, CA 90621
(714) 739-7500

PAGE	ORDER NUMBER
1	334499-00

08/12/1997 13:41 714-994-2912 CORDOVA BOLT PAGE 01

SOLD TO: 2976
E - F MISCELLANEOUS - COD
C.O.D./ C.O.D./ C.O.D./
.O.D./ C.O.D./ C.O.D./
CA

INVOICE TO:

SHIP TO:
FERMI LAB-PROCARD REC.DEPT.
KIRK&WILSON STREETS-184
REQUESTER:RON EVANS
BATAVIA IL 60510

OPR.	SLS	CONTACT	TERMS	DEPOSIT	DATE SHIPPED	TOTAL FREIGHT
TM	25	R.EVANS	*COD CASH ONLY*			

P.O. NUMBER	DATE OF ORDER	DATE WANTED	VIA	SHIP VIA	FREIGHT TERMS
EE BELOW	07/29/97	08/08/97	WAREHOUSE	Email direct ~~UPS ON OR BEFORE~~	PPD & CHARGE

ITEM NUMBER DESCRIPTION	LINE	QTY ORD	QTY SHPD	QTY B.O.
PO# FERMI-REQ29-DEL/LOC:7184				
3/4-10" X 3-3/4 HEX HEAD	08/08/97	001	24 PC	
OLTS W/2-1/2"MIN T.L.				
MATERIAL: HILTOOL H.T. TO 200 KSI YIELD				
PLAIN				
/N	08/08/97	002	1 PC	
SHIP VIA UPS 08/08/97 OR BEFORE				
ILLTEST	08/08/97	003	1 PC	
ILL-TEST REPORTS				

Bill Emery acct # 076 218163

RECEIVED BY

THIS PACKAGE MAY CONTAIN A MIXTURE OF DOMESTIC ARTICLES AND ARTICLES FROM ONE OR MORE FOREIGN COUNTRIES, INCLUDING THE FOLLOWING: JAPAN, TAIWAN, KOREA, CHINA & CANADA

FILLED BY	CHECKED BY	KEGS	CARTONS	WEIGHT

PKG. INVOICE

WALKER
BOLT Manufacturing Co.
P.O. Box 38502
Houston, TX 77238-8502
( )-448-4321

Customer : CORDOVA BOLT INC
Customer PO # : M98446
Sales Order # : 51940
Date : 08/12/1997

Item	Quantity	Description
A	24	3/4" (10) X 3-3/4" HEX BOLT

Customer Part # : Lot # : 51940-A Heat Code :
Specification : H-11 TOOL STEEL

Heat #	C	Mn	P	S	Si	Ni	Cr	Mo	V
25097-13	.42	.32	.015	.002	.95	.11	4.99	1.28	.43

Tensile	Lab #	Tensile PSI	Yield PSI	% Elong.	R.A. %
	TR21298	283,367	234,086	10.3	46.4

Hardness
555 HBS

STATE OF TEXAS
COUNTY OF HARRIS
Subscribed and sworn to before me
this 14 day of August, 1997.
Carla D. Gamble
Notary Public in and for Texas

This test report may NOT be reproduced except in full without the written approval of WALKER BOLT Mfg Co.
I certify the above results to be correct as contained in the records of the Company.
Tommie D. Helms QA/QC Manager

JEH

9-3-97

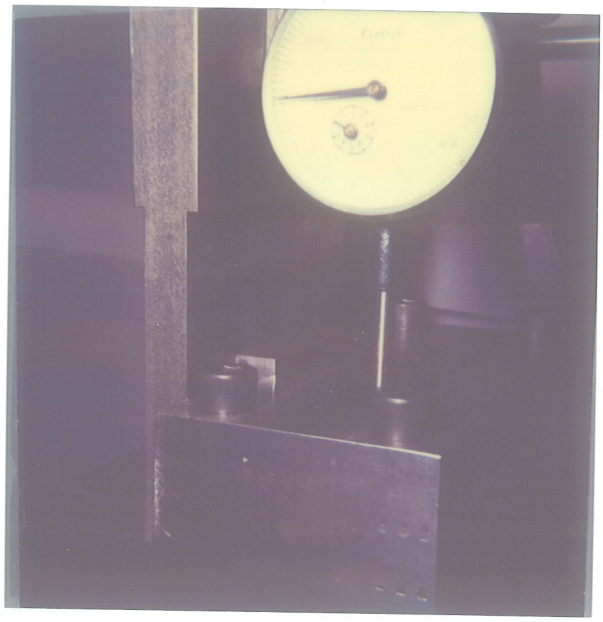

SPACER SLIPPING

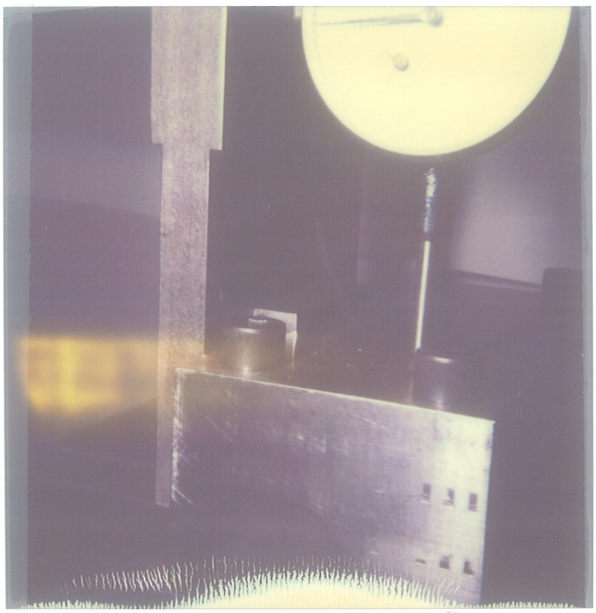

SPACER SLIPPING

Section 5. Lifting Line Loads

Summary

This section documents the needed line loads to rotate the assembled EM and Lifting fixture. The total load needed is less than 1 ton. The fixture provides 4 lines, each rated at 1.5 tons minimum, to accomplish this task. We have done a rigging walk through of the lifting fixture and the proposed rigging (without the EM attached), to show that the proposed scheme is feasible.

JEH

10-7-97

WEIGHT OF THE LIFTING FIXTURE

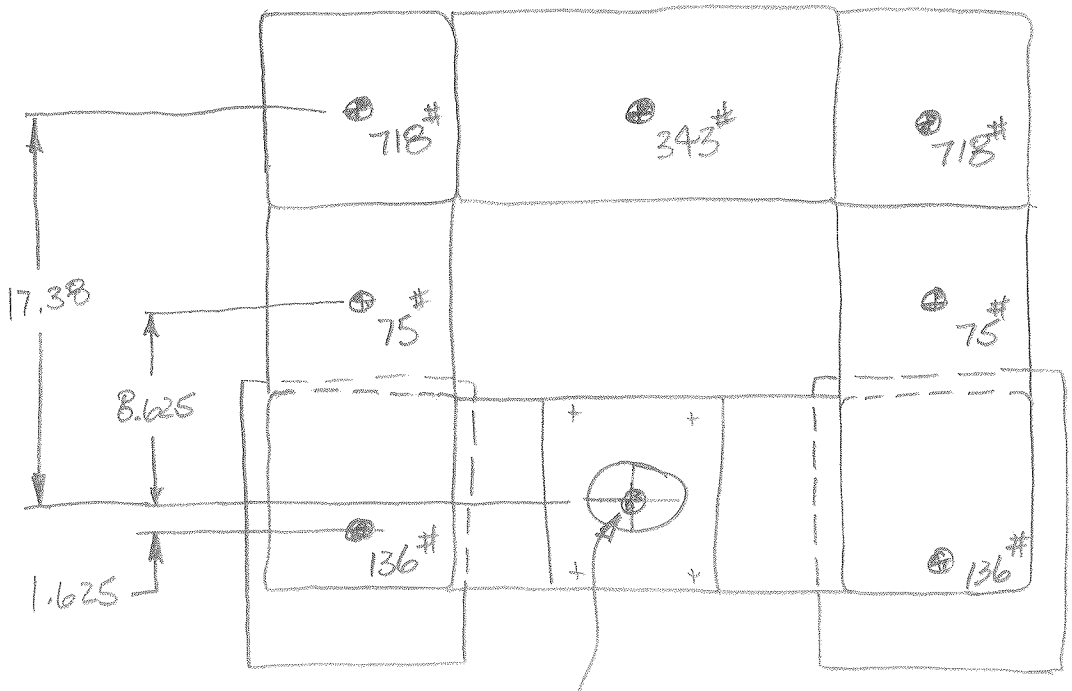

SHAFTS 35#
PLATES 60#
CHANNEL 50#
} 145#
TUBES 201#

343
718
718
150
212
201
35
60
50
2550#

Actual weight
(as weighed) 2800 lbs

LINE LOADS :

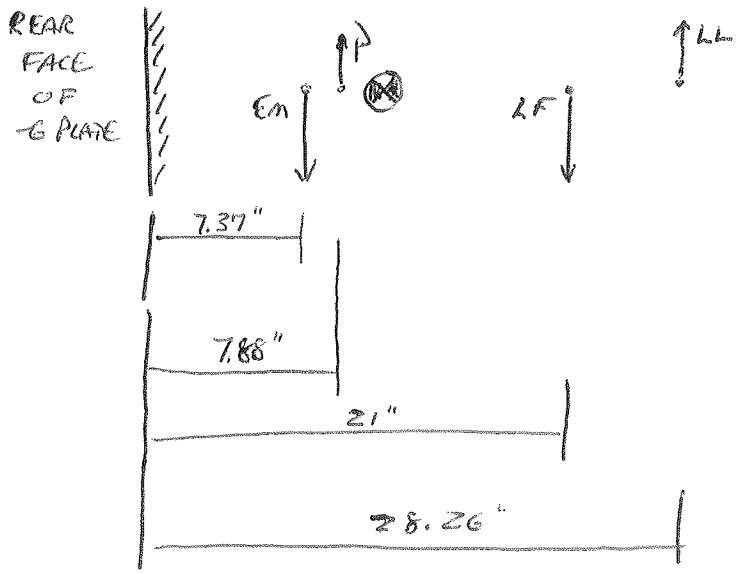

EM = 26,000 LBS

LF = 2,800 LBS

THE CG OF THE COMBINED EM AND LIFTING FIXTURE IS

$$\frac{26000(7.37) + 2800(21)}{26000 + 2800} = 8.70''$$

OR 0.82" FORWARD OF THE PIVOT.

FOR STATIC EQUILIBRIUM WHEN THE EM IS VERTICAL,

$$-(26000)(7.37) + P(7.88) - 2800(21) + LL(28.26) = 0$$

$$-260000 + P - 2800 + LL = 0$$

$$P + LL = 28,800$$

$$7.88P + 28.26\,LL = 250,420$$

$$7.88(28{,}800 - LL) + 28.26\,LL = 250420$$

$$20.38\,LL = 23476$$

$$LL = 1152 \text{ LBS}$$

THIS IS THE LOAD TO BE CARRIED BY THE SUM OF ALL FOUR LINES.

THE WORST CASE ANGLE OF ONE OF THESE LINES IS LESS THAN 15°, SO THE GEOMETRY MULTIPLIER IS SMALL $\left(\frac{1}{\cos 15^\circ} = 1.035\right)$

IN THE DYNAMIC CASE, THE WORST CASE LOAD EXISTS WHEN ATTEMPTING TO ROTATE THE EM FROM VERTICAL BACK TO HORIZONTAL, DUE TO FRICTION.

USE $\mu_s = 0.2$

RADIUS OF PIVOT = 2.5"

ΣM ABOUT EM/FIXTURE CG:

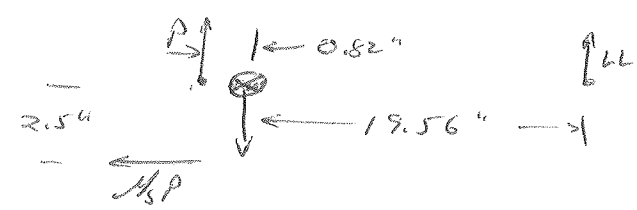

$$LL(20.38 - 0.82) + P(-0.82) - \mu_s P(2.5) = 0$$

$$P + LL = 28800$$

$$19.56\,LL = 1.32\,P$$

$$14.82\,LL = P$$

$$15.82\,LL = 28\,800$$

$$LL = 1821 \text{ LBS}$$

WE HAVE ALREADY DONE A RIGGING WALK THROUGH WITH JUST THE LIFTING FIXTURE.

SETTING CM = 0 IN THE PREVIOUS CALCULATIONS,

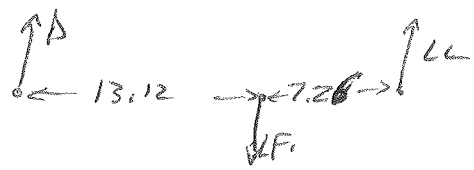

ΣM about LF

$$-P(13.12) + 7.26\,LL = 0$$

$$P = 0.55\,LL$$

$$P + LL = 2\,800$$

$$1.55\,LL = 2\,800$$

$$LL = 1806 \text{ LBS}$$

JUST AS BIG AS THE WORST CASE LOAD CALCULATED FOR MOVING THE CM ABOVE

Section 6. Load Testing Procedure of the Lifting Fixture Weldment

Summary

This section describes load testing of the fixture which occurred on 11-3-97 and describes some of the hardware used to accomplish this task. Weld inspections from after this test are included.

On 1/15/98, the load test was repeated using exactly the hardware proposed for the final use. The procedure was also modified to complete the loading to 125% of 15tons for two instances, three times with all 12 bolts attached, and 3 times with only 8 bolts attached, with the center bolt of each connection removed. Weld inspection from after this test are included.

10-30-97

TEST PROCEDURE FOR THE CDF EM LIFTING FIXTURE

Eric Haggard TD/Engr. & Fab.

PROCEDURE COMPLETED 11-3-97!

Em Lifting Fixture Assembly is described in Fermilab Dwg. Number 2563.52-ME-332555

Em Lifting Fixture Test Frame is described in Fermilab Dwg. Number 2563.52-ME-332592 & 618.

Additional Items Required to Complete this Procedure

- Quantity of 12 special high strength bolts 3/4-10. See Engineering Note for description and specifications.
- Torque Wrench or wrenching system capable of 600 ft-lb
- 2 hydraulic hand pumps with pressure gages.
- The Crane and slings capable of lifting 2600 lbs.
- This document

GENERAL PROCEDURE FOR TESTING OF THE LIFTING FIXTURE

1. Layout test fixtures as shown in 2563.52-ME-332617 and fasten to the assembly table using c-clamps.
2. Sling the EM lifting fixture and move to the test stands.
3. Bolt the lifting fixture to the test stands using the provided High strength bolts.
4. Torque to 600 ft-lb.
5. Install Pivot cylinders and pusher rods as per 2563.52- ME -332592 and 2563.52-ME-332592.
6. Install the hand pumps to the hydraulic cylinders.
7. Follow the Load steps listed in the table bellow allowing the fixture to remain at each step for a minute before proceeding to the next step.
8. Repeat Load step sequences 3 times.
9. After the test is complete, dye penetrant check the lifting fixture welds in accordance with AWS B2.1-84 Appendix F procedure. If cracks are found, have the fixture repaired and repeat this procedure.

Rotation Angle	Pressure Vertical	Force	Pressure Horizontal	Force
0	3750 psi	18750 lb	0	0
15	3622 psi	18748 lb	970 psi	4788 lb
30	3247 psi	16021 lb	1875 psi	9250 lb
45	2652 psi	13081 lb	2652 psi	13081 lb
60	1875 psi	9250 lb	3247 psi	16021 lb
75	970 psi	4788 lb	3622 psi	18748 lb
90	0	0	3750 psi	18750 lb

Tolerance + 20 psi/ - 0 psi

Cycle 1
0 → 90° → 0
9:30 complete

This Procedure was executed by Eric Haggard 11-3-97

This Procedure was witnessed by Dan Eichin 11-3-97

Cycle 1
0° — 90° → 0° Complete at 9:30
Cycle 2
0° → 90° → 0° Complete at 9:50
Cycle 3
0° → 90° → 0° Complete at 10:18

LOAD - DEFLECTION

LOAD	DEFLECTION	
0	.625	
1000 psi	.750	
2000 psi	.781	
3000 psi	.905	$7/8 + \frac{1}{32}$
3750 psi	15/16	

cylinder tunnel

LOAD TESTING 11-3-97

PRESSURE GAGE AT 3306 psi
CORRESPONDS TO ≈ 16,000 lb LOAD.

PRESSURE GAGE AT 3756 psi
18,750 POUND LOAD

LOAD TESTING 11-3-97

LIFTING FIXTURE AT MAB

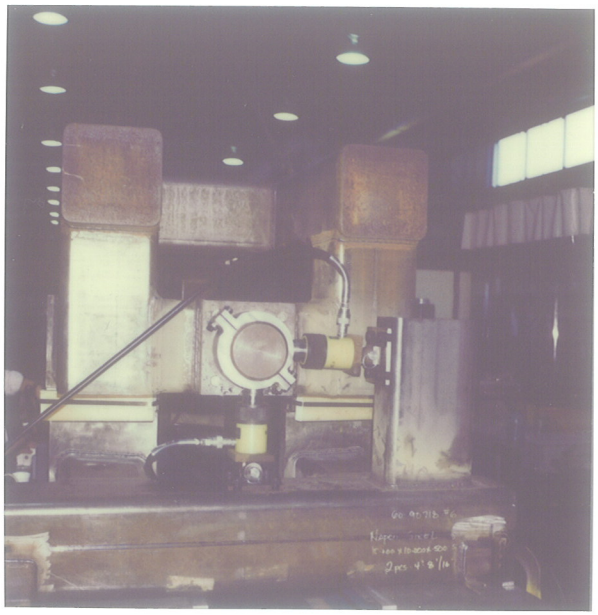

PIVOT POINT CYLINDERS

HAND PUMPS

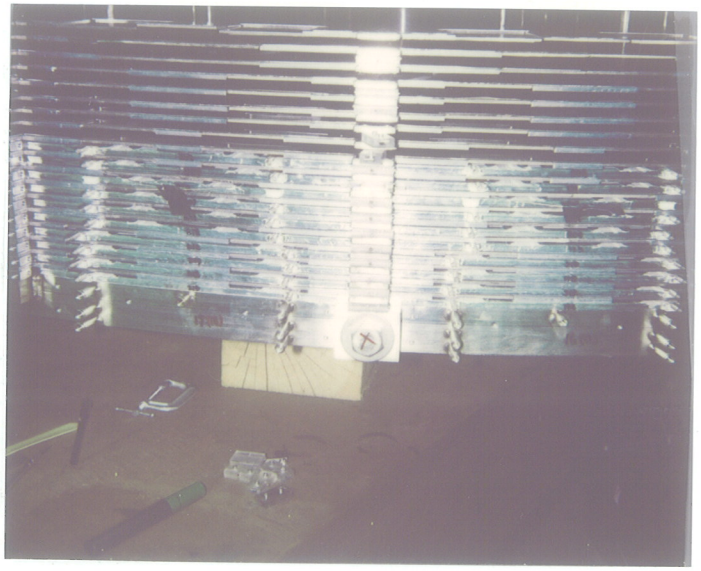

EM MOUNT POINT

COPY

"ORIGINALS"

7-29-97
11/3/97
11/4/97

TO: DON CARPENTER
&
DAVE ERICKSON

FROM: ERIC HAGGARD

WELDING SPEC.

5 PAGES
+ COVER

7-29-97

X-5746

	E.R. #6102	

1. SCOPE
THIS SPECIFICATION COVERS WELDS FOR 2563.52-ME-332556 FOR JOINING OF A500 GRADE B STRUCTURAL STEEL TO 4140 CARBON STEEL AND ALL MILD STEEL WELDS AS DESCRIBED IN DRAWING NUMBER ME-332556

2. MANDATORY REQUIREMENTS

2.1
ALL WELDING JOINTS SHALL BE CLEANED OF SURFACE SCALE AND IMPERFECTIONS BY GRINDING OR MACHINING PRIOR TO WELD

2.2
ALL WELDING ELECTRODES (E-7018 AND 12018-M) SHALL BE STORED IN A ROD OVEN MAINTAINED AT 250 DEGREES FARENHEIT. ALL WELDING ROD EXPOSED TO THE ATMOSPHERE AND NOT USED WITHIN 2 HOURS AFTER BEING REMOVED FROM THE OVEN WILL BE DISCARDED.

2.3
ALL MILD STEEL WELDING SHALL BE DONE WITH AWS TYPE E-7018 ROD.

2.4
ALL 4140 STEEL TO A-500 STRUCTURAL STEEL WELDS SHALL BE WELDED WITH AWS TYPE 12018-M WELDING ROD.

2.5
ALL 4140 STEEL PLATES SHALL BE PREHEATED TO 450-550 DEGREES FARENHEIT BEFORE WELDING WILL OCCUR.

2.6
ALL 4140 STEEL PLATES SHALL MAINTAIN INTERPASS TEMPERATURES AT 450-550 DEGREES FARENHEIT.

2.7
ALL 4140 STEEL PLATES SHALL BE POST HEATED AT 600-650 DEGREES FARENHEIT BY WRAPPING WELDMENT WITH SUITABLE INSULATION FOR SLOW COOL DOWN TO PREVENT CRACKING

2.8
ALL WELDING SHALL BE DONE WITH STRINGER BEAD PASSES REMOVING WELD SLAG BEFORE STARTING NEXT PASS

2.9
ALL WELDS SHALL BE DYE PENETRANT TESTED IN ACCORDANCE WITH AWS B2.1-84 APPENDIX F

3. RECOMMENDED REQUIREMENTS

3.1
DOCUMENTATION OF THE WELD PARAMETERS MAY BE RECORDED IN ATTACHED PAGE ENTITLED 'WELDING PROCEDURE SPECIFICATION (WPS)' AND COPIED TO THE ENGINEER FOR INCLUSION IN PROJECT DOCUMENTATION

3.2
DOCUMENTATION OF THE DYE PENETRANT INSPECTION BY QUALIFIED INSPECTOR MAY BE RECORDED IN THE PAGE ENTITLED 'EXAMINATION OF WELDS' AND COPIED TO THE ENGINEER FOR ENCLUSION IN FOR INCLUSION IN PROJECT DOCUMENTATION

ITEM	PART NO.	DESCRIPTION OR SIZE	QTY.

PARTS LIST

UNLESS OTHERWISE SPECIFIED					
.XX	.XXX	ANGLES	ORIGINATOR	E. HAGGARD	7-97
			DRAWN	E. HAGGARD	7-97
±	±	±	CHECKED	R. HILLER	7/23/97
1. BREAK ALL SHARP EDGES .02 MAX.			APPROVED	E. HAGGARD	7/23/97
2. DO NOT SCALE DRAWING.			USED ON		
3. DIMENSIONS BASED UPON ANSI Y14.5M-1982					
4. MAX. ALL MACH. SURFACES			MATERIAL	ME-332556	

FERMI NATIONAL ACCELERATOR LABORATORY
UNITED STATES DEPARTMENT OF ENERGY

COLLIDER DETECTOR FACILITY
END-PLUG EM LIFTING FIXTURE
WELDING SPECIFICATION

SCALE	FILMED	DRAWING NUMBER	REV.
		2563.52-SA-332608	

CREATED WITH I-DEAS MS1.3b | USER NAME: HAGGARD

EXAMINATION OF WELDS

Project CDF END-PLUG LIFTING FIXTURE - FRAME WELDMENT

Quality requirements — section no.

Reported to

WELD LOCATION AND IDENTIFICATION SKETCH

DYE PENETRANT INSPECTION

2563-52-ME-332557

in ACCORDANCE WITH

AWS B2.1-84 APPENDIX F

Date	Weld Identification	Area	Interpretation		Repairs		Remarks
			Accept.	Reject	Accept.	Reject	

We, the undersigned, certify that the statements in this record are correct and that the welds were prepared and tested in accordance with the requirements of the American Welding Society ANSI/AWS D1.1, (_____) Structural Welding Code-Steel.
year

Inspector

Test date

Manufacturer or contractor

Authorized by

Date

Appendix F
Penetrant Examination Procedure

F1. General

This Appendix describes the method which shall be employed when liquid penetrant examination is specified in Section 2 or 3. This procedure is substantially in conformance with ASTM E165, *Recommended Practice for Liquid Penetrant Inspection*. Refer to this Standard for additional details.

F2. Method

A visible solvent removable penetrant shall be used.

F3. Procedure

F3.1 Cleaning. Cleanliness in this application shall be the removal of all rust, scale, welding flux, spatter, grease, oily films, water, dirt, etc., from the surface to be examined.

F3.2 Drying. The surface to be examined shall be allowed to dry for a minimum of 2 minutes prior to application of penetrant.

F3.3 Penetrant Application. The penetrant is applied by brushing or spraying. The penetration time shall be at least 5 minutes. The temperature of the surface to be examined, the liquid penetrant, the cleaner, and the developer shall not be below 40°F (5°C) nor above 125°F (52°C) throughout the examination period.

F3.4 Excess Penetrant Removal. After a minimum of 5 minutes penetration time has elapsed, any penetrant remaining on the surface shall be removed. Penetrants shall be removed from the surface by wiping with rags or cloths moistened with the solvent.

F3.5 After excess penetrant removal, the developer shall be sprayed on the surface to be examined. The developer coating shall be applied lightly and uniformly.

F4. Examination

It is recommended to conduct the examination 7 minutes or more after applying the developer. In no case shall the examination be made later than 30 minutes after the developer has been applied.

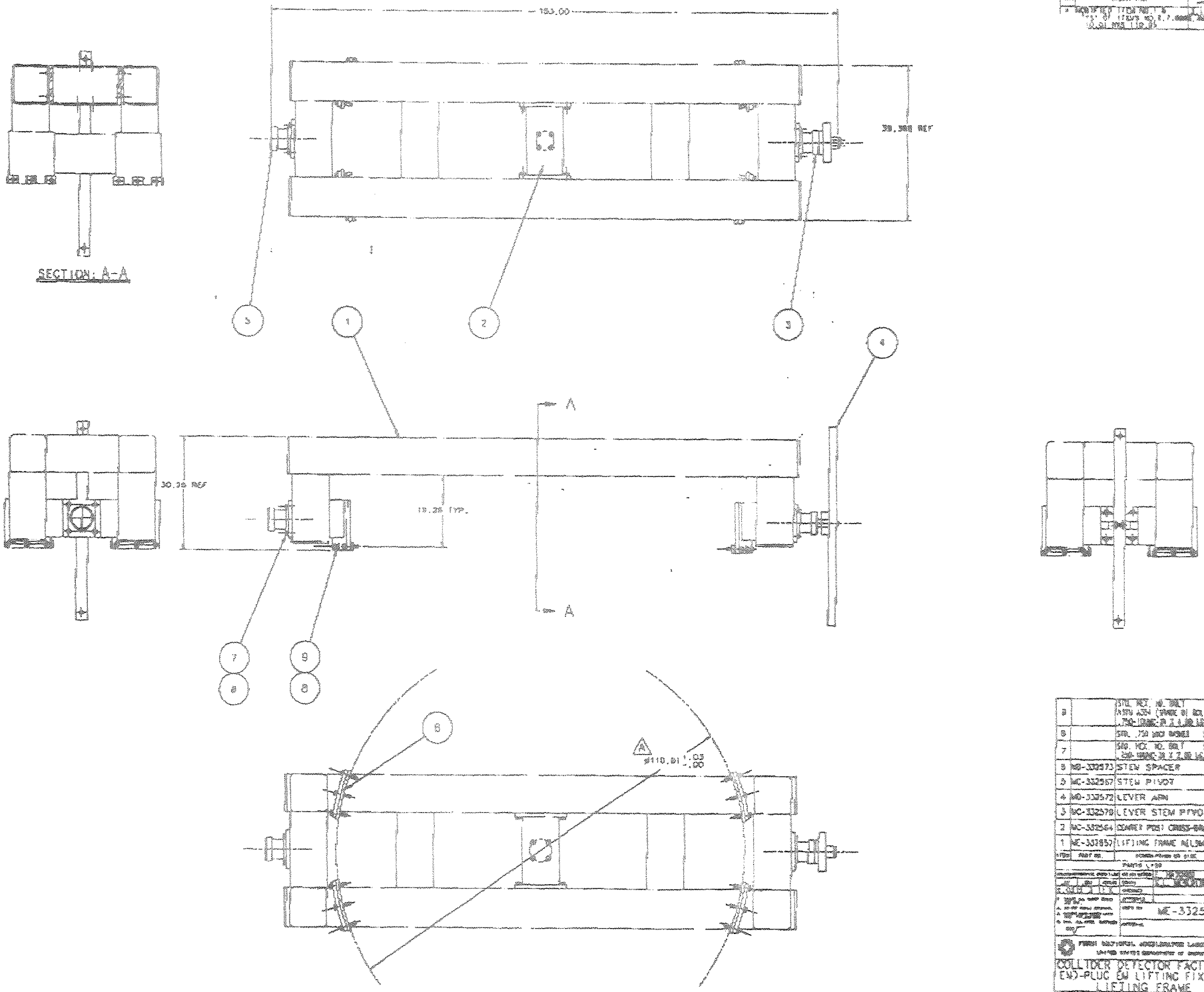

9		STD. HEX. HD. BOLT SS. ASTM A325 (FRAME BY BOLT 3/4-10UNC-2A X 1.00 LG.	18
8		STD. .750 HEX WASHER SS.	22
7		STD. HEX. HD. BOLT SS. 3/4-10UNC-2A X 2.00 LG.	18
6	MC-332573	STEM SPACER	12
5	MC-332567	STEM PIVOT	1
4	MC-332572	LEVER ARM	1
3	MC-332578	LEVER STEM PIVOT	1
2	MC-332564	COMPRESSOR CROSS-BRACE	1
1	MC-332557	LIFTING FRAME ASSEMBLY	1
ITEM	PART NO.	DESCRIPTION OR SIZE	QTY.

PARTS LIST

0.0010	1.0	DRAWN	
		CHECKED	
		APPROVED	
		DWG NO	MC-332555
		APPROVED	

FERMI NATIONAL ACCELERATOR LABORATORY
UNITED STATES DEPARTMENT OF ENERGY

COLLIDER DETECTOR FACILITY
END-PLUG EW LIFTING FIXTURE
LIFTING FRAME

SCALE	DRAWING NO.	REV
1:8	1583.52-MC-332556	1 A

ER NO. 6102

07/25/97 at 11:50 - almmie

CDF END-PLUG LIFTING FIXTURE
FRAME WELDMENT

WELDING PROCEDURE SPECIFICATION (WPS)

Identification # 2563.52-ME-332557
Revision ____ Date ____ By ____
Authorized by ____ Date ____
Type - Manual (X) Semi-Automatic ( )
Machine ( ) Automatic ( )

Company Name FERMILAB
Welding Process(es) SMAW
Supporting PQR No.(s) ____

JOINT DESIGN USED
Type FILLET / GROOVE
Single ( ) Double Weld ( )
Backing Yes ( ) No (X)
Backing Material N/A
Root Opening ____ Root Face Dimension .090
Groove Angle 30° & 60° Radius (J-U) N/A
Back Gouging: Yes ( ) No (X) Method ____

BASE METALS
Material Spec. ASTM 500 / 4140 HTLA
Type or Grade ____
Thickness Groove .420 Fillet .420
Diameter (Pipe) N/A

FILLER METALS
AWS Specification 12018-M
AWS Classification A5.5

SHIELDING
Flux X Gas ____
Composition ____
Electrode-Flux (Class) Flow Rate ____
Gas Cup Size ____

PREHEAT
Preheat Temp., Min. 450°F
Interpass Temp., Min 450°F Max 550°F

POSITION
Position of Groove FLAT Fillet X
Vertical Progression: Up (X) Down ( )

ELECTRICAL CHARACTERISTICS
Transfer Mode (GMAW) Short-Circuiting ( )
Globular ( ) Spray ( )
Current: AC ( ) DCEP (X) DCEN ( ) Pulsed ( )
Other ____

TECHNIQUE
Stringer or Weave Bead STRINGER
Multi-pass or Single Pass (per side) MULTI-PASS
Number of electrodes 1/8 DIA & 5/32 DIA
Electrode Spacing Longitudinal ____
Lateral ____
Angle ____

Contact Tube to Work Distance ____
Peening ____
Interpass Cleaning: CHIPPING & WIRE BRUSHING

POSTWELD HEAT TREATMENT
Temp. 600°F TO 650°F
Time WRAP FOR SLOW COOL DOWN

WELDING PROCEDURE

Pass or Weld Layer(s)	Process	Filler Metals		Current		Volts	Travel Speed	Joint Details
		Class	Diam.	Type & Polarity	Amps or Wire Feed Speed			ATTACHED PRINT

Page 0001 07-28-97 P I C K I N G T I C K E T

Order-#: 121510 Order-date: 07/28/97 Warehouse: MIP-ARC

Sold to: AFCO GAS TECH
[redacted]

Ship to: FERM-U-LAB TO PICK UP
TUESDAY 7-29-97

P.O.#: 4935

Cust-#: 623800 Terms: NET 30 PPD&ADD Sales rep: N/A

Ship-via: PICK UP Date-to-ship: ASAP Date-shipped: _____

Loc COD	LIN #	Item NUMBER	Item Description	Qty Ordered	Qty To-ship	SHIP TOTAL
	001	25-510181-8	AA 12018 1/8X14X50#HS	100.00	100.0	116
	002	25-510531-4	AA 12018 5/32X14X50#HS	100.00	100.0	116
Line items		Totals:		200.00	200.0	

RECEIVED, subject to the classifications and lawfully filed tariffs in effect on the date of the receipt by the carrier of the property described in the Original Bill of Lading

Shipper's No. 121510

PICK UP (Name of Carrier) Carrier's No.

(SCAC)

At 1700 FIRHURST RD ELK GRV, IL 60007 19 97 From MIL-TEC, INC

The property described below, in apparent good order, except as noted (contents and condition of contents of packages unknown), marked, consigned, and destined as indicated below, which said carrier (the word carrier being understood throughout this contract as meaning any person or corporation in possession of the property under the contract) agrees to carry to its place of delivery at said destination, if on its route, otherwise to deliver to another carrier on the route to said destination. It is mutually agreed, as to each carrier of all or any of said property over all or any portion of said route to destination, and as to each party at any time interested in all or any of said property, that every service to be performed hereunder shall be subject to all the terms and conditions of the Uniform Domestic Straight Bill of Lading set forth (1) in Official, Southern, Western, and Trans-Continental Freight Classifications in effect on the date hereof, if this is a rail or rail-water shipment, or (2) in the applicable motor carrier classification or tariffs if this is a motor carrier shipment.

Shipper hereby certifies that he is familiar with all the terms and conditions of the said bill of lading, including those on the back hereof, set forth in the classification or tariff which govern the transportation of this shipment, and the said terms and conditions are hereby agreed to by the shipper and accepted for himself and his assigns.

ON COLLECT ON DELIVERY SHIPMENTS THE LETTERS "COD" MUST APPEAR BEFORE CONSIGNEE'S NAME - OR AS OTHERWISE PROVIDED IN ITEM 430, SEC. 1

CONSIGNED TO AND DESTINATION: FEDX U TRB 10 PICK UP TUESDAY 7-29-97

Mail or street address of Consignee for purposes of notification only

Route

Delivery Address ★

(★ To be filled in only when shipper desires and governing lawfully filed tariffs provide for delivery thereat)

Delivering Carrier

Car or Vehicle Initials No.

No. Packages	★ HM	Kind of Package, Description of Articles, Special Marks, and Exceptions	*Weight (Sub. to Cor.)	Class or Rate	Check Column
2		ITEM-# 197060 SUB-1	600#		
		MILD STEEL WELDING ROD			
		F.O.B. ELK GROVE VILLAGE, IL 60007			
		ORDER NUMBER P/O NUMBER			
		121510 4935			
		PART OF AN AGGREGATE TENDER			
		CONSISTING OF SHIPMENTS			
		TOTALING LBS.			
		PU 8:41			
		7/29/97			

Subject to Section 7 of Conditions of applicable bill of lading, if this shipment is to be delivered to the consignee without recourse on the consignor, the consignor shall sign the following statement:
The carrier shall not make delivery of this shipment without payment of freight and all other lawful charges.

(Signature of Consignor.)

If charges are to be prepaid, write or stamp here, "To be Prepaid."

PREPAID

Received $ to apply in prepayment of the charges on the property described hereon.

Agent or Cashier

Per (The signature here acknowledges only the amount prepaid.)

Collect On Delivery $ and remit to

C. O. D. Charge to be paid by { Shipper ☐ Consignee ☐

*If the shipment moves between two ports by a carrier by water, the law requires that the bill of lading shall state whether it is carrier's or shipper's weight. NOTE—Where the rate is dependent on value, shippers are required to state specifically in writing the agreed or declared value of the property. The agreed or declared value of the property is hereby specifically stated by the shipper to be not exceeding per

Charges Advanced: $

fibre containers used for this shipment conform to the specifications set forth in the box maker's certificate thereon, and all other requirements of Rule 41 of the Uniform Freight Classification or Rule 5 of the National Motor Freight Classification." †Shipper's imprint in lieu of stamp, not a part of bill of lading approved by the Interstate Commerce Commission.

"This is to certify that the above named materials are properly classified, described, packaged, marked and labeled, and are in proper condition for transportation, according to the applicable regulations of the Department of Transportation."

Shipper Per

Agent Per

Permanent post-office address of shipper.

*MARK WITH "X" TO DESIGNATE HAZARDOUS MATERIAL AS DEFINED IN TITLE 49 OF FEDERAL REGULATIONS.

3

REV.	DESCRIPTION	DRAWN / APPR	DATE / DATE
	E.R. #XXXX		

1.0 SCOPE
THIS SPECIFICATION COVERS WELDS FOR 2563.52-ME-332556 FOR JOINING OF A500 GRADE B STRUCTURAL STEEL TO 4140 CARBON STEEL

2.0 MANDATORY REQUIREMENTS

2.1
ALL WELDING JOINTS SHALL BE CLEANED OF SURFACE SCALE AND IMPERFECTIONS BY GRINDING OR MACHINING PRIOR TO WELD

2.2
ALL WELDING ELECTRODES (E-7018 AND 12018-M) SHALL BE STORED IN A ROD OVEN MAINTAINED AT 250 DEGREES FARENHEIT. ALL WELDING ROD EXPOSED TO THE ATMOSPHERE AND NOT USED WITHIN 2 HOURS AFTER BEING REMOVED FROM THE OVEN WILL BE DISCARDED.

2.3
ALL MILD STEEL WELDING SHALL BE DONE WITH AWS TYPE E-7018 ROD.

2.4
ALL 4140 STEEL TO A-500 STRUCTURAL STEEL WELDS SHALL BE WELDED WITH AWS TYPE 12018-M WELDING ROD.

2.5
ALL 4140 STEEL PLATES SHALL BE PREHEATED TO 450-550 DEGREES FARENHEIT BEFORE WELDING WILL OCCUR.

2.6
ALL 4140 STEEL PLATES SHALL MAINTAIN INTERPASS TEMPERATURES AT 450-550 DEGREES FARENHEIT.

2.7
ALL 4140 STEEL PLATES SHALL BE POST HEATED AT 600-650 DEGREES FARENHEIT BY WRAPPING WELDMENT WITH SUITABLE INSULATION FOR SLOW COOL DOWN TO PREVENT CRACKING

2.8
ALL WELDING SHALL BE DONE WITH STRINGER BEAD PASSES REMOVING WELD SLAG BEFORE STARTING NEXT PASS

2.9
ALL WELDS SHALL BE DYE PENETRANT TESTED IN ACCORDANCE WITH AWS B2.1-84 APPENDIX I

Mike
FYI
and comments
Tim

DRAFT

ITEM	PART NO	DESCRIPTION OR SIZE	QTY
PARTS LIST			

UNLESS OTHERWISE SPECIFIED			ORIGINATOR	E. HAGGARD
.XX	.XXX	ANGLES	DRAWN	E. HAGGARD
±	±	±	CHECKED	D. HILLER
1. BREAK ALL SHARP EDGES .02 MAX			APPROVED	
2. DO NOT SCALE DRAWING			USED ON	
3. DIMENSIONS BASED UPON ANSI Y14.5M-1982				
4. MAX ALL MACH SURFACES √			MATERIAL	

FERMI NATIONAL ACCELERATOR LABORATORY
UNITED STATES DEPARTMENT OF ENERGY

COLLIDER DETECTOR FACILITY
END-PLUG EM LIFTING FIXTURE
WELDING SPECIFICATION

SCALE	FILMED	DRAWING NUMBER	REV
		2563.52-ME-332...	

CREATED WITH AUTOCAD

WELDING PROCEDURE SPECIFICATION (WPS) Yes ( )
PREQUALIFIED _____ QUALIFIED BY TESTING _____
or PROCEDURE QUALIFICATION RECORD (PQR) Yes ( )

Identification # MC-332564
Revision _____ Date _____ By _____
Authorized by _____ Date _____
Type - Manual (X) Semi-Automatic ( )
Machine ( ) Automatic ( )

Company Name Fermi
Welding Process(es) SMAW
Supporting PQR No. (s) _____

JOINT DESIGN USED
Type Vee
Single ( ) Double Weld ( ) MULTI
Backing Yes ( ) No ( )
Backing Material NONE
Root Opening _____ Root Face Dimension 090
Groove Angle 60° Radius (J-U) Vee
Back Gouging: Yes ( ) No (X) Method _____

BASE METALS
Material Spec. A-500/4140
Type or Grade _____
Thickness Groove 60° Fillet _____
Diameter (Pipe) _____

FILLER METALS
AWS Specification 12018-M
AWS Classification A5.5

SHIELDING
Flux X Gas _____
Composition _____
Electrode-Flux (Class) Flow Rate _____
_____ Gas Cup Size _____

PREHEAT
Preheat Temp., Min. 450°
Interpass Temp., Min 450° Max 650°

POSITION
Position of Groove Flat Fillet _____
Vertical Progression: Up ( ) Down ( )

ELECTRICAL CHARACTERISTICS
Transfer Mode (GMAW) Short-Circuiting ( )
Globular ( ) Spray ( )
Current: AC ( ) DCEP (X) DCEN ( ) Pulsed ( )
Other _____

TECHNIQUE
Stringer or Weave Bead Stringer
Multi-pass or Single Pass (per side) MULTI
Number of electrodes 1/8 & 5/32
Electrode Spacing Longitudinal _____
Lateral _____
Angle _____

Contact Tube to Work Distance _____
Peening NONE
Interpass Cleaning: Chipping & Wire Brush

POSTWELD HEAT TREATMENT
Temp. 600° to 650° F
Time 1 hour

WELDING PROCEDURE

Pass or Weld Layer(s)	Process	Filler Metals Class (12018-M)	Filler Metals Diam.	Current Type & Polarity	Current Amps or Wire Feed Speed	Volts	Travel Speed
1	SMAW	A.5.5	1/8	DC-REV	145		
2	SMAW	A.5.5	5/32	DC-REV	180		
3	" "	" "	5/32	DC-REV	180		
4	" "	" "	5/32	DC-REV	180		
5	" "	" "	5/32	DC-REV	175		
6	" "	" "	5/32	DC-REV	175		

Joint Details

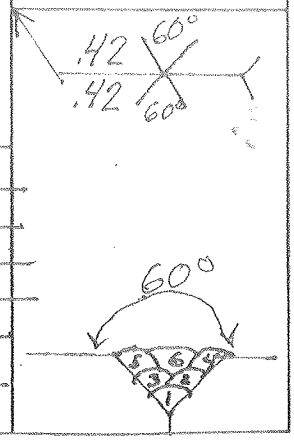

Form E-1 (Front)

WELDING PROCEDURE SPECIFICATION (WPS) Yes ( )
PREQUALIFIED _____ QUALIFIED BY TESTING _____
or PROCEDURE QUALIFICATION RECORD (PQR) Yes ( )

Identification # MC-332564
Revision _____ Date _____ By _____
Authorized by _____ Date _____

Company Name Fermi
Welding Process(es) SMAW
Supporting PQR No.(s) _____

Type - Manual (X) Semi-Automatic ( )
Machine ( ) Automatic ( )

JOINT DESIGN USED
Type Fillet / SINGle Bevel V 30°
Single ( ) Double Weld ( )
Backing Yes ( ) No (X)
Backing Material _____
Root Opening _____ Root Face Dimension .090
Groove Angle 30° Radius (J-U) ✓
Back Gouging: Yes ( ) No (X) Method _____

BASE METALS
Material Spec. A-500 / 4140
Type or Grade _____
Thickness Groove _____ Fillet .42
Diameter (Pipe) _____

FILLER METALS
AWS Specification 12018-M
AWS Classification A5.5

SHIELDING
Flux X Gas _____
Composition _____
Electrode-Flux (Class) Flow Rate _____
_____ Gas Cup Size _____

PREHEAT
Preheat Temp., Min. 450°F
Interpass Temp., Min 450° Max 550°

POSITION
Position of Groove 1 Fillet FLAT
Vertical Progression: Up ( ) Down ( )

ELECTRICAL CHARACTERISTICS
Transfer Mode (GMAW) Short-Circuiting ( )
Globular ( ) Spray ( )
Current: AC ( ) DCEP (X) DCEN ( ) Pulsed ( )
Other _____

TECHNIQUE
Stringer or Weave Bead Stringer
Multi-pass or Single Pass (per side) MULTI
Number of electrodes 1/8 & 5/32 DIA.
Electrode Spacing Longitudinal _____
Lateral _____
Angle _____

Contact Tube to Work Distance _____
Peening _____
Interpass Cleaning: Chipping & WIRE BRUSH

POSTWELD HEAT TREATMENT
Temp. 600° 650° F
Time 1 HOUR

WELDING PROCEDURE

Pass or Weld Layer(s)	Process	Filler Metals Class (12018-M)	Filler Metals Diam.	Current Type & Polarity	Current Amps or Wire Feed Speed	Volts	Travel Speed
1	SMAW	A5.5	1/8	DC-REV	153		
2	" "	" "	1/8	DC-REV	150		
3	" "	" "	5/32	DC-REV	180		
4	" "	" "	5/32	DC.REV	180		
5	" "	" "	5/32	D.C REV	180		
6	" "	" "	5/32	DC.REV	180		
7	" "	" "	1/8	DC.REV	150		

Joint Details

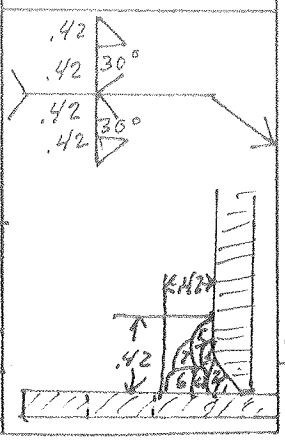

Form E-1 (Front)

Project C.D.F. Lifting fixture ME-332556
Quality requirements — section no. No vis. cracks
Reported to

WELD LOCATION AND IDENTIFICATION SKETCH

MC.332564 Center Post Cross Brace

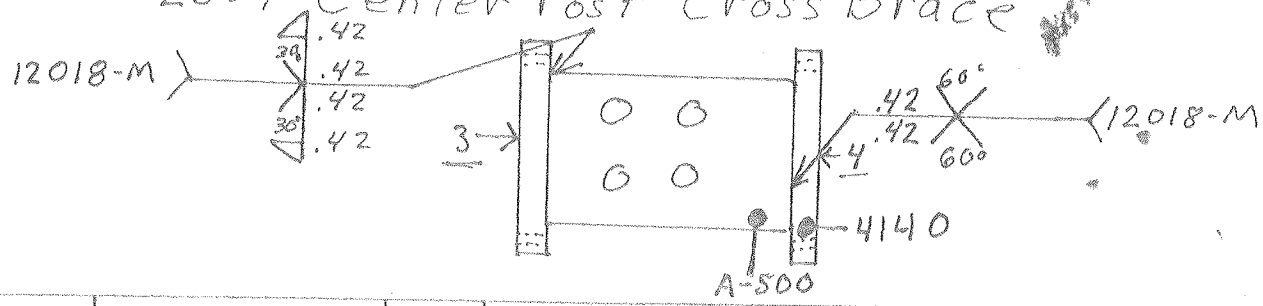

	Date	Weld identification	Area	Interpretation Accept.	Interpretation Reject	Repairs Accept.	Repairs Reject	Remarks
3		Fillet		X				END MARKED 3
		V-Groove		X				
4		Fillet		X				END MARKED 4
		V-Groove		X				

We, the undersigned, certify that the statements in this record are correct and that the welds were prepared and tested in accordance with the requirements of the American Welding Society ANSI/AWS D1.1, (_____ year) Structural Welding Code-Steel.

Inspector Michael Reynolds

Test date 8/9/97

Method of inspection: DYE PENETRANT

☐ Dry ☐ Wet ☐ Residual ☐ Continuous

☐ AC ☐ DC ☐ Half-wave

Manufacturer or contractor

Authorized by

Date

Form E-8

© 1978 by American Welding Society. All rights reserved.

WELDING PROCEDURE SPECIFICATION (WPS) Yes ( )
PREQUALIFIED _____ QUALIFIED BY TESTING _____
or PROCEDURE QUALIFICATION RECORD (PQR) Yes ( )

Identification # ME 332556+57
Revision _____ Date _____ By _____
Authorized by _____ Date _____
Type - Manual ( ) Semi-Automatic ( )
Machine ( ) Automatic ( )

Company Name Fermi
Welding Process(es) SMAW
Supporting PQR No.(s) _____

JOINT DESIGN USED
Type Vee/Fillet
Single ( ) Double Weld ( ) MULTI
Backing Yes ( ) No ( )
Backing Material NO
Root Opening _____ Root Face Dimension _____
Groove Angle 60° Radius (J-U) ✓
Back Gouging: Yes ( ) No (X) Method _____

BASE METALS
Material Spec. A-500 / 4140
Type or Grade _____
Thickness Groove _____ Fillet 1/2
Diameter (Pipe) _____

FILLER METALS
AWS Specification 12018-M
AWS Classification A5.5.

SHIELDING
Flux X Gas _____
Composition _____
Electrode-Flux (Class) Flow Rate _____
Gas Cup Size _____

PREHEAT
Preheat Temp., Min. 450°
Interpass Temp., Min 450° Max 650°

POSITION
Position of Groove FLAT Fillet FLAT
Vertical Progression: Up ( ) Down ( )

ELECTRICAL CHARACTERISTICS
Transfer Mode (GMAW) Short-Circuiting ( )
Globular ( ) Spray ( )
Current: AC ( ) DCEP (X) DCEN ( ) Pulsed ( )
Other _____

TECHNIQUE
Stringer or Weave Bead Stringer
Multi-pass or Single Pass (per side) MULTI
Number of electrodes _____
Electrode Spacing Longitudinal _____
Lateral _____
Angle _____

Contact Tube to Work Distance _____
Peening NO
Interpass Cleaning: AIR Chipper + WIRE

POSTWELD HEAT TREATMENT
Temp. 600°
Time 1 hr.

WELDING PROCEDURE

Pass or Weld Layer(s)	Process	Filler Metals Class	Filler Metals Diam.	Current Type & Polarity	Current Amps or Wire Feed Speed	Volts	Travel Speed
1	SMAW	A5.5	1/8	DC REV.	140	—	—
2	SMAW	A5.5	5/32	DC REV	165	—	—
3	SMAW	A5.5	5/32	DC REV	170	—	—
4	SMAW	A5.5	5/32	DC REV	170	—	—
5	SMAW	A5.5	5/32	DC REV	165	—	—

Joint Details

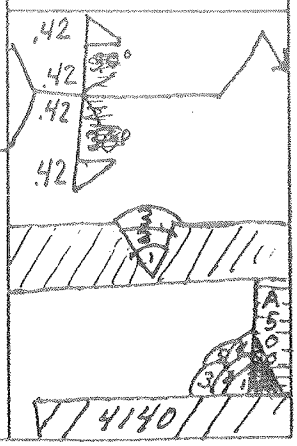

Form E-1 (Front)

Project CDF Lifting Fixture ME 332556
Quality requirements — section no. NO VIS cracks
Reported to

ME 332557 WELD LOCATION AND IDENTIFICATION SKETCH

STEM + STEM PLATE

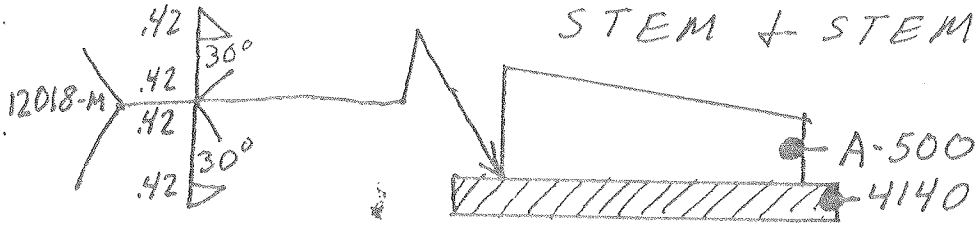

Date	Weld identification	Area	Interpretation Accept.	Interpretation Reject	Repairs Accept.	Repairs Reject	Remarks
9/24	1 STAMPED		X				NO VIS. CRACKS
9/24	2 STAMPED		X				NO VIS. CRACKS
9/24	3 STAMPED		X				NO VIS. CRACKS
9/24	4 STAMED		X				NO VIS. CRACKS

We, the undersigned, certify that the statements in this record are correct and that the welds were prepared and tested in accordance with the requirements of the American Welding Society ANSI/AWS D1.1, (_____ year) Structural Welding Code-Steel.

Inspector [signature]

Test date 9/24/97

Method of inspection: Dye Penetrant

☐ Dry ☐ Wet ☐ Residual ☐ Continuous

☐ AC ☐ DC ☐ Half-wave

Manufacturer or contractor

Authorized by

Date

Form E-8

© 1978 by American Welding Society. All rights reserved.

WELDING PROCEDURE SPECIFICATION (WPS) Yes ( )
PREQUALIFIED _____ QUALIFIED BY TESTING _____
or PROCEDURE QUALIFICATION RECORD (PQR) Yes ( )

Identification # ME 332593
Revision _____ Date _____ By _____
Authorized by _____ Date _____

Company Name Fermi
Welding Process(es) SMAW
Supporting PQR No.(s) _____

Type - Manual (X) Semi-Automatic ( )
Machine ( ) Automatic ( )

JOINT DESIGN USED
Type VEE/Fillet
Single ( ) Double Weld (✓) MULTI
Backing Yes ( ) No (✓)
Backing Material _____
Root Opening _____ Root Face Dimension _____
Groove Angle 30° Radius (J-U) _____
Back Gouging: Yes ( ) No (X) Method _____

BASE METALS
Material Spec. A-500/4140
Type or Grade _____
Thickness Groove 30° Fillet .50
Diameter (Pipe) _____

FILLER METALS
AWS Specification 12018-M
AWS Classification A5.5

SHIELDING
Flux Y Gas _____
Composition _____
Electrode-Flux (Class) Flow Rate _____
Gas Cup Size _____

PREHEAT
Preheat Temp., Min. 450°
Interpass Temp., Min 450° Max 650°

POSITION
Position of Groove Flat Fillet Flat
Vertical Progression: Up ( ) Down ( )

ELECTRICAL CHARACTERISTICS
Transfer Mode (GMAW) Short-Circuiting ( )
Globular ( ) Spray ( )
Current: AC ( ) DCEP (X) DCEN ( ) Pulsed ( )
Other _____

TECHNIQUE
Stringer or Weave Bead Stringer
Multi-pass or Single Pass (per side) Multi
Number of electrodes _____
Electrode Spacing Longitudinal _____
Lateral _____
Angle _____

Contact Tube to Work Distance _____
Peening NONE
Interpass Cleaning: Airchipper + wire brush

POSTWELD HEAT TREATMENT
Temp. 600°+650°
Time 1 hour

WELDING PROCEDURE

Pass or Weld Layer(s)	Process	Filler Metals Class (12018-)	Filler Metals Diam. (M)	Current Type & Polarity	Current Amps or Wire Feed Speed	Volts	Travel Speed
1	SMAW	A.5.5	1/8	DC-REV	145	–	12018-M
2	SMAW	A5.5	5/32	DC-Rev	165	–	12018
3	SMAW	A5.5	5/32	DC-Rev	162	–	
4	SMAW	A5.5	5/32	DC-REV	162	–	
5	SMAW	A5.5	5/32	DC-REV	160	–	

Joint Details

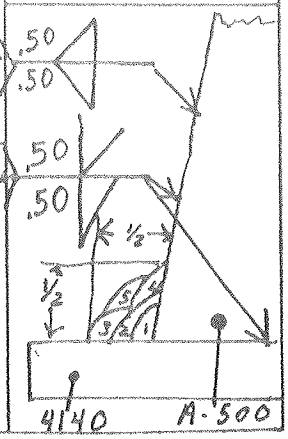

Form E-1 (Front)

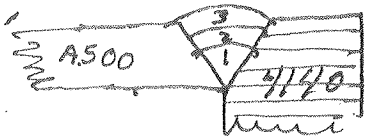

Project CDF Lifting Fixture "Test STAND" - ME 332593
Quality requirements — ~~section no.~~ No VIS. Cracks
Reported to

WELD LOCATION AND IDENTIFICATION SKETCH

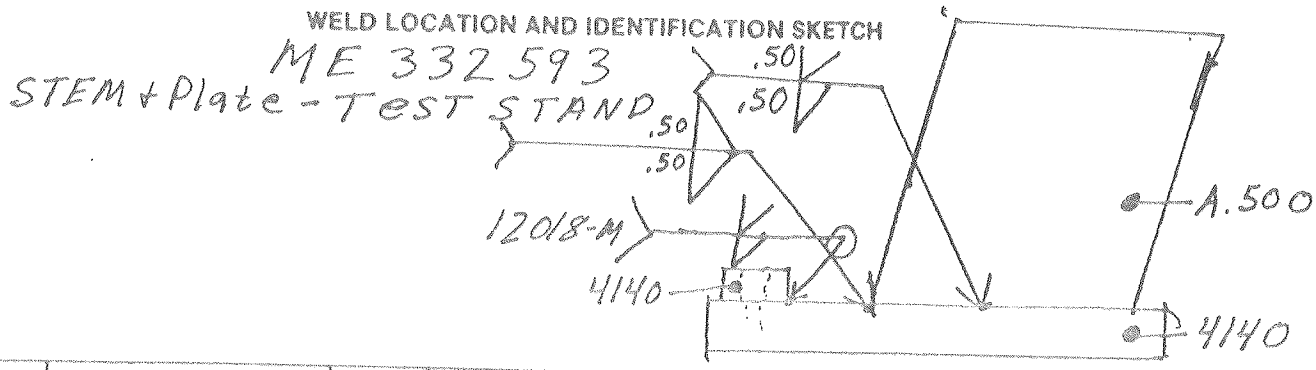

Date	Weld identification	Area	Interpretation		Repairs		Remarks
			Accept.	Reject	Accept.	Reject	
9/30	A STAMPL		X				NO VIS
9/30	B		X				NO VIS
9/30	C		X				NO VIS
9/30	D		X				NO VIS

We, the undersigned, certify that the statements in this record are correct and that the welds were prepared and tested in accordance with the requirements of the American Welding Society ANSI/AWS D1.1, (_____) Structural Welding Code-Steel.
year

Inspector Michael P. Kennedy

Test date 9-30-97

Method of inspection: Dye Pentrant

☐ Dry ☐ Wet ☐ Residual ☐ Continuous

☐ AC ☐ DC ☐ Half-wave

Manufacturer or contractor

Authorized by

Date

Form E-8

© 1978 by American Welding Society. All rights reserved.

WELDING PROCEDURE SPECIFICATION (WPS) Yes ( )
PREQUALIFIED _____ QUALIFIED BY TESTING _____
or PROCEDURE QUALIFICATION RECORD (PQR) Yes ( )

Identification # ME 332556
Revision 332627 Date 10/28/47 By _____
Authorized by E. Haggard Date _____

Company Name Fermi
Welding Process(es) SMAW
Supporting PQR No.(s) _____

Type - Manual (X) Semi-Automatic ( )
Machine ( ) Automatic ( )

JOINT DESIGN USED
Type VEE / Fillet
Single ( ) / Double Weld ( ) MULTI
Backing Yes ( ) No (X)
Backing Material _____
Root Opening _____ Root Face Dimension _____
~~Groove Angle~~ Fillet ∠ Radius (J) (U) J
Back Gouging: Yes ( ) No (Y) Method _____

BASE METALS
Material Spec. A500 / 4140
Type or Grade _____
Thickness Groove _____ Fillet 1/2
Diameter (Pipe) _____

FILLER METALS
AWS Specification 12018-M
AWS Classification A5.5.

SHIELDING X
Flux _____ Gas _____
Composition _____
Electrode-Flux (Class) Flow Rate _____
_____ Gas Cup Size _____

PREHEAT
Preheat Temp., Min. 450°
Interpass Temp., Min 450° Max 650°

POSITION
Position of Groove FLAT Fillet Flat
Vertical Progression: Up ( ) Down ( )

ELECTRICAL CHARACTERISTICS
Transfer Mode (GMAW) Short-Circuiting ( )
Globular ( ) Spray ( )
Current: AC ( ) DCEP (X) DCEN ( ) Pulsed ( )
Other _____

TECHNIQUE
Stringer or Weave Bead Stringer
Multi-pass or Single Pass (per side) MULTI
Number of electrodes _____
Electrode Spacing Longitudinal _____
Lateral _____
Angle _____

Contact Tube to Work Distance _____
Peening NO
Interpass Cleaning: AIR CHIPPER & WIRE

POSTWELD HEAT TREATMENT
Temp. 600°
Time 1 hr.

WELDING PROCEDURE

	Pass or Weld Layer(s)	Process	Filler Metals Class	Filler Metals Diam.	Current Type & Polarity	Current Amps or Wire Feed Speed	Volts	Travel Speed
1	1. ~~SMAW~~	SMAW	A5.5	1/8	DC REV	142	—	—
	2.	SMAW	A5.5	5/32	DC REV	170	—	—
	3	SMAW	A.5.5	5/32	DC REV	170	—	—
	4	SMAW	A5.5	5/32	DC REV	170	—	—
	5	SMAW	A.5.5	5/32	DC REV	165	—	—
2	1.	SMAW	A.5.5	5/32	DC REV	170	—	—
	2	SMAW	A5.5.	5/32	DC REV	170	—	—
	3	SMAW	A5.5	5/32	DC REV	165	—	—
	4	SMAW	A5.5	1/8	DC REV	145	—	—

Joint Details

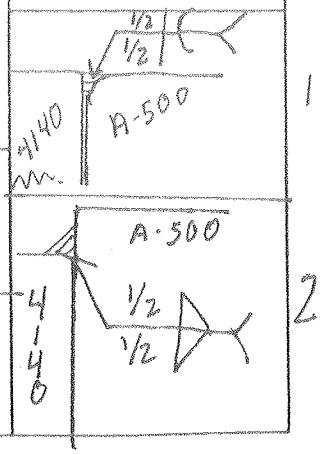

Form E-1 (Front)

Project CDF Lifting fixture / PIVOT Plate / ME332556
Quality requirements — section no. NO VIS CRACKS
Reported to

WELD LOCATION AND IDENTIFICATION SKETCH

ME MD 332627 REV. 10/28/97 E. HAGEARD

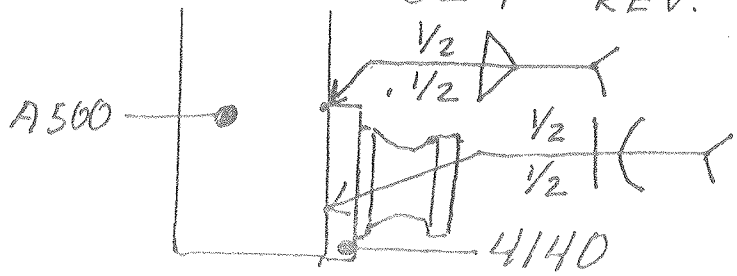

Date	Weld identification	Area	Interpretation		Repairs		Remarks
			Accept.	Reject	Accept.	Reject	
	Fillet		X				NO VIS CRACK
	1/2 groove		X				NO VIS. Crack
	Fillet		X				NO VIS. Crack
	1/2 groove		X				NO VIS. Crack

We, the undersigned, certify that the statements in this record are correct and that the welds were prepared and tested in accordance with the requirements of the American Welding Society ANSI/AWS D1.1, (_____) Structural Welding Code-Steel.
year

Inspector Michael P. Ryander

Test date

Manufacturer or contractor

Authorized by

Date

Method of inspection:

☐ Dry ☐ Wet ☐ Residual ☐ Continuous

☐ AC ☐ DC ☐ Half-wave

Form E-8

© 1978 by American Welding Society. All rights reserved.

TEST Results

CDF Lifting fixture

post Load TEST

DYE PENETRANT

11/3+4/97

WELD LOCATIONS

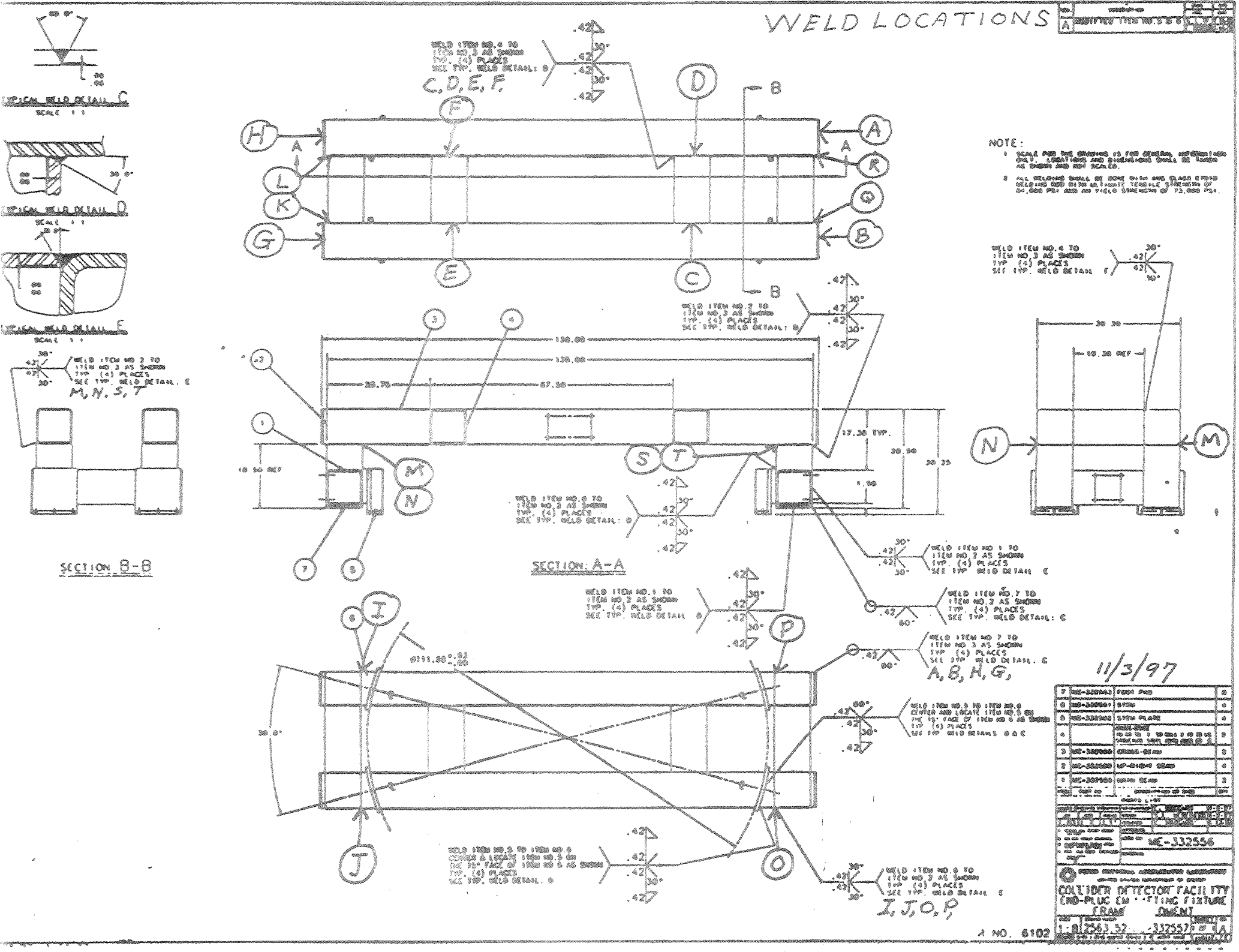

Project C.D.F. Lifting Fixture end plug
Quality requirements — section no.
Reported to

WELD LOCATION AND IDENTIFICATION SKETCH

Frame Weldment
ME-332557
AFTER LOAD TEST 11/2/97

Date	Weld identification	Area	Interpretation Accept.	Interpretation Reject	Repairs Accept.	Repairs Reject	Remarks
11/3		A	✓				
		B	✓				
		C	✓				
		D	✓				No
11/3		E	✓				
		F	✓				
		G	✓				
		H	✓				
11/3		I	✓				Kis
		J	✓				
		K	✓				
		L	✓				
11/4		M	✓				Cracks
		N	✓				
		O	✓				
		P	✓				
11/4		Q	✓				
		R	✓				
		S	✓				
		T	✓				

We, the undersigned, certify that the statements in this record are correct and that the welds were prepared and tested in accordance with the requirements of the American Welding Society ANSI/AWS D1.1, (_____ year) Structural Welding Code-Steel.

Inspector Michael P. Reynolds

Test date November 3 & 4, 1997

Manufacturer or contractor

Authorized by

Date

Method of inspection:

☐ Dry ☐ Wet ☐ Residual ☐ Continuous

☐ AC ☐ DC ☐ Half-wave

Form E-8

© 1978 by American Welding Society. All rights reserved.

Project C.D.F Lifting fixture end plug
Quality requirements — section no.
Reported to

AFTER LOAD TEST 11/2/97

WELD LOCATION AND IDENTIFICATION SKETCH

MC 332567 - PIVOT
MC 332564 - Center Post Cross brace
ME 332593 - STEM/STEM Plate
ME 332556 - STEM/STEMplate
ME 332556/567/MD 332627 - REV. pivot Brace
(4140/A-500)

	Date	Weld identification	Area	Interpretation Accept.	Interpretation Reject	Repairs Accept.	Repairs Reject	Remarks
567	11/4	Fillet		✓				
		Groove 60° 1		✓				
		Fillet		✓				
		Groove 60° 2		✓				
564	11/4	Fillet		✓				No Vis Cracks
		V groove 30° 3		✓				
		Fillet		✓				
		V groove 30° 4		✓				
593	11/4	Fillet A		✓				
		Fillet B		✓				
		Fillet C		✓				
		Fillet D		✓				
556	11/4	Fillet 1		✓				
		Fillet 2		✓				
		Fillet 3		✓				
		Fillet 4		✓				
556/627	11/4	Fillet		✓				
		J-Groove		✓				
		Fillet		✓				
		J-Groove		✓				

We, the undersigned, certify that the statements in this record are correct and that the welds were prepared and tested in accordance with the requirements of the American Welding Society ANSI/AWS D1.1, (_____ year) Structural Welding Code-Steel.

Inspector Mike Reynolds

Test date November 3 & 4, 1997

Method of inspection: Dye penetrant

☐ Dry ☐ Wet ☐ Residual ☐ Continuous

☐ AC ☐ DC ☐ Half-wave

Manufacturer or contractor

Authorized by

Date

Form E-8

© 1978 by American Welding Society. All rights reserved.

10-30-97

Revised JSK 1-12-97

TEST PROCEDURE FOR THE CDF EM LIFTING FIXTURE

Eric Haggard TD/Engr. & Fab.

Em Lifting Fixture Assembly is described in Fermilab Dwg. Number 2563.52-ME-332555

Em Lifting Fixture Test Frame is described in Fermilab Dwg. Number 2563.52-ME-332617.

Additional Items Required to Complete this Procedure

- Quantity of 12 special high strength bolts 3/4-10. See Engineering Note for description and specifications.
- Torque Wrench or wrenching system capable of 650 ft-lb
- 2 hydraulic hand pumps with pressure gages.
- The Crane and slings capable of lifting 3000 lbs.
- This document

GENERAL PROCEDURE FOR TESTING OF THE LIFTING FIXTURE

1. Layout test fixtures as shown in 2563.52-ME-332617 and fasten to the assembly table using c-clamps.
2. Sling the EM lifting fixture and move to the test stands.
3. Bolt the lifting fixture to the test stands using the provided High strength bolts, and 12 spacers (QTY 4 nom 0.75" thk MB-332573; QTY 8 nom 1.5" thk MB-332639) laid out as shown in ME-332617.
4. Torque each of the 12 bolts to 650 ft-lb.
5. Install Pivot cylinders and pusher rods as per ME-332617.
6. Install the hand pumps to the hydraulic cylinders, making sure that the two horizontal cylinders are in parallel, and the two vertical cylinders are in parallel. Pressurize each cylinder to 200 psi to check for proper operation. Release pressure on the cylinders.

FULL TEST OF FIXTURE:

7. Follow the Load steps listed in the table bellow allowing the fixture to remain at each step for a minute before proceeding to the next step.
8. Repeat Load step sequences 3 times.

Rotation Angle	Pressure Vertical	Force	Pressure Horizontal	Force
0	3750 psi	18750 lb	0	0
15	3622 psi	18748 lb	970 psi	4788 lb
30	3247 psi	16021 lb	1875 psi	9250 lb
45	2652 psi	13081 lb	2652 psi	13081 lb
60	1875 psi	9250 lb	3247 psi	16021 lb
75	970 psi	4788 lb	3622 psi	18748 lb
90	0	0	3750 psi	18750 lb

Tolerance + 20 psi/ - 0 psi

TEST WITH 4 BOLTS REMOVED:

9. Remove the center bolts at each of the 4 attachment regions, leaving the external bolts (8 total) only. Reference marked up version of ME-332617, attached.

10. Repeat the Load step sequence 3 more times.

11. After the test is complete, dye penetrant check the lifting fixture welds in accordance with AWS B2.1-84 Appendix F procedure.

This Procedure was executed by 1350 1/15/98

This Procedure was witnessed by

RECORD OF CYLINDER PRESSURES – FULL TEST – CYCLE 1

Rotation Angle	Pressure Vertical	Actual	Pressure Horizontal	Actual
0	3750 psi	3800	0	-0-
15	3622 psi	3666	970 psi	1050
30	3247 psi	3350	1875 psi	1910
45	2652 psi	2720	2652 psi	2678
60	1875 psi	2042	3247 psi	3265
75	970 psi	1030	3622 psi	3700
90	0	44	3750 psi	3808

CYCLE 2 Tolerance + 20 psi/ - 0 psi

Rotation Angle	Pressure Vertical	Actual	Pressure Horizontal	Actual
0	3750 psi	3850	0	-0-
15	3622 psi	3712	970 psi	1028
30	3247 psi	3295	1875 psi	1930
45	2652 psi	2710	2652 psi	2729
60	1875 psi	1960	3247 psi	3301
75	970 psi	1073	3622 psi	3670
90	0	43	3750 psi	3790

CYCLE 3 Tolerance + 20 psi/ - 0 psi

Rotation Angle	Pressure Vertical	Actual	Pressure Horizontal	Actual
0	3750 psi	3802	0	-0-
15	3622 psi	3693	970 psi	1005
30	3247 psi	3359	1875 psi	1940
45	2652 psi	2809	2652 psi	2682
60	1875 psi	2033	3247 psi	3560
75	970 psi	1078	3622 psi	3733
90	0	36	3750 psi	3840

Tolerance + 20 psi/ - 0 psi

Checked scribe line near spacers – no detectable motion of joints. JSK

Done 9:25 A 1/15/98

RECORD OF CYLINDER PRESSURES – TEST WITH 4 BOLTS REMOVED – CYCLE 1

Rotation Angle	Pressure Vertical	Actual	Pressure Horizontal	Actual
0	3750 psi	3820	0	0
15	3622 psi	3743	970 psi	990
30	3247 psi	3294	1875 psi	1900
45	2652 psi	2700	2652 psi	2790
60	1875 psi	1930	3247 psi	3300
75	970 psi	1092	3622 psi	3720
90	0	32	3750 psi	3840

CYCLE 2 Tolerance + 20 psi/ - 0 psi

Rotation Angle	Pressure Vertical	Actual	Pressure Horizontal	Actual
0	3750 psi	3800	0	72
15	3622 psi	3660	970 psi	1027
30	3247 psi	3260	1875 psi	1900
45	2652 psi	2706	2652 psi	2710
60	1875 psi	2042	3247 psi	3308
75	970 psi	1167	3622 psi	3800
90	0	32	3750 psi	3882

CYCLE 3 Tolerance + 20 psi/ - 0 psi

Rotation Angle	Pressure Vertical	Actual	Pressure Horizontal	Actual
0	3750 psi	3800	0	350 ←
15	3622 psi	3690	970 psi	1010
30	3247 psi	3322	1875 psi	1940
45	2652 psi	2684	2652 psi	2700
60	1875 psi	1901	3247 psi	3300
75	970 psi	1076	3622 psi	3850
90	0	55	3750 psi	3900

not a false reading. left pressure in line to make increase easier.

Tolerance + 20 psi/ - 0 psi

Checked scribe line near spacers – no detectable motion of joints. JSK 1/15/98 10:40 A

REV.	DESCRIPTION	DRAWN / APPD.	DATE / DATE
A	AS-BUILT REVISIONS	S.L.M.	1-7-98

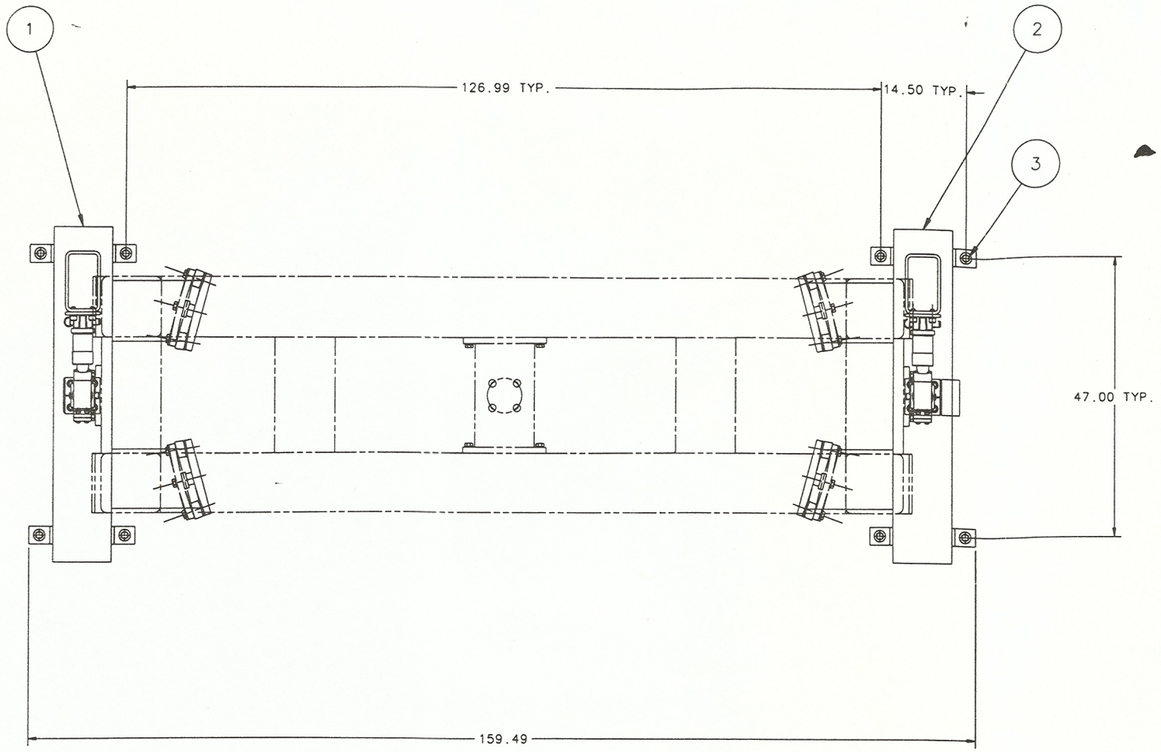

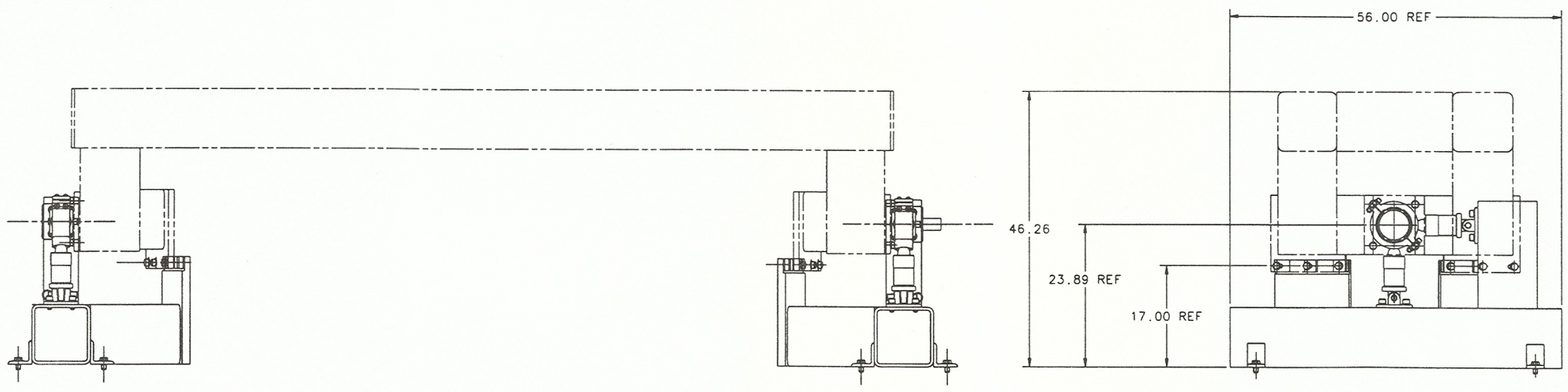

ITEM	PART NO.	DESCRIPTION OR SIZE	QTY.
3	FERMILAB STK. NO. 1204-1200	ANCHOR FLUSH DROP-IN TYPE RED HD. MULT-SET II .750-10UNC-2A BOLT SIZE	8
2	ME-332618	TEST STAND (L.H.)	1
1	ME-332592	TEST STAND (R.H.)	1

PARTS LIST

UNLESS OTHERWISE SPECIFIED				
.XX	.XXX	ANGLES	ORIGINATOR	E. HAGGARD 8-14-97
± .03	± X	± X	DRAWN	S.L. MEREDITH 8-14-97
			CHECKED	E. HAGGARD 8-97
			APPROVED	E. HAGGARD 8-97

1. BREAK ALL SHARP EDGES .03 MAX.
2. DO NOT SCALE DRAWING.
3. DIMENSIONS BASED UPON ANSI Y14.5M-1982
4. MAX. ALL MACH. SURFACES 250

USED ON

MATERIAL

FERMI NATIONAL ACCELERATOR LABORATORY
UNITED STATES DEPARTMENT OF ENERGY

COLLIDER DETECTOR FACILITY
END-PLUG EM LIFTING FIXTURE TEST STAND
MAIN ASSEMBLY

SCALE	DRAWING NUMBER	SHEET	REV.
1 : 4	2563.52-ME-332617	1 OF 1	A

CREATED WITH I-DEAS MASTER SERIES 2.1 USER NAME: SIMMIELEE

Plotted Tue Jan 13 16:30:13 CST 1998 by simmie

4 BOLTS REMOVED
(CENTER, EACH LOCATION)

CENTER SPACER COULD NOT BE REMOVED DUE TO LOAD FROM OTHER 2 BOLTS. BUT CENTER BOLT IS REMOVED

4 BOLTS REMOVED
FULL VERTICAL LOAD

FULL TESTY
- FULL VERTICAL LOAD

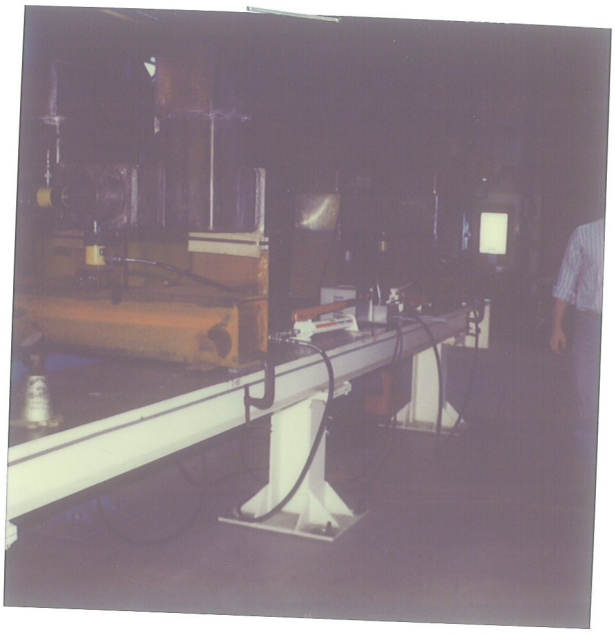

FULL TEST

EXAMINATION OF WELDS

Project EM-6 PLATE C.D.F LIFTING FIXTURE

Quality requirements — section no. _____

Reported to _____

WELD LOCATION AND IDENTIFICATION SKETCH

FRAME WELDMENT

ME - 332557

AFTER 2nd LOAD TEST 1/15/98

Date	Weld Identification	Area	Interpretation Accept.	Interpretation Reject	Repairs Accept.	Repairs Reject	Remarks
1-16-98		A	✓				
✓		B	✓				
✓		C	✓				
✓		D	✓				
✓		E	✓				
✓		F	✓				
✓		G	✓				
✓		H	✓				
✓		I	✓				
✓		J	✓				
✓		K	✓				
✓		L	✓				
✓		M	✓				
✓		N	✓				
✓		O	✓				
✓		P	✓				
✓		Q	✓				
✓		R	✓				
✓		S	✓				
✓		T	✓				
—	—	—	—				

We, the undersigned, certify that the statements in this record are correct and that the welds were prepared and tested in accordance with the requirements of the American Welding Society ANSI/AWS D1.1, (_____ year) Structural Welding Code-Steel.

Inspector OTTO ALVAREZ

Test date 1-16-98

Manufacturer or contractor _____

Authorized by _____

Date _____

EXAMINATION OF WELDS

Project EM-6 PLATE C.D.F. LIFTING FIXTURE

Quality requirements — section no.

Reported to

WELD LOCATION AND IDENTIFICATION SKETCH

AFTER 2nd LOAD TEST 1-15-98

MC 332567 - PIVOT

MC 332593 - STEM/STEM PLATE

Date	Weld Identification	Area	Interpretation		Repairs		Remarks
			Accept.	Reject	Accept.	Reject	
1-15-98	1 - STAMPED		✓				NO VISIBLE CRACKS
✓	2 - STAMPED		✓				✓
✓	3 - STAMPED		✓				✓
✓	4 - STAMPED		✓				✓
✓	PIVOT/PIVOT PLATE		✓				✓
✓	PIVOT PLATE/FRAME		✓				✓

We, the undersigned, certify that the statements in this record are correct and that the welds were prepared and tested in accordance with the requirements of the American Welding Society ANSI/AWS D1.1, (_____) Structural Welding Code-Steel.
year

Inspector OTTO ALVAREZ

Test date 1-16-98

Manufacturer or contractor

Authorized by

Date

WELD LOCATIONS

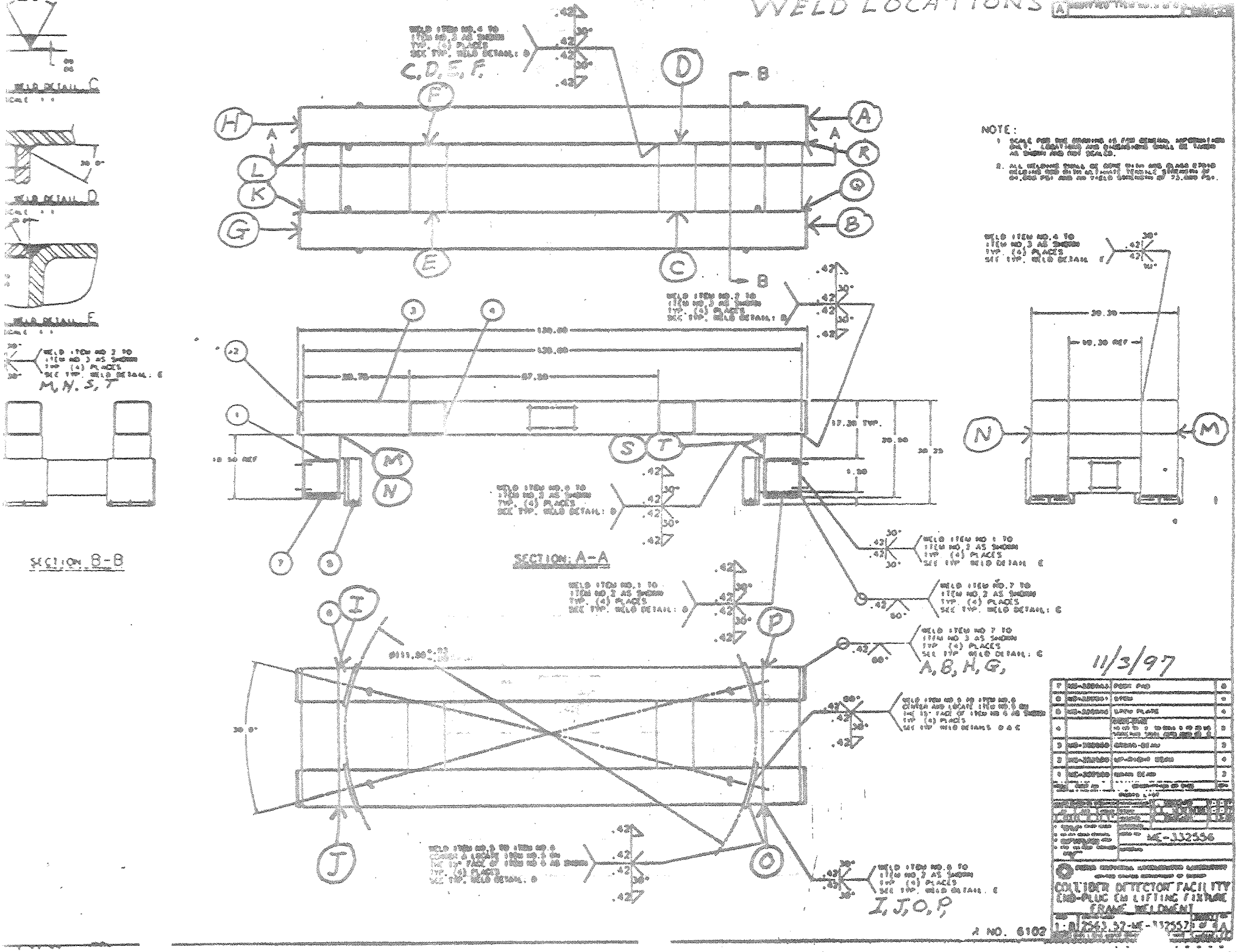

REV.	DESCRIPTION	DRAWN BY	DATE
A	AS-BUILT REVISIONS	S.L. M	7-96

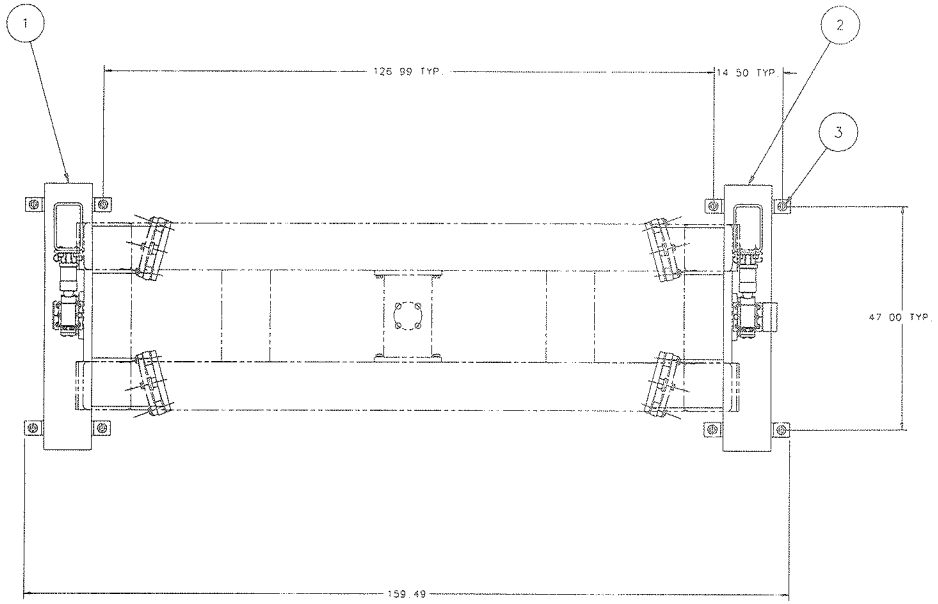

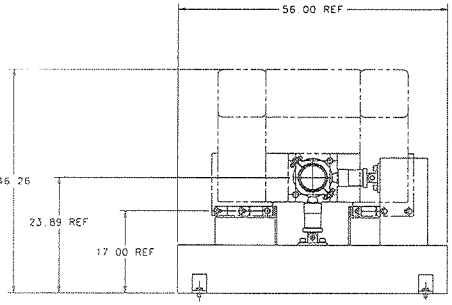

ITEM	PART NO.	DESCRIPTION OR SIZE	QTY.
3	FERMILAB STK. NO. 1204-1200	ANCHOR FLUSH DROP-IN TYPE RED HD. MULT-SET II .750-10UNC-2A BOLT SIZE	8
2	ME-332618	TEST STAND (L.H.)	1
1	ME-332592	TEST STAND (R.H.)	1

PARTS LIST

UNLESS OTHERWISE SPECIFIED			ORIGINATOR	F. HAGGARD	8-14-97
XX	XXX	ANGLES	DRAWN	S.L. MEREDITH	8-14-97
±.031	X	±.X	CHECKED	L. HAGGARD	8-97
1. BREAK ALL SHARP EDGES .01 MAX			APPROVED	R. HAGGARD	8-97
2. DO NOT SCALE DRAWING			USED ON		
3. DIMENSIONS BLANKED UPON FINISH PLATING			MATERIAL		
4. MAX. ALL MACH. SURFACES 250					

FERMI NATIONAL ACCELERATOR LABORATORY
UNITED STATES DEPARTMENT OF ENERGY

COLLIDER DETECTOR FACILITY
END-PLUG EM LIFTING FIXTURE TEST STAND
MAIN ASSEMBLY

SCALE	DRAWING NUMBER	SHEET 1 OF 1	REV
1:4	2563.52-ME-332617		A

CREATED WITH I-DEAS MASTER SERIES 2.1 USER NAME: SLMILLER

Plotted Tue Jan 13 16:30:13 CST 1998 by slamic

REV.		DRAWN	DATE
	ER NO. 6102	APPR.	DATE
A	REVISED STEM PLATE	S.L.M.	12-7-97

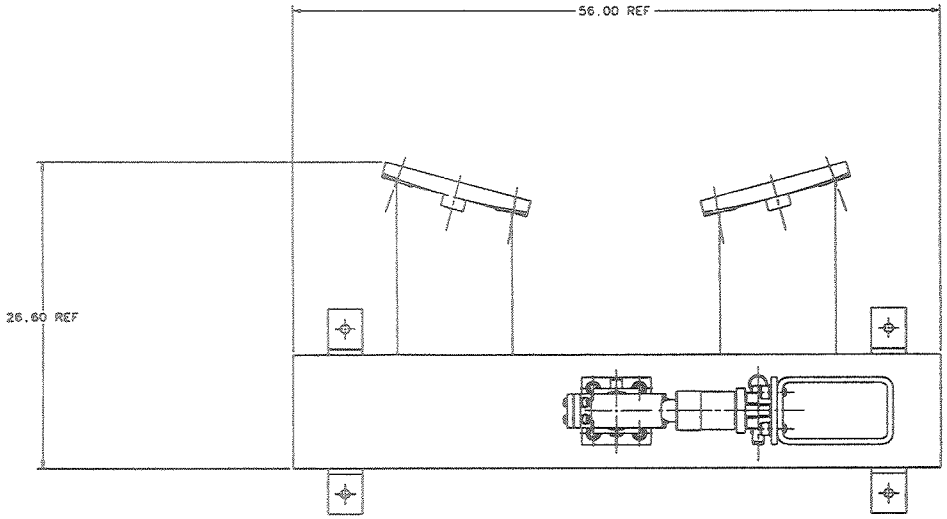

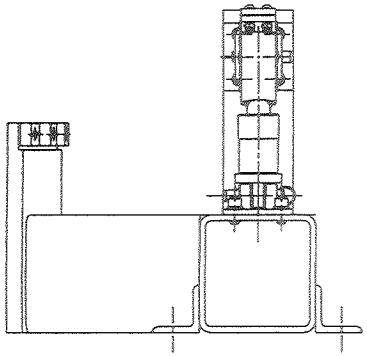

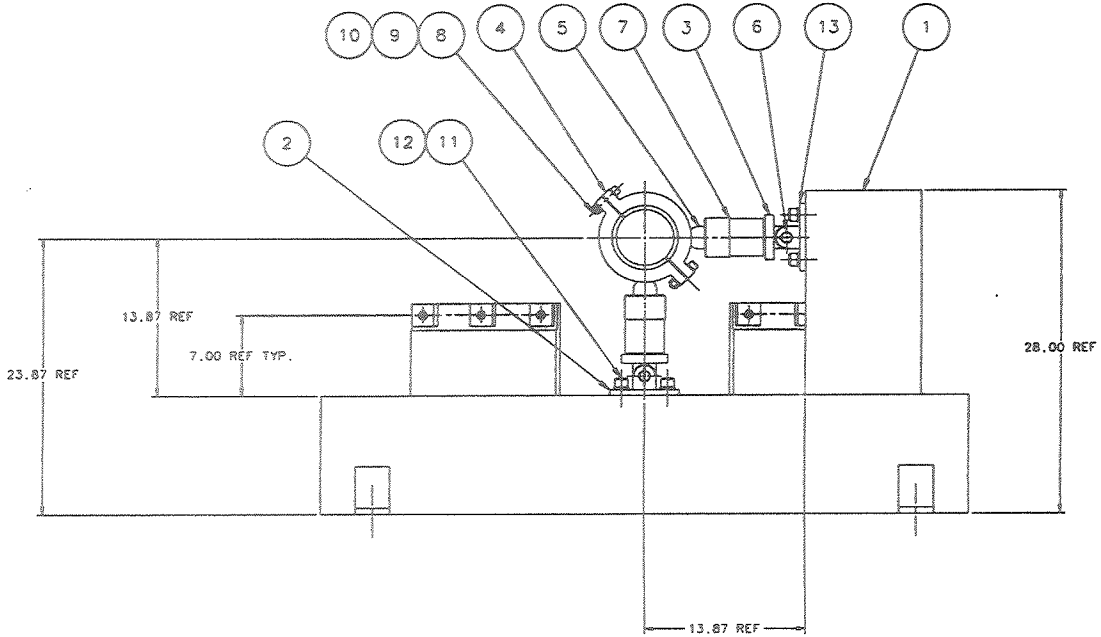

ITEM	PART NO.	DESCRIPTION OR SIZE	QTY
13	MC-332621	CYLINDER POST BASE PIVOT	1
12		STD. .750 LOCK WASHER STEEL	8
11		STD. ALLEN SOC. HD. SCREW STEEL .750-10UNC-2A X 1.00 LG.	4
10		STD. HEX NUT STEEL .500-13UNC-2B	4
9		STD. .500 LOCK WASHER STEEL	8
8		STD. ALLEN SOC. HD. SCREW STEEL .500-13UNC-2A X 2.50 LG.	4
7		HYDRAULIC CYLINDER ENERPACE; CAT NO.RC-251	2
6		QUICK RELEASE PIN STEEL ø1.00 X 3.50 GRIP LG. REID; CAT NO.FPC16035R	2
5	MB-332604	CYLINDER ROD-TIP	2
4	MD-332605	CYLINDER COLLAR	1
3	MC-332602	CYLINDER MOUNTING BASE	2
2	MC-332599	CYLINDER BASE PIVOT	1
1	ME-332615	WELDMENT (L.H.)	1

PARTS LIST

UNLESS OTHERWISE SPECIFIED			ORIGINATOR	E. HAGGARD	8-13-97
.XX	.XXX	ANGLES	DRAWN	S.L. MCREDITH	8-13-97
±.03	±.005	± X	CHECKED	E. HAGGARD	8-97
			APPROVED	E. HAGGARD	8-97

USED ON ME-332617

MATERIAL

FERMI NATIONAL ACCELERATOR LABORATORY
UNITED STATES DEPARTMENT OF ENERGY

COLLIDER DETECTOR FACILITY
END-PLUG EM LIFTING FIXTURE TEST STAND
ASSEMBLY (L.H.)

SCALE	DRAWING NUMBER	SHEET	REV
1:4	2563.52-ME-332618	1 OF 1	A

CREATED WITH I-DEAS MASTER SERIES 7.1 USER NAME: SIMMIE

ER NO. 6102

Plotted Mon Dec 22 13:31:07 CST 1997 by simmie

Section 7. Lifting Procedure

Summary

This section describes the procedure for rolling over the EM detector and specifies the ratings of the various manufactured hardware which must be employed.

10-30-97

Revised 1-12-98 JSK

USE PROCEDURE FOR THE CDF EM LIFTING FIXTURE

Eric Haggard TD/Engr. & Fab.

Layout of the EM Detector Lifting And Rotation Rigging is Fermi Dwg. No. 2563.52-ME-332636.

EM Lifting Fixture Assembly is described in Fermilab Dwg. Number 2563.52-ME-332555.

EM Lifting Fixture Assembly Frame is described in Fermilab Dwg. number 2563.52-ME-332556.

Additional Items Required to Complete this Procedure

- Quantity of 12 special high strength bolts 3/4"-10 with 3/4" grade 8 washers. See Engineering Note for description and specifications.
- Quantity of 8 Plate No.-6 Spacer Block, MB-332639
- Quantity of 4 Stem spacer, MB-332573
- torque Wrench or wrenching system capable of 650 ft-lb
- PPD Lifting Fixture RD10
- Quantity of 2 Wire Rope, 1 1/8" diameter, Sakash Co. Mfr.
- Quantity of 2 manual come-alongs rated at 1.5 tons each, minimum 5' chain length
- Quantity of 2 manual come-alongs rated at 1.5 tons each, minimum 8' chain length
- Quantity of 1 Anchor shackle rated at greater than 22 tons
- Quantity of 2 Anchor shackles rated at greater than 15 tons
- Quantity of 2 Anchor shackles rated at greater than 1.5 tons with a 2" throat
- Quantity of 4 Anchor shackles rated at greater than 1.5 tons
- Quantity of 4 hoist rings, 0.5" dia bolt, rated at greater than or equal to 1.5 tons
- This document

GENERAL PROCEDURE FOR RIGGING FOR HORIZONTAL TRANSPORT

1. Attach the 4 hoist rings to each of the holes marked 'A' and 'B'.

2. Attach the spreader bar, RD10, to a Crane (rated at ≥ 15 tons) with the 22 ton anchor shackle.

3. Attach the special 15,000# rated wire slings to the spreader bar using 15 ton min. anchor shackles. (1.75" diameter holes at 144" apart on the spreader bar, labeled numbers 1 and 12)

4. Grease the pivot points of the EM lifting fixture with a suitable heavy grease.

5. Fly the spreader bar above the EM lifting fixture and lower the spreader enough to slip the large loops of the wire slings on the pivot points of the EM Lifting Fixture.

6. Slip the wire rope loops over the end of the pivots and install the wire retainer split coupling to the pivot shafts.

7. Attach the 2 anchor shackles, 1.5 ton minimum, 2" throat to spreader bar holes 2 and 11.

8. Attach the 4 anchor shackles, 1.5 ton minimum, to the shackles in spreader bar holes 1, 2, 11 and 12. The shackles attached to the main shackles in holes 1 and 12 should be attached to the side of the wire rope which hole "A" is on.

9. Attach the 2 come-alongs with 8 ft minimum of chain between hole "A" hoist ring and the shackle system on holes 1 and 12.

10. Attach the 2 come-alongs with 5 ft minimum of chain between hole "B" hoist ring and the shackle system on holes 2 and 11. Snug the 4 come-alongs.

11. Pick up the lifting fixture and fly it to the EM Detector Assembly. Gently and slowly lower the lifting fixture down to the detector. Note that the orientation arrow marked "UP" on the fixture should correspond to the arrow on the front face of the EM Calorimeter. To check, the fixture holes marked "B" should be toward the top of the Calorimeter.

12. Align the fixture with the mounting holes (3/4-10 tapped holes) in the EM detector and install 12 spacers (4 0.75" thk MB-332573, 8 1.5" thk MB-332639), shimming and 12 special high strength bolts, ref. ME 332556. The center of curvature of the marking on the spacer should correspond to the center of the EM calorimeter.

13. Lightly lubricate the threads of the bolts before installation and tighten each of the bolts to 650 ft-lbs.

14. Ref. ME-332555.

You are now ready to lift and transport the EM detector in the horizontal position.

GENERAL PROCEDURE FOR ROLLING OVER THE EM DETECTOR.

1. Complete the Horizontal lift procedure setup. Pick up the EM with the crane at least 5 feet above the floor.

2. Ease tension on the down side come-along (attached to lifting fixture holes "A").

3. Shorten tension on the down side come along (attached to lifting fixture holes "B") to start the rotation.

4. Continue the rotation using the up side come-along. After the up side come-along passes behind the wire rope, rotation continues by letting line out on both the up side and down side pair of come-alongs. Continue until the detector has rotated 90 degrees. Level as required when the EM Calorimeter is in the vertical position.

5. You may now move the detector to the CDF Plug Structure for Installation.

6. After installation of the mounting bolts at the plug structure, the EM Lifting Fixture may be unbolted from the EM detector. Note the fixture <u>can not</u> be raised vertically before being clear of the detector.

7. Righting the lifting fixture can be accomplished by pulling the lifting fixture up using the come-alongs.

REV	DESC	DRAWN / APPD	DATE
	E.R.		
A	REMOVED COME-ALONG ASSY., OPT. SAFTY-LINE, PIVOT-ARM, COUNTER-BALANCE LOAD & REVISIED LIFTING POINTS ADDED RODS	S.L.M.	11-11-97

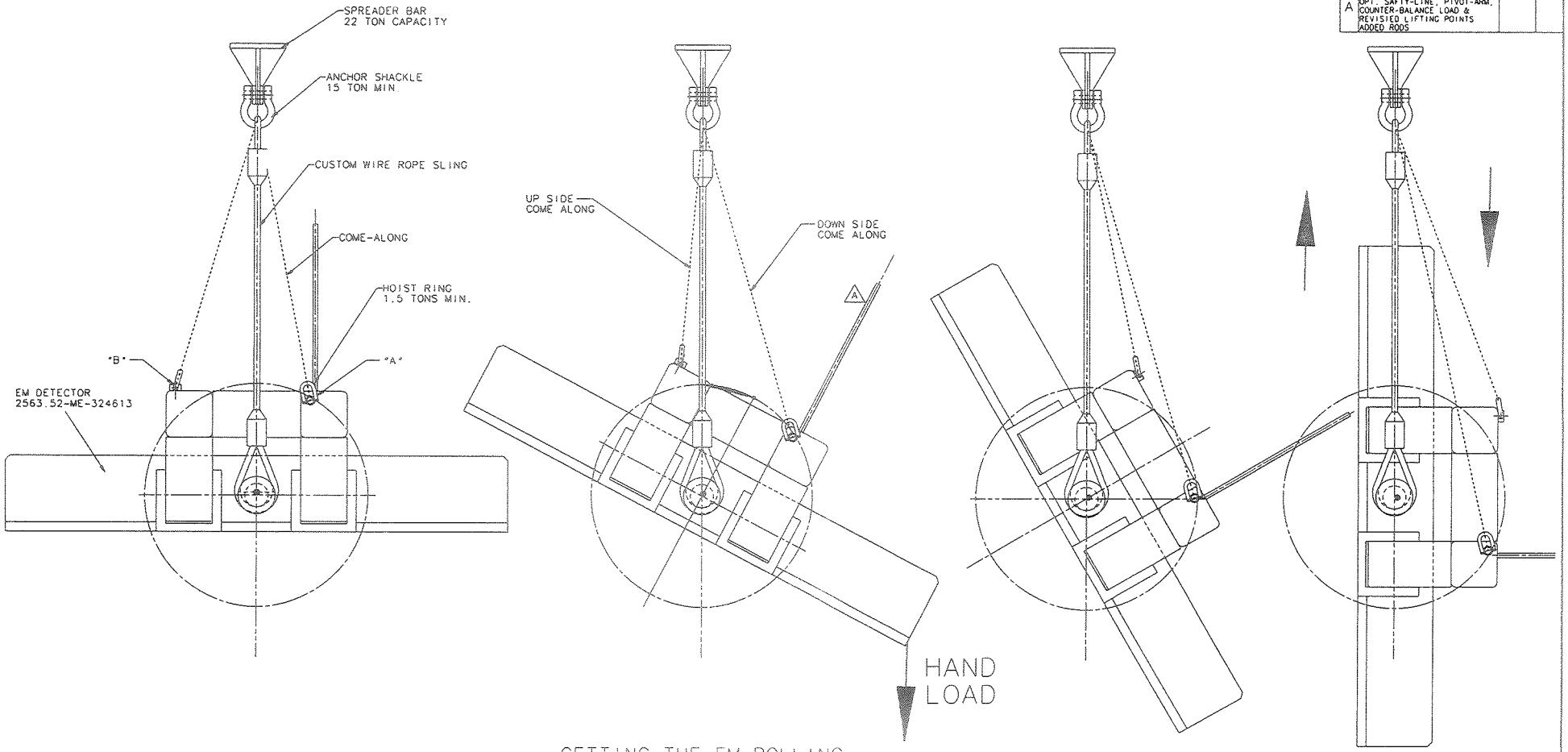

RIGGED FOR HORIZONTAL TRANSPORT

GETTING THE EM ROLLING

THE EM IN FINAL
VERTICAL POSITION

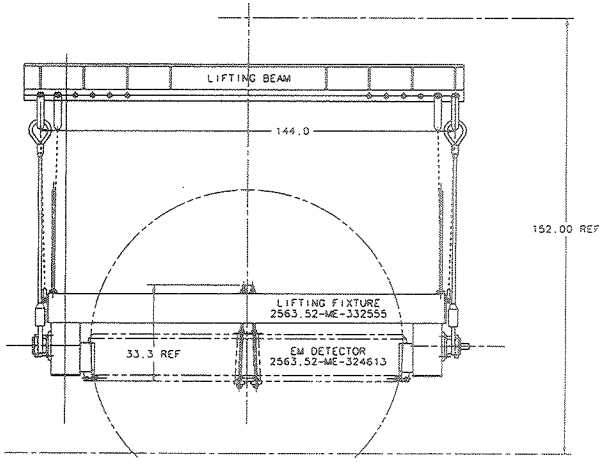

ITEM	PART NO.	DESCRIPTION OR SIZE	QTY
PARTS LIST			

UNLESS OTHERWISE SPECIFIED	ORIGINATOR	E. HAGGARD	10-97
.XX .XXX ANGLES	DRAWN	E. HAGGARD	10-97
± ± ±	CHECKED	E. HAGGARD	10-97
1. BREAK ALL SHARP EDGES .10 MAX	APPROVED	E. HAGGARD	10-97
2. DO NOT SCALE DRAWING	USED ON		
3. DIMENSIONS APPLIED UPON COMPLETION OF FINISH			
4. MAX. ALL MACH. SURFACES	MATERIAL		

FERMI NATIONAL ACCELERATOR LABORATORY
UNITED STATES DEPARTMENT OF ENERGY

COLLIDER DETECTOR FACILITY
END PLUG EM LIFTING FIXTURE
RIGGING CONCEPTUAL DRAWING

SCALE	FILMED	DRAWING NUMBER	REV
1/8		2563.052-ME-332635	A

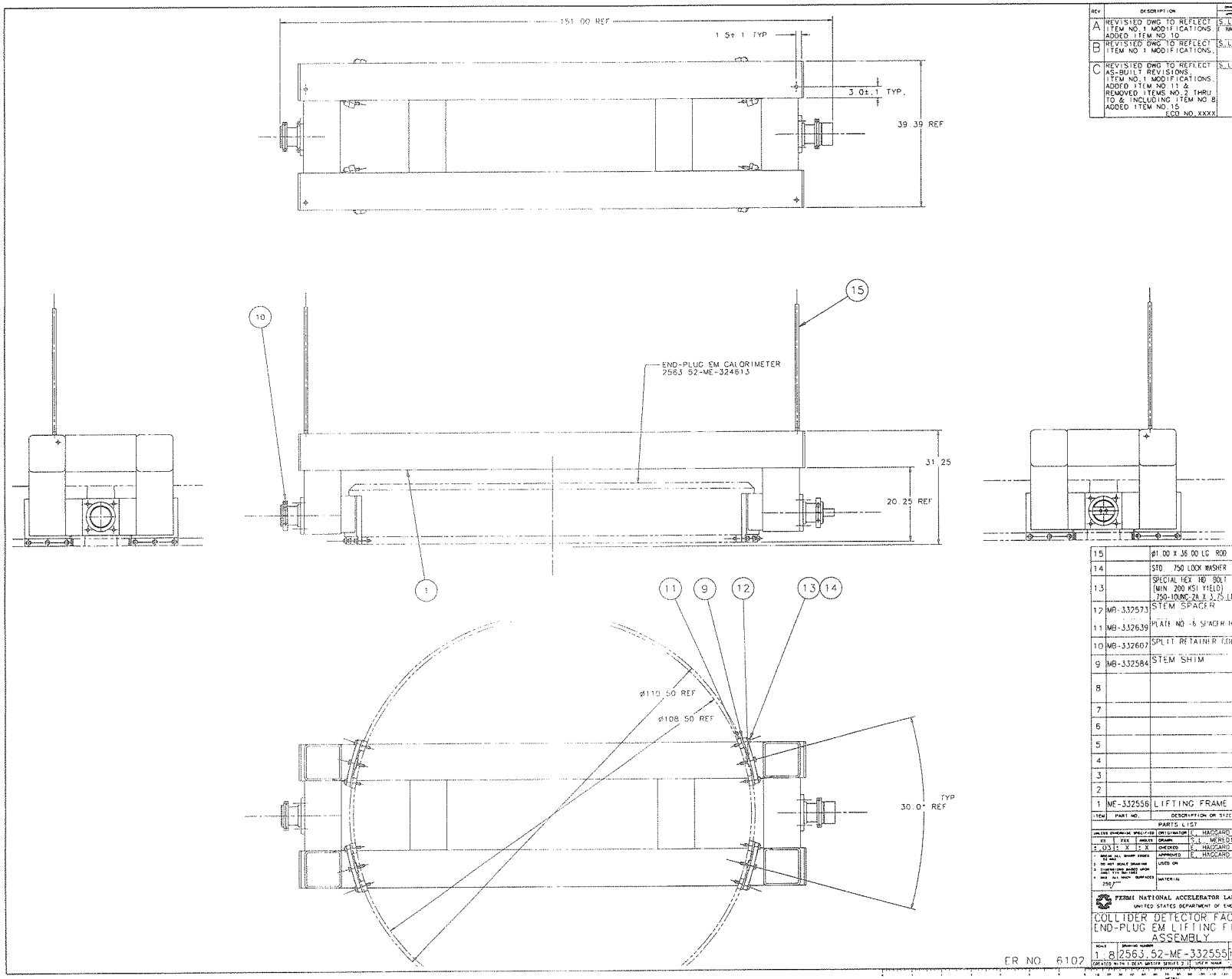

REV	DESCRIPTION	DRAWN APPD	DATE
A	REVISED DWG TO REFLECT ITEM NO.1 MODIFICATIONS. ADDED ITEM NO.10	S.L.M. / E. HAGGARD	7-17-97 / 7-17-97
B	REVISED DWG TO REFLECT ITEM NO.1 MODIFICATIONS.	S.L.M.	8.31.97
C	REVISED DWG TO REFLECT AS-BUILT REVISIONS. ITEM NO.1 MODIFICATIONS. ADDED ITEM NO 11 & REMOVED ITEMS NO.2 THRU TO & INCLUDING ITEM NO.8 ADDED ITEM NO.15 ECO NO. XXXX	S.L.M.	11-12-97

ITEM	PART NO.	DESCRIPTION OR SIZE	QTY
15		ø1.00 X 36.00 LG ROD STL	2
14		STD. .750 LOCK WASHER STL	12
13		SPECIAL HEX HD BOLT STL (MIN 200 KSI YIELD) .750-10UNC-2A X 3.75 LG.	12
12	MB-332573	STEM SPACER	4
11	MB-332639	PLATE NO -6 SPACER BLOCK	8
10	MB-332607	SPLIT RETAINER COLLAR	2
9	MB-332584	STEM SHIM	AS REQ
8			
7			
6			
5			
4			
3			
2			
1	ME-332556	LIFTING FRAME	1

PARTS LIST

UNLESS OTHERWISE SPECIFIED			ORIGINATOR	E. HAGGARD	4-17-97
.XX	.XXX	ANGLES	DRAWN	S.L. MEREDITH	4-17-97
±.03	± .X	± .X	CHECKED	E. HAGGARD	8-13-97
			APPROVED	E. HAGGARD	8-97

1. BREAK ALL SHARP EDGES TO .015
2. DO NOT SCALE DRAWING
3. DIMENSIONS BASED UPON ASME Y14.5M-1982
4. MAX ALL SURFACES 250

USED ON

MATERIAL

FERMI NATIONAL ACCELERATOR LABORATORY
UNITED STATES DEPARTMENT OF ENERGY

COLLIDER DETECTOR FACILITY
END-PLUG EM LIFTING FIXTURE
ASSEMBLY

SCALE	DRAWING NUMBER	SHEET	REV
1:8	2563.52-ME-332555	1 OF 1	C

CREATED WITH I-DEAS MASTER SERIES 2.1 USER NAME: LABRELLA

ER NO. 6102

REV	DESCRIPTION	DRAWN BY	DATE
A	MODIFIED ITEM NO 1 & QTYS OF ITEMS NO 6, 7, 8&9 Ø110.01 WAS 110.05	S. L. M.	7-16-97
B	ADDED WELD SPEC AND NOTE & ITEM NO 4 WAS ME-332627 ECO NO. XXXX	L. HAGGARD	7-16-97
C	REVISED DWG TO REFLECT AS-BUILT REVISION. DELETED ITEM NO 2 (ME-332564), ITEM NO 4 (ME-332627) ITEM NO 5 (ME-332571) & ITEMS NO 7,8&9. Ø111.55 REF WAS 110.01 + 1/32-4	S. L. M.	11-12-97

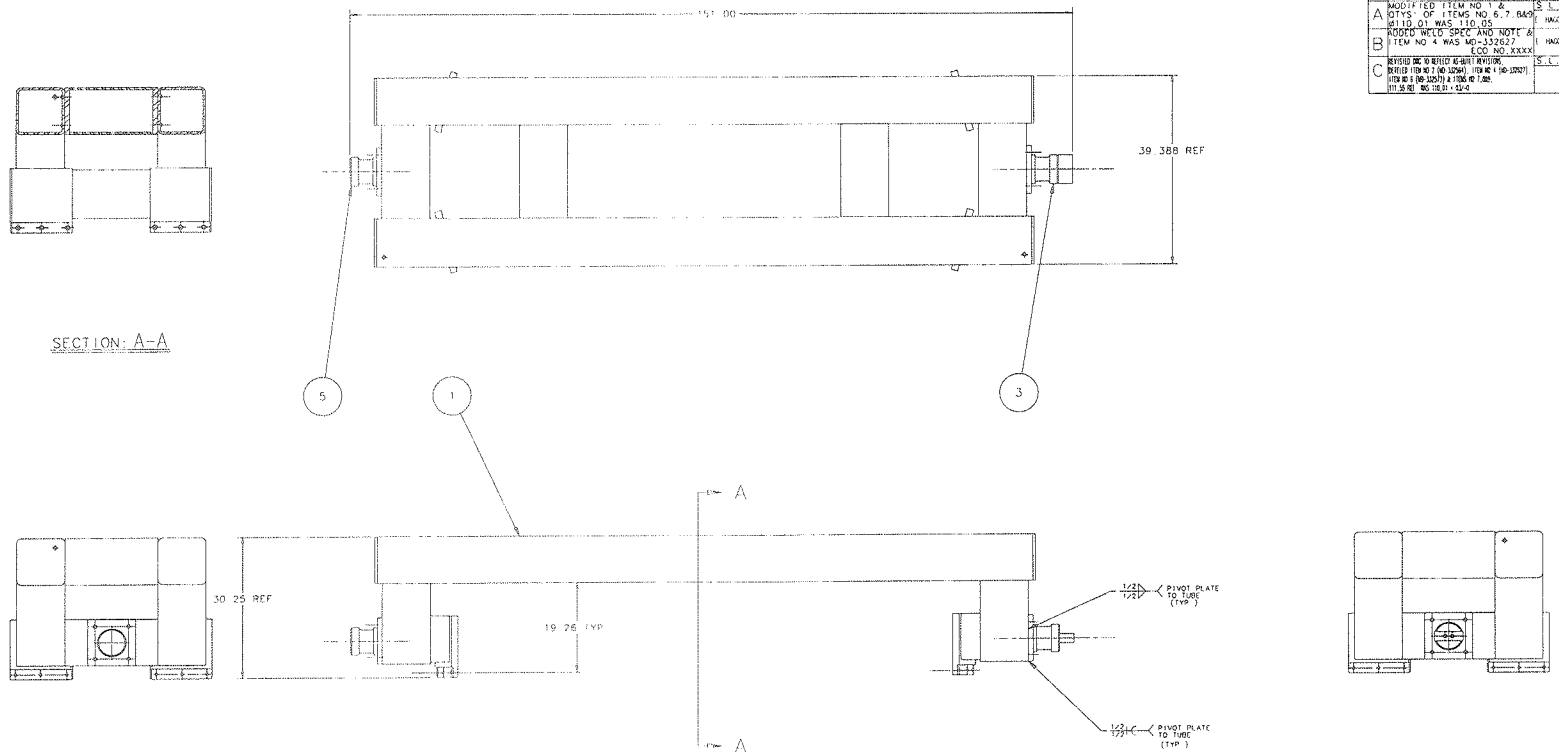

NOTE

ALL WELDING SHALL BE DONE ACCORDING TO FERMILAB PROCEDURE NUMBER 2563.52-SA-332608

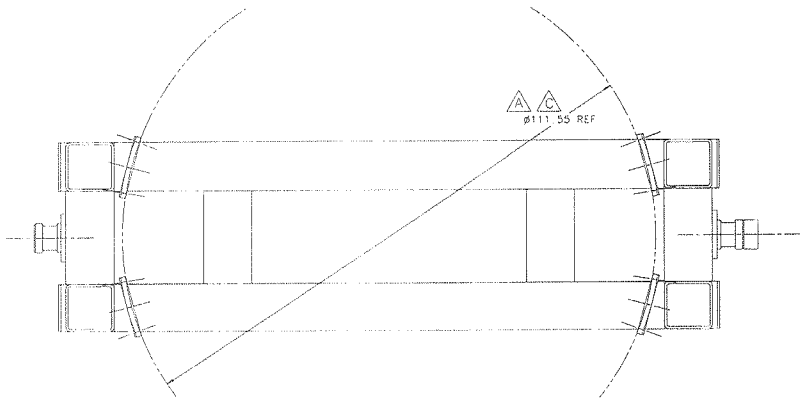

ITEM	PART NO.	DESCRIPTION OR SIZE	QTY
5	ME-332567	STEM PIVOT	1
C 4			
3	ME-332570	LEVER STEM PIVOT	1
C 2			
1	ME-332557	LIFTING FRAME WELDMENT	1

PARTS LIST

UNLESS OTHERWISE SPECIFIED .XX .XXX ANGLES ±.03± X ±.X	ORIGINATOR	E. HAGGARD 11-15-97
	DRAWN	S. L. MERIDITH 11-15-97
	CHECKED	E. HAGGARD 11-17-97
1. DO NOT SCALE DRAWING 2. DIMENSIONS MARKED UPON DRAWING TO BE MET 3. MAX ALL WELD SUPPLIER 250°F	APPROVED	E. HAGGARD 11-97
	USED ON	ME-332555
	MATERIAL	

FERMI NATIONAL ACCELERATOR LABORATORY
UNITED STATES DEPARTMENT OF ENERGY

COLLIDER DETECTOR FACILITY
END-PLUG EM LIFTING FIXTURE
LIFTING FRAME

SCALE	DRAWING NUMBER	SHEET	REV
1 8	2563.52-ME-332556	1 OF 1	C

CREATED WITH I-DEAS MASTER SERIES 7 | USER NAME: LABELLE, L.E.

ER NO. 6102

Section 8. Welding Specification Used in Lifting Fixture Weldments

Summary

This section describes the welding procedure and specification as well as documents the production of the lifting fixture.

REV.	DESCRIPTION	DRAWN	DATE
	E.R. #6102	APPD.	DATE

1. SCOPE
THIS SPECIFICATION COVERS WELDS FOR 2563.52-ME-332556 FOR JOINING OF A500 GRADE B STRUCTURAL STEEL TO 4140 CARBON STEEL AND ALL MILD STEEL WELDS AS DESCRIBED IN DRAWING NUMBER ME-332556

2. MANDATORY REQUIREMENTS

2.1
ALL WELDING JOINTS SHALL BE CLEANED OF SURFACE SCALE AND IMPERFECTIONS BY GRINDING OR MACHINING PRIOR TO WELD

2.2
ALL WELDING ELECTRODES (E-7018 AND 12018-M) SHALL BE STORED IN A ROD OVEN MAINTAINED AT 250 DEGREES FARENHEIT. ALL WELDING ROD EXPOSED TO THE ATMOSPHERE AND NOT USED WITHIN 2 HOURS AFTER BEING REMOVED FROM THE OVEN WILL BE DISCARDED.

2.3
ALL MILD STEEL WELDING SHALL BE DONE WITH AWS TYPE E-7018 ROD.

2.4
ALL 4140 STEEL TO A-500 STRUCTURAL STEEL WELDS SHALL BE WELDED WITH AWS TYPE 12018-M WELDING ROD.

2.5
ALL 4140 STEEL PLATES SHALL BE PREHEATED TO 450-550 DEGREES FARENHEIT BEFORE WELDING WILL OCCUR.

2.6
ALL 4140 STEEL PLATES SHALL MAINTAIN INTERPASS TEMPERATURES AT 450-550 DEGREES FARENHEIT.

2.7
ALL 4140 STEEL PLATES SHALL BE POST HEATED AT 600-650 DEGREES FARENHEIT BY WRAPPING WELDMENT WITH SUITABLE INSULATION FOR SLOW COOL DOWN TO PREVENT CRACKING

2.8
ALL WELDING SHALL BE DONE WITH STRINGER BEAD PASSES REMOVING WELD SLAG BEFORE STARTING NEXT PASS

2.9
ALL WELDS SHALL BE DYE PENETRANT TESTED IN ACCORDANCE WITH AWS B2.1-84 APPENDIX F

3. RECOMMENDED REQUIREMENTS

3.1
DOCUMENTATION OF THE WELD PARAMETERS MAY BE RECORDED IN ATTACHED PAGE ENTITLED 'WELDING PROCEDURE SPECIFICATION (WPS)' AND COPIED TO THE ENGINEER FOR INCLUSION IN PROJECT DOCUMENTATION

3.2
DOCUMENTATION OF THE DYE PENETRANT INSPECTION BY QUALIFIED INSPECTOR MAY BE RECORDED IN THE PAGE ENTITLED 'EXAMINATION OF WELDS' AND COPIED TO THE ENGINEER FOR ENCLUSION IN FOR INCLUSION IN PROJECT DOCUMENTATION

ITEM	PART NO.	DESCRIPTION OR SIZE	QTY.

PARTS LIST

UNLESS OTHERWISE SPECIFIED			ORIGINATOR	E. HAGGARD	7-97
.XX	.XXX	ANGLES	DRAWN	E. HAGGARD	7-97
±	±	±	CHECKED	R. HILLER	7/25/97
1. BREAK ALL SHARP EDGES .02 MAX.			APPROVED	E. HAGGARD	7/29/97
2. DO NOT SCALE DRAWING			USED ON		
3. DIMENSIONS BASED UPON ANSI Y14.5M-1982					
4. MAX. ALL MACH. SURFACES			MATERIAL	ME-332556	

FERMI NATIONAL ACCELERATOR LABORATORY
UNITED STATES DEPARTMENT OF ENERGY

COLLIDER DETECTOR FACILITY
END-PLUG EM LIFTING FIXTURE
WELDING SPECIFICATION

SCALE	FILMED	DRAWING NUMBER	REV.
		2563.52-SA-332608	

CREATED WITH I-DEAS MS1.3b | USER NAME: HAGGARD

EXAMINATION OF WELDS

Project CDF END-PLUG LIFTING FIXTURE - FRAME WELDMENT

Quality requirements — section no. _____

Reported to _____

WELD LOCATION AND IDENTIFICATION SKETCH

DYE PENETRANT INSPECTION

2563-52-ME-332557

IN ACCORDANCE WITH

AWS B2.1-84 APPENDIX F

Date	Weld Identification	Area	Interpretation		Repairs		Remarks
			Accept.	Reject	Accept.	Reject	

We, the undersigned, certify that the statements in this record are correct and that the welds were prepared and tested in accordance with the requirements of the American Welding Society ANSI/AWS D1.1, (_____) Structural Welding Code-Steel.
year

Inspector _____

Test date _____

Manufacturer or contractor _____

Authorized by _____

Date _____

Appendix F
Penetrant Examination Procedure

F1. General

This Appendix describes the method which shall be employed when liquid penetrant examination is specified in Section 2 or 3. This procedure is substantially in conformance with ASTM E165, *Recommended Practice for Liquid Penetrant Inspection.* Refer to this Standard for additional details.

F2. Method

A visible solvent removable penetrant shall be used.

F3. Procedure

F3.1 Cleaning. Cleanliness in this application shall be the removal of all rust, scale, welding flux, spatter, grease, oily films, water, dirt, etc., from the surface to be examined.

F3.2 Drying. The surface to be examined shall be allowed to dry for a minimum of 2 minutes prior to application of penetrant.

F3.3 Penetrant Application. The penetrant is applied by brushing or spraying. The penetration time shall be at least 5 minutes. The temperature of the surface to be examined, the liquid penetrant, the cleaner, and the developer shall not be below 40°F (5°C) nor above 125°F (52°C) throughout the examination period.

F3.4 Excess Penetrant Removal. After a minimum of 5 minutes penetration time has elapsed, any penetrant remaining on the surface shall be removed. Penetrants shall be removed from the surface by wiping with rags or cloths moistened with the solvent.

F3.5 After excess penetrant removal, the developer shall be sprayed on the surface to be examined. The developer coating shall be applied lightly and uniformly.

F4. Examination

It is recommended to conduct the examination 7 minutes or more after applying the developer. In no case shall the examination be made later than 30 minutes after the developer has been applied.

CDF END-PLUG LIFTING FIXTURE
FRAME WELDMENT

WELDING PROCEDURE SPECIFICATION (WPS)

Identification # 2563.52-ME-332557
Revision LATEST Date 8-1-97 By SIMMUE
Authorized by [illegible] Date 8-1-97

Company Name FERMILAB
Welding Process(es) SMAW
Supporting PQR No.(s)

Type - Manual (X) Semi-Automatic ( )
Machine ( ) Automatic ( )

JOINT DESIGN USED
Type FILLET / GROOVE
Single ( ) Double Weld ( )
Backing Yes ( ) No (X)
Backing Material N/A
Root Opening Root Face Dimension .090
Groove Angle 30° - 60° Radius (J-U) N/A
Back Gouging: Yes ( ) No (X) Method

BASE METALS
Material Spec. ASTM 500 / 4140 HTLA
Type or Grade
Thickness Groove .420 Fillet .420
Diameter (Pipe) N/A

FILLER METALS
AWS Specification 12018-M
AWS Classification A5.5

SHIELDING
Flux X Gas
Composition
Electrode-Flux (Class) Flow Rate
Gas Cup Size

PREHEAT
Preheat Temp., Min. 450°F
Interpass Temp., Min 450°F Max 550°F

POSITION
Position of Groove FLAT Fillet X
Vertical Progression: Up (X) Down ( )

ELECTRICAL CHARACTERISTICS
Transfer Mode (GMAW) Short-Circuiting ( )
Globular ( ) Spray ( )
Current: AC ( ) DCEP (X) DCEN ( ) Pulsed ( )
Other

TECHNIQUE
Stringer or Weave Bead STRINGER
Multi-pass or Single Pass (per side) MULTI-PASS
Number of electrodes 1/8 DIA & 5/32 DIA
Electrode Spacing Longitudinal
Lateral
Angle

Contact Tube to Work Distance
Peening
Interpass Cleaning: CHIPPING & WIRE BRUSHING

POSTWELD HEAT TREATMENT
Temp. 600°F TO 650°F
Time WRAP FOR SLOW COOL DOWN

WELDING PROCEDURE

Pass or Weld Layer(s)	Process	Filler Metals		Current		Volts	Travel Speed	Joint Details
		Class	Diam.	Type & Polarity	Amps or Wire Feed Speed			ATTACHED PRINT

CDF END-PLUG EM LIFTING FIXTURE FRAME WELDMENT

PROCEDURE

REFERENCE ONLY

ALL WELDING JOINTS SHALL BE CLEANED OF SURFACE SCALE & IMPERFECTIONS BY GRINDING OR MACHINING.

ALL WELDING ELECTRODES (E-7018 AND 12018-M) SHALL BE STORED IN A ROD OVEN MAINTAINED AT 250°F. DISCARD ELECTRODES NOT USED WITHIN 2 HOURS AFTER BEING REMOVED FROM OVEN.

ALL MILD STEEL WELDING SHALL BE DONE WITH E-7018 ROD.

ALL 4140 PLATE SHALL BE WELDED WITH 12018-M

ALL 4140 PLATES SHALL BE PREHEATED 450°F to 550°F

ALL 4140 PLATES SHALL MAINTAIN INTERPASS TEMPERATURES AT 450° to 550°F

ALL 4140 PLATES SHALL BE POST HEATED AT 600°F TO 650°F WRAPPING WELDMENT FOR SLOW COOL DOWN TO PREVENT CRACKING

ALL WELDING SHALL BE DONE WITH STRINGER BEAD PASSES REMOVING WELD SLAG BEFORE STARTING NEXT PASS

ALL WELDS SHALL BE DYE PENETRANT TESTED IN ACCORDANCE WITH AWS B2.1-84 APPENDIX F

APPROVAL _____

REFERENCE ASM HANDBOOK, VOL. 6, 1993

CDF END-PLUG LIFTING FIXTURE FRAME WELDMENT

WELDING PROCEDURE SPECIFICATION (WPS)

Identification # 2563.52-ME-332557
Revision ____ Date ____ By ____
Authorized by ____ Date ____
Type - Manual (X) Semi-Automatic ( )
Machine ( ) Automatic ( )

Company Name FERMILAB
Welding Process(es) SMAW
Supporting PQR No.(s) ____

JOINT DESIGN USED
Type FILLET / GROOVE
Single ( ) Double Weld ( )
Backing Yes ( ) No (X)
Backing Material N/A
Root Opening ____ Root Face Dimension .090
Groove Angle 30 & 60 Radius (J-U) N/A
Back Gouging: Yes ( ) No (X) Method ____

BASE METALS
Material Spec. ASTM 500 / 4140 HTLA
Type or Grade ____
Thickness Groove .420 Fillet .420
Diameter (Pipe) N/A

FILLER METALS
AWS Specification 120/B-M
AWS Classification A5.5

SHIELDING
Flux X Gas ____
Composition ____
Electrode-Flux (Class) Flow Rate ____
Gas Cup Size ____

PREHEAT
Preheat Temp., Min. 450°F
Interpass Temp., Min 450°F Max 550°F

POSITION
Position of Groove FLAT Fillet X
Vertical Progression: Up (X) Down ( )

ELECTRICAL CHARACTERISTICS
Transfer Mode (GMAW) Short-Circuiting ( )
Globular ( ) Spray ( )
Current: AC ( ) DCEP (X) DCEN ( ) Pulsed ( )
Other ____

TECHNIQUE
Stringer or Weave Bead STRINGER
Multi-pass or Single Pass (per side) MULTI-PASS
Number of electrodes 1/8 Dia & 5/32 Dia
Electrode Spacing Longitudinal ____
Lateral ____
Angle ____
Contact Tube to Work Distance ____
Peening ____
Interpass Cleaning: CHIPPING & WIRE BRUSHING

POSTWELD HEAT TREATMENT
Temp. 600°F TO 650°F
Time WRAP FOR SLOW COOL DOWN

WELDING PROCEDURE

Pass or Weld Layer(s)	Process	Filler Metals		Current		Volts	Travel Speed	Joint Details
		Class	Diam.	Type & Polarity	Amps or Wire Feed Speed			ATTACHED PRINT

Page 0001 07-28-97 P I C K I N G T I C K E T

Order-#: 121510 Order-date: 07/28/97 Warehouse: MIP-ARC

Sold to: AFCO GAS-TECH
~~PO BOX 1919~~
~~INDIANAPOLIS, IN 46220~~

Ship to: FERM-U-LAB TO PICK UP
TUESDAY 7-29-97

P.O.#: 4935

Cust-#: 623800 Terms: NET 30 PPD&ADD Sales rep: N/A

Ship-via: PICK UP Date-to-ship: ASAP Date-shipped: _____

Loc COD	LIN #	Item NUMBER	Item Description	Qty Ordered	Qty To-ship	SHIP TOTAL
	001	25-510181-8	AA 12018 1/8X14X50#HS	100.00	100.0	
	002	25-510531-4	AA 12018 5/32X14X50#HS	100.00	100.0	
2 Line items			Totals:	200.00	200.0	

This Memorandum is an acknowledgment that a Bill of Lading has been received and is not the Original Bill of Lading nor a copy or duplicate covering the property named herein, and is intended solely for filing or record.

RECEIVED, subject to the classifications and lawfully filed tariffs in effect on the date of the receipt by the carrier of the property described in the Original Bill of Lading

Shipper's No. 121510

PICK UP **(Name of Carrier)** **Carrier's No.**

(SCAC)

At 1700 TIMBERCREST RD ELK GRV, IL 60007 19 97 From UTI-ARC, INC

the property described below, in apparent good order, except as noted (contents and condition of contents of packages unknown), marked, consigned and destined as indicated below, which said carrier (the word carrier being understood throughout this contract as meaning any person or corporation in possession of the property under the contract) agrees to carry to its place of delivery at said destination, if on its route, otherwise to deliver to another carrier on the route to said destination. It is mutually agreed, as to each carrier of all or any of said property over all or any portion of said route to destination, and as to each party at any time interested in all or any of said property, that every service to be performed hereunder shall be subject to all the terms and conditions of the Uniform Domestic Straight Bill of Lading set forth (1) in Official, Southern, Western and Illinois Freight Classifications in effect on the date hereof, if this is a rail or a rail-water shipment, or (2) in the applicable motor carrier classification or tariff if this is a motor carrier shipment.

Shipper hereby certifies that he is familiar with all the terms and conditions of the said bill of lading, including those on the back thereof, set forth in the classification or tariff which governs the transportation of this shipment, and the said terms and conditions are hereby agreed to by the shipper and accepted for himself and his assigns.

ON COLLECT ON DELIVERY SHIPMENTS THE LETTERS "COD" MUST APPEAR BEFORE CONSIGNEE'S NAME - - OR AS OTHERWISE PROVIDED IN ITEM 430, SEC. 1

CONSIGNED TO AND DESTINATION

FERN II LAB TO PICK UP
TUESDAY 7-29-97

Mail or street address of Consignee for purposes of notification only

Route

Delivery Address ★

(★ To be filled in only when shipper desires and governing lawfully filed tariffs provide for delivery thereat.)

Delivering Carrier PICK UP

Car or Vehicle Initials No.

No. Packages	★ HM	Kind of Package, Description of Articles, Special Marks, and Exceptions	*Weight (Sub to Cor.)	Class or Rate	Check Column
2		ITEM-# 197060 SUB-1	500#		
		MILD STEEL WELDING ROD			
		F.O.B. ELK GROVE VILLAGE, IL 60007			
		ORDER NUMBER P/O NUMBER			
		121510 4335			
		PART OF AN AGGREGATE TENDER			
		CONSISTING OF SHIPMENTS			
		TOTALING IBS.			

PU 8/4/97
Wuerth
7/29/97

Subject to Section 7 of Conditions of applicable bill of lading, if this shipment is to be delivered to the consignee without recourse on the consignor, the consignor shall sign the following statement:
The carrier shall not make delivery of this shipment without payment of freight and all other lawful charges.

(Signature of Consignor.)

If charges are to be prepaid, write or stamp here, "To be Prepaid."

PREPAID

Received $ to apply in prepayment of the charges on the property described hereon.

Agent or Cashier

Per
(The signature here acknowledges only the amount prepaid.)

Collect On Delivery $ and remit to

C. O. D. Charge to be paid by { Shipper ☐ Consignee ☐

Charges Advanced: $

*If the shipment moves between two ports by a carrier by water, the law requires that the bill of lading shall state whether it is carrier's or shipper's weight.
NOTE—Where the rate is dependent on value, shippers are required to state specifically in writing the agreed or declared value of the property.
The agreed or declared value of the property is hereby specifically stated by the shipper to be not exceeding
per

†"The fibre containers used for this shipment conform to the specifications set forth in the box maker's certificate thereon, and all other requirements of Rule 41 of the Uniform Freight Classification and Rule 5 of the National Motor Freight Classification." †Shipper's imprint in lieu of stamp, not a part of bill of lading approved by the Interstate Commerce Commission.

"This is to certify that the above named materials are properly classified, described, packaged, marked and labeled, and are in proper condition for transportation, according to the applicable regulations of the Department of Transportation."

Shipper Agent

Per Per

Permanent post-office address of shipper.

*MARK WITH "X" TO DESIGNATE HAZARDOUS MATERIAL AS DEFINED IN TITLE 49 OF FEDERAL REGULATIONS.

3

WELDING PROCEDURE SPECIFICATION (WPS) Yes ( )
PREQUALIFIED _____ QUALIFIED BY TESTING _____
or PROCEDURE QUALIFICATION RECORD (PQR) Yes ( )

Identification # MC-332564
Revision _____ Date _____ By _____
Authorized by _____ Date _____

Company Name Fermi
Welding Process(es) SMAW
Supporting PQR No. (s) _____

Type - Manual (✓) Semi-Automatic ( )
Machine ( ) Automatic ( )

JOINT DESIGN USED
Type Vee
Single ( ) Double Weld ( ) MULTI
Backing Yes ( ) No ( )
Backing Material NONE
Root Opening _____ Root Face Dimension 090
Groove Angle 60° Radius (J-U) Vee
Back Gouging: Yes ( ) No (X) Method _____

BASE METALS
Material Spec. A-500/4140
Type or Grade _____
Thickness Groove 60° Fillet _____
Diameter (Pipe) _____

FILLER METALS
AWS Specification 12018-M
AWS Classification A5.5

SHIELDING
Flux Y Gas _____
Composition _____
Electrode-Flux (Class) Flow Rate _____
Gas Cup Size _____

PREHEAT
Preheat Temp., Min. 450°
Interpass Temp., Min 450° Max 650°

POSITION
Position of Groove Flat Fillet _____
Vertical Progression: Up ( ) Down ( )

ELECTRICAL CHARACTERISTICS
Transfer Mode (GMAW) Short-Circuiting ( )
Globular ( ) Spray ( )
Current: AC ( ) DCEP (X) DCEN ( ) Pulsed ( )
Other _____

TECHNIQUE
Stringer or Weave Bead Stringer
Multi-pass or Single Pass (per side) MULTI
Number of electrodes 1/8 & 5/32
Electrode Spacing Longitudinal _____
Lateral _____
Angle _____

Contact Tube to Work Distance _____
Peening NONE
Interpass Cleaning: Chipping & Wire Brush

POSTWELD HEAT TREATMENT
Temp. 600° to 650°F
Time 1 hour

WELDING PROCEDURE

Pass or Weld Layer(s)	Process	Filler Metals Class (1201B-M)	Filler Metals Diam.	Current Type & Polarity	Current Amps or Wire Feed Speed	Volts	Travel Speed
1	SMAW	A.5.5	1/8	DC-REV	145		
2	SMAW	A.5.5	5/32	DC-REV	180		
3	" "	" "	5/32	DC-REV	180		
4	" "	" "	5/32	DC-REV	180		
5	" "	" "	5/32	DC-REV	175		
6	" "	" "	5/32	DC-REV	175		

Joint Details

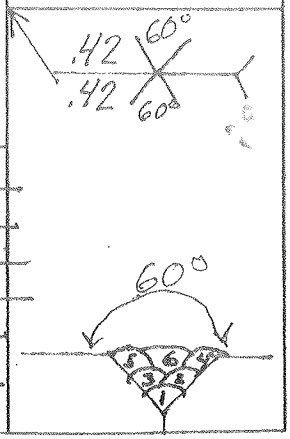

Form E-1 (Front)

WELDING PROCEDURE SPECIFICATION (WPS) Yes ( )
PREQUALIFIED _____ QUALIFIED BY TESTING _____
or PROCEDURE QUALIFICATION RECORD (PQR) Yes ( )

Identification # MC-332564
Revision _____ Date _____ By _____
Authorized by _____ Date _____

Company Name Fermi
Welding Process(es) SMAW
Supporting PQR No.(s) _____

Type - Manual (X) Semi-Automatic ( )
Machine ( ) Automatic ( )

JOINT DESIGN USED
Type Fillet / SINGle Bevel V 30°
Single ( ) Double Weld ( )
Backing Yes ( ) No (X)
Backing Material _____
Root Opening _____ Root Face Dimension .090
Groove Angle 30° Radius (J-U) ✓
Back Gouging: Yes ( ) No (X) Method _____

BASE METALS
Material Spec. A-500 / 4140
Type or Grade _____
Thickness Groove _____ Fillet .42
Diameter (Pipe) _____

FILLER METALS
AWS Specification 12018-M
AWS Classification A5.5

SHIELDING
Flux X Gas _____
Composition _____
Electrode-Flux (Class) Flow Rate _____
Gas Cup Size _____

PREHEAT
Preheat Temp., Min. 450°F
Interpass Temp., Min 450° Max 650°

POSITION
Position of Groove 1 Fillet FIAT
Vertical Progression: Up ( ) Down ( )

ELECTRICAL CHARACTERISTICS
Transfer Mode (GMAW) Short-Circuiting ( )
Globular ( ) Spray ( )
Current: AC ( ) DCEP (X) DCEN ( ) Pulsed ( )
Other _____

TECHNIQUE
Stringer or Weave Bead Stringer
Multi-pass or Single Pass (per side) MULTI
Number of electrodes 1/8 + 5/32 DIA.
Electrode Spacing Longitudinal _____
Lateral _____
Angle _____

Contact Tube to Work Distance _____
Peening _____
Interpass Cleaning: Chipping + WIRE Brush

POSTWELD HEAT TREATMENT
Temp. 600° ~ 650° F
Time 1 HOUR

WELDING PROCEDURE

Pass or Weld Layer(s)	Process	Filler Metals Class (12018-M)	Filler Metals Diam.	Current Type & Polarity	Current Amps or Wire Feed Speed	Volts	Travel Speed
1	SMAW	A5.5	1/8	DC-REV	153		
2	" "	" "	1/8	DC-REV	150		
3	" "	" "	5/32	DC-REV	180		
4	" "	" "	5/32	DC.REV	180		
5	" "	" "	5/32	D.C REV	180		
6	" "	" "	5/32	DC.REV	180		
7	" "	" "	1/8	DC.REV	150		

Joint Details

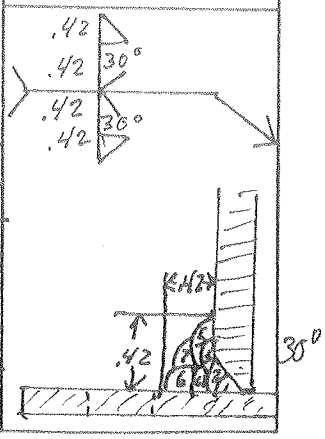

Form E-1 (Front)

Project C.D.F. Lifting fixture ME-332556
Quality requirements — section no. NO VIS. CRACKS
Reported to

WELD LOCATION AND IDENTIFICATION SKETCH

MC.332564 Center Post Cross Brace

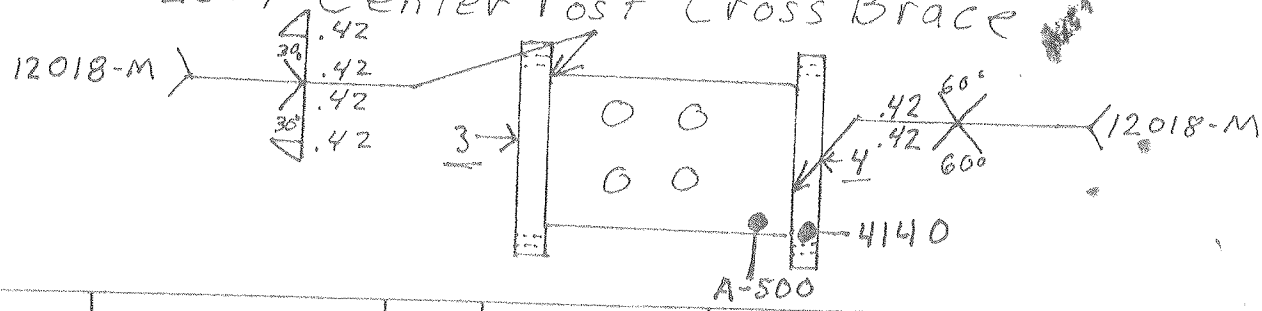

	Date	Weld identification	Area	Interpretation Accept.	Interpretation Reject	Repairs Accept.	Repairs Reject	Remarks
3		Fillet		X				
		V-Groove		X				END MARKED 3
4		Fillet		X				
		V-Groove		X				END MARKED 4

We, the undersigned, certify that the statements in this record are correct and that the welds were prepared and tested in accordance with the requirements of the American Welding Society ANSI/AWS D1.1, (_____ year) Structural Welding Code-Steel.

Inspector Michael Reynolds

Test date 8/9/97

Method of inspection: DYE PENETRANT

☐ Dry ☐ Wet ☐ Residual ☐ Continuous

☐ AC ☐ DC ☐ Half-wave

Manufacturer or contractor

Authorized by

Date

Form E-8

© 1978 by American Welding Society. All rights reserved.

WELDING PROCEDURE SPECIFICATION (WPS) Yes ( )
PREQUALIFIED _____ QUALIFIED BY TESTING _____
or PROCEDURE QUALIFICATION RECORD (PQR) Yes ( )

Identification # ME 332556+57
Revision _____ Date _____ By _____
Authorized by _____ Date _____
Type - Manual ( ) Semi-Automatic ( )
Machine ( ) Automatic ( )

Company Name Fermi
Welding Process(es) SMAW
Supporting PQR No.(s) _____

JOINT DESIGN USED
Type Vee/Fillet
Single ( ) Double Weld ( ) MULTI
Backing Yes ( ) No ( )
Backing Material NO
Root Opening _____ Root Face Dimension _____
Groove Angle 60° Radius (J-U) ✓
Back Gouging: Yes ( ) No (X) Method _____

BASE METALS
Material Spec. A-500 / 4140
Type or Grade _____
Thickness Groove _____ Fillet 1/2
Diameter (Pipe) _____

FILLER METALS
AWS Specification 12018-M
AWS Classification A5.5.

SHIELDING
Flux X Gas _____
Composition _____
Electrode-Flux (Class) _____ Flow Rate _____
Gas Cup Size _____

PREHEAT
Preheat Temp., Min. 450°
Interpass Temp., Min 450° Max 650°

POSITION
Position of Groove FLAT Fillet FLAT
Vertical Progression: Up ( ) Down ( )

ELECTRICAL CHARACTERISTICS
Transfer Mode (GMAW) Short-Circuiting ( )
Globular ( ) Spray ( )
Current: AC ( ) DCEP (X) DCEN ( ) Pulsed ( )
Other _____

TECHNIQUE
Stringer or Weave Bead Stringer
Multi-pass or Single Pass (per side) MULTI
Number of electrodes _____
Electrode Spacing Longitudinal _____
Lateral _____
Angle _____

Contact Tube to Work Distance _____
Peening NO
Interpass Cleaning: AIR CHIPPER + WIRE

POSTWELD HEAT TREATMENT
Temp. 600°
Time 1 hr.

WELDING PROCEDURE

Pass or Weld Layer(s)	Process	Filler Metals Class	Filler Metals Diam.	Current Type & Polarity	Current Amps or Wire Feed Speed	Volts	Travel Speed
1	SMAW	A5.5.	1/8	DC REV.	140	—	—
2	SMAW	A5.5	5/32	DC REV	165	—	—
3	SMAW	A5.5	5/32	DC REV	170	—	—
4	SMAW	A5.5	5/32	DC REV	170	—	—
5	SMAW	A5.5	5/32	DC REV	165	—	—

Joint Details

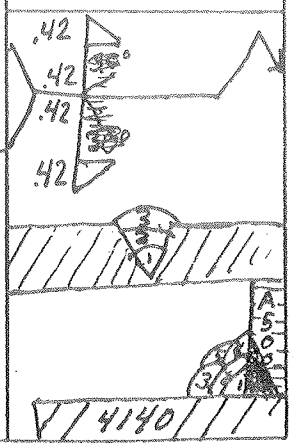

Form E-1 (Front)

Project CDF Lifting Fixture ME 332556
Quality requirements — section no. No vis cracks
Reported to

ME 332557 WELD LOCATION AND IDENTIFICATION SKETCH

STEM + STEM PLATE

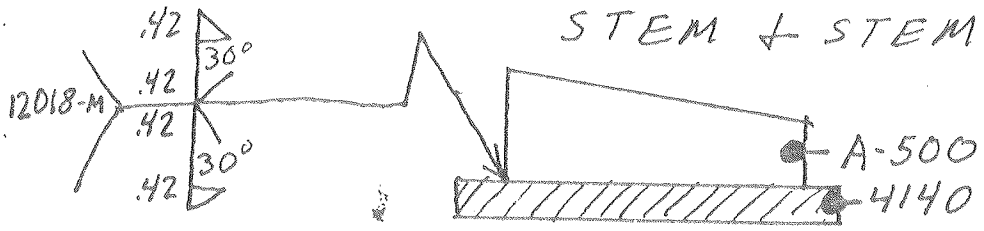

Date	Weld identification	Area	Interpretation		Repairs		Remarks
			Accept.	Reject	Accept.	Reject	
9/24	1 stamped		X				No vis. cracks
9/24	2 stamped		X				No vis. cracks
9/24	3 stamped		X				No vis. cracks
9/24	4 stamed		X				No vis. cracks

We, the undersigned, certify that the statements in this record are correct and that the welds were prepared and tested in accordance with the requirements of the American Welding Society ANSI/AWS D1.1, (_____) Structural Welding Code-Steel.
year

Inspector Michael R. Reynolds

Test date 9/24/97

Method of inspection: Dye Penetrant

☐ Dry ☐ Wet ☐ Residual ☐ Continuous

☐ AC ☐ DC ☐ Half-wave

Manufacturer or contractor

Authorized by

Date

Form E-8

© 1978 by American Welding Society. All rights reserved.

WELDING PROCEDURE SPECIFICATION (WPS) Yes ( )
PREQUALIFIED _____ QUALIFIED BY TESTING _____
or PROCEDURE QUALIFICATION RECORD (PQR) Yes ( )

Identification # MF 332593
Revision _____ Date _____ By _____
Authorized by _____ Date _____

Company Name Fermi
Welding Process(es) SMAW
Supporting PQR No. (s) _____

Type - Manual (X) Semi-Automatic ( )
Machine ( ) Automatic ( )

JOINT DESIGN USED
Type VEE/Fillet
Single ( ) Double Weld (X) MULTI
Backing Yes ( ) No (X)
Backing Material _____
Root Opening _____ Root Face Dimension _____
Groove Angle 30° Radius (J-U) _____
Back Gouging: Yes ( ) No (X) Method _____

BASE METALS
Material Spec. A-500/4140
Type or Grade _____
Thickness Groove 30° Fillet .50
Diameter (Pipe) _____

FILLER METALS
AWS Specification 12018-M
AWS Classification A5.5

SHIELDING
Flux Y Gas _____
Composition _____
Electrode-Flux (Class) Flow Rate _____
_____ Gas Cup Size _____

PREHEAT
Preheat Temp., Min. 450°
Interpass Temp., Min 450° Max 650°

POSITION
Position of Groove Flat Fillet Flat
Vertical Progression: Up ( ) Down ( )

ELECTRICAL CHARACTERISTICS
Transfer Mode (GMAW) Short-Circuiting ( )
Globular ( ) Spray ( )
Current: AC ( ) DCEP (X) DCEN ( ) Pulsed ( )
Other _____

TECHNIQUE
Stringer or Weave Bead Stringer
Multi-pass or Single Pass (per side) Multi
Number of electrodes _____
Electrode Spacing Longitudinal _____
Lateral _____
Angle _____

Contact Tube to Work Distance _____
Peening NONE
Interpass Cleaning: Airchipper + wire brush

POSTWELD HEAT TREATMENT
Temp. 600° + 650°
Time 1 hour

WELDING PROCEDURE

Pass or Weld Layer(s)	Process	Filler Metals Class (12018-)	Filler Metals Diam. (M)	Current Type & Polarity	Current Amps or Wire Feed Speed	Volts	Travel Speed
1	SMAW	A.5.5	1/8	DC-REV	145	–	12018-M
2	SMAW	A5.5	5/32	DC-Rev	165	–	12018-M
3	SMAW	A5.5	5/32	DC-Rev	162	–	
4	SMAW	A5.5	5/32	DC-REV	162	–	
5	SMAW	A5.5	5/32	DC-REV	160	–	

Joint Details

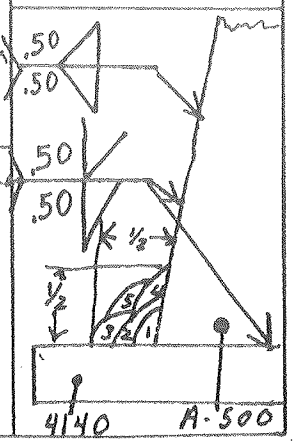

Form E-1 (Front)

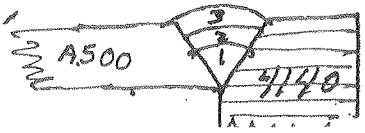

Project CDF Lifting Fixture "Test STAND" - ME 332593
Quality requirements — ~~section no.~~ No VIS. Cracks
Reported to

WELD LOCATION AND IDENTIFICATION SKETCH

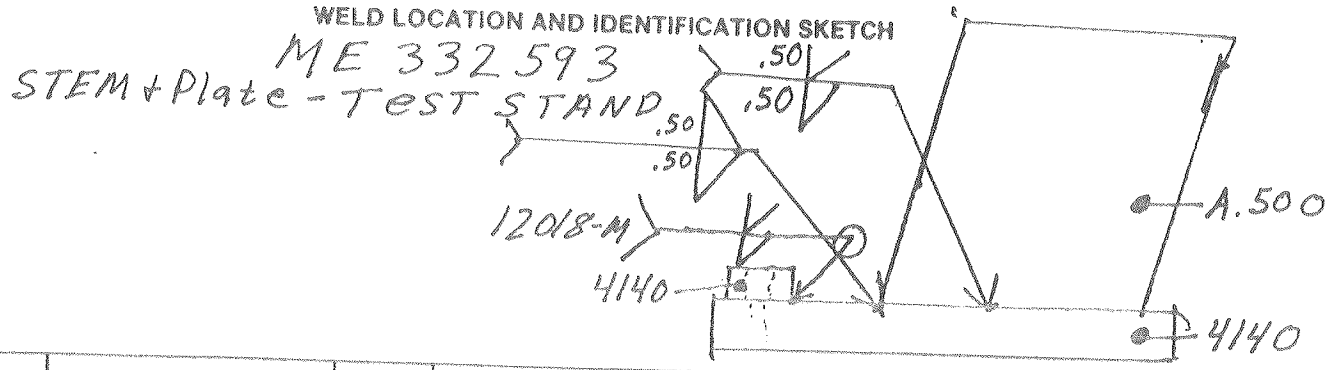

Date	Weld identification	Area	Interpretation		Repairs		Remarks
			Accept.	Reject	Accept.	Reject	
9/30	A STAMPL		X				NO VIS
9/30	B		X				NO VIS
9/30	C		X				NO VIS
9/30	D		X				NO VIS

We, the undersigned, certify that the statements in this record are correct and that the welds were prepared and tested in accordance with the requirements of the American Welding Society ANSI/AWS D1.1, (_____) Structural Welding Code-Steel.
year

Inspector Michael P. Reynolds

Test date 9-30-97

Method of inspection: Dye Pentrant

☐ Dry ☐ Wet ☐ Residual ☐ Continuous

☐ AC ☐ DC ☐ Half-wave

Manufacturer or contractor

Authorized by

Date

Form E-8

© 1978 by American Welding Society. All rights reserved.

Section 9. Preparatory Work On The Ansys Models

Summary

This section describes the analysis which went into acceptance of the model results of the Em Structural models. The important result here was an understanding of the moments and forces which Ansys reported which originally were counter intuitive. The important result was what happened to the moments one expects in a large structure and why they do not correspond to classical mechanics, "stiff body" results. These results and a calculation of the stem plate bending proved that the structural stem plates were the devices which allowed for rotation and relaxed the large classical moments.

JTH 3-2-97

MOMENTS REPORTED BY ANSYS

ANSYS REPORTS NODAL MOMENTS IN THE GLOBAL COORDINATE SYSTEM. THE PROGRAM REPORTS THE MAXIMUM MOMENT DUE TO TOTAL LOADING AND DISREGARDS THE DISTANCE FROM THE SUPPORTS OR REACTION LOADING. TO FIND OUT THE ACTUAL MOMENT AT A PARTICULAR NODE LOCATION THE USER HAS TO MULTIPLY THE MOMENT GIVEN BY THE RATIO OF THE DISTANCE TO THE REACTION POINT OVER THE REACTION POINT TO CM DISTANCE.

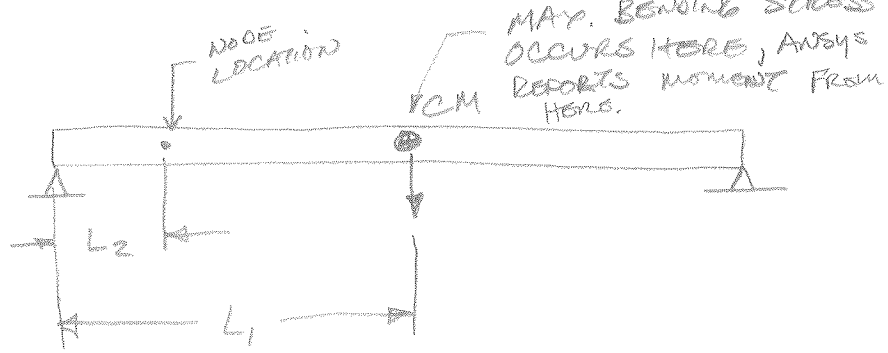

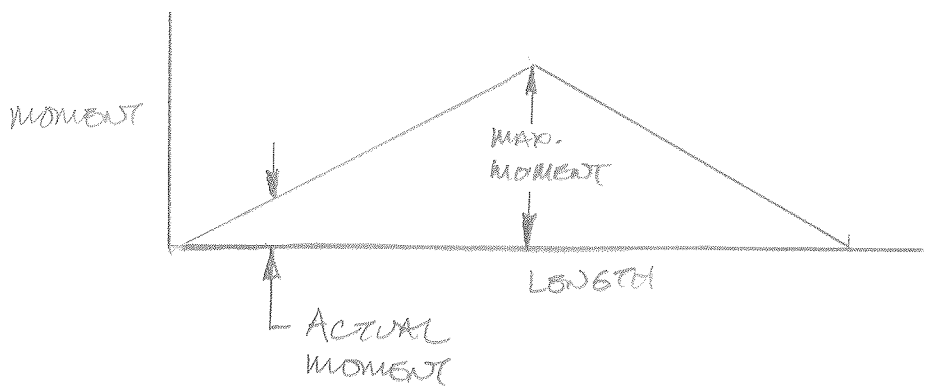

$$M = \frac{L_2}{L_1} M_{MAX}$$

ANSYS REPORTS THE MOMENT AT THE NODE AS

$$M_{NODE} = (L_1 - L_2) \cdot P_{CM}$$

MOMENTS FACTORED BY L_2/L_1 ARE NOTED.

LOAD CASE 1a

NODAL LOADS FOR BOLT LOCATIONS IN GLOBAL COORDINATE SYSTEM

```
PRINT SUMMED NODAL LOADS WITH TOL=       0.

 ***** POST1 SUMMED TOTAL NODAL LOADS LISTING *****

 LOAD STEP=     1  SUBSTEP=     1
  TIME=    1.0000      LOAD CASE=   0

 THE FOLLOWING X,Y,Z SOLUTIONS ARE IN GLOBAL COORDINATES

  NODE      FX          FY          FZ          MX          MY          MZ
   410  -8096.8      2853.0     -7500.0     -12734.     -77218.    -0.52378E-01
   878   8096.6      2853.0     -7500.3     -12734.      77219.     0.52578E-01
  1352  -8096.6     -2853.0     -7500.3      12734.     -77219.     0.52578E-01
  1807   8096.8     -2853.0     -7500.0      12734.      77218.    -0.52378E-01

TOTAL VALUES
VALUE  -0.29054E-07-0.35534E-08 -30001.     0.14564E-05-0.12695E-03 0.39962E-03
```

LOAD CASE 1a

ELEMENT TABLE OUTPUT FOR "BOLT" ELEMENTS. IN ELEMENT COORDINATE SYSTEM

PRINT ELEMENT TABLE ITEMS PER ELEMENT

***** POST1 ELEMENT TABLE LISTING *****

STAT CURRENT ELEM NMIS1	CURRENT Fx' SMIS1 NMIS2	CURRENT Fy' SMIS2	CURRENT Fz' SMIS3	CURRENT Mx' SMIS4	CURRENT My' SMIS5	CURRENT Mz' SMIS6
2261	7082.3	-7500.3	4851.3	-32286.	0.52578E-01	71292.
1616.5	-871.01					
2263	7082.4	-7500.0	-4851.4	32286.	-0.52378E-01	71291.
1616.5	-870.98					
2265	7082.3	-7500.3	4851.3	-32286.	0.52578E-01	71292.
1616.5	-871.01					
2267	7082.4	-7500.0	-4851.4	32286.	-0.52378E-01	71291.
1616.5	-870.98					
MINIMUM VALUES						
ELEM	2265	2265	2263	2261	2263	2267
2263	2265					
VALUE	7082.3	-7500.3	-4851.4	-32286.	-0.52378E-01	71291.
1616.5	-871.01					
MAXIMUM VALUES						
ELEM	2267	2267	2265	2267	2265	2265
2261	2267					
VALUE	7082.4	-7500.0	4851.3	32286.	0.52578E-01	71292.
1616.5	-870.98					

SMIS1 = Fx' = 7082#

SMIS2 = Fy' = 7500#

SMIS3 = Fz' = 4851#

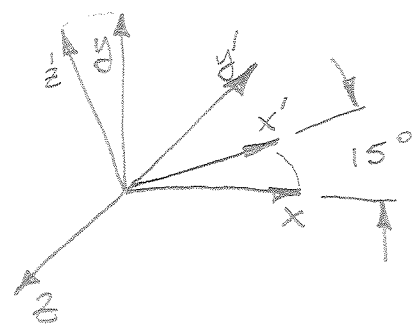

JEH 4-23-97

WHAT DOES ANSYS PREDICT THE PICK POINT LOADING WILL BE?
(ASSUMES RIGID CONNECTION)

FROM LOAD CASE 1a

$F_x = -8096$ $M_x = -12734$
$F_y = 2853$ $M_y = -77218$
$F_z = -7500$ $M_z = 0$

WHY SO LOW?

WHEN VIEWED FROM THE ELEMENT COORDINATE SYSTEM WHICH IS ALIGNED WITH THE ACTUAL JOINT ORTHOGONAL DIRECTIONS

$F_x' = 7082$ $M_x' = 32286$
$F_y' = -7500.3$ $M_y' = 0$
$F_z' = -4851.3$ $M_z' = 71,292$ in-lb

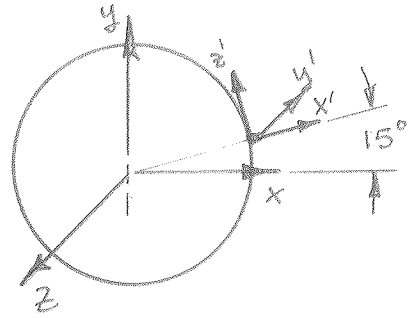

BOLT LOADING FROM CASE 1A RESULTS

$F_x = 8096$
$F_y = 2853$
$F_z = 7500$

$F_x' = 7082$
$F_y' = 7500$
$F_z' = 4851$

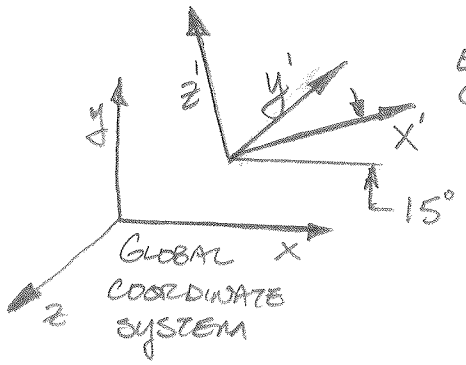

ELEMENT COORDINATE SYSTEM } GENERALLY RADIALLY OUTWARD

LOADING AT THE SHOULDER SCREW JOINT.
AXIS OF THE SHOULDER SCREW IS ALIGNED W/ X' AXIS
ALSO, Z = y' LOADING = 7500#

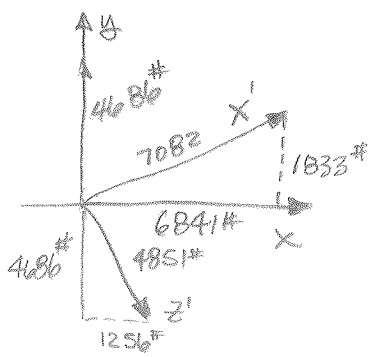

TOTAL y COMPONENTS = 4686#
− 1833#
2853

TOTAL x COMPONENTS = 6841
+ 1256
8097

COMPARED TO NODAL LOADS IN GLOBAL COORDINATES

$F_x = 8096$ $\quad$ $X_{comp} = 8097$
$F_y = 2853$ $\quad$ $y_{comp} = 2853$
$F_z = 7500$ $\quad$ $F_y' = 7500$

SO THE SHEAR LOAD ON THE SHOULDER SCREW ARE THOSE FORCES WHICH ACT ON THE z'-y' PLANE.

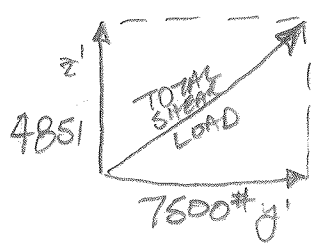

TOTAL SHEAR LOAD = 8935#

JEH 4-23-97

THE QUESTION TO ANSWER IS...

WHY DOES ANSYS REPORT MOMENTS WHICH ARE MUCH REDUCED FROM WHAT WE EXPECT?

FROM STATICS...

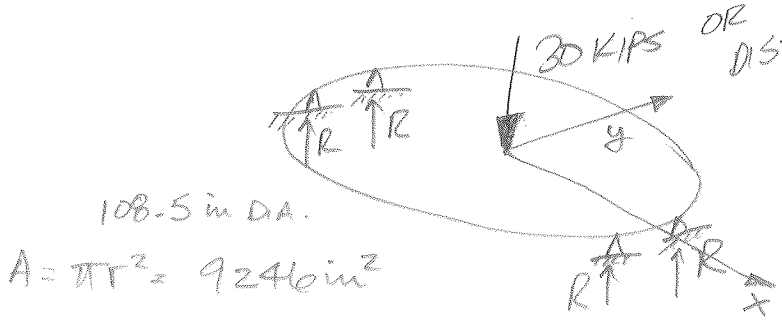

OR UNIFORM PRESSURE DISTRIBUTION OF $\frac{30{,}000^{\#}}{9246\,in^2} = 3.245$ psi

$R = \frac{30}{4} = 7.5$ kips

SO... WHAT ARE THE MOMENTS @ X and Y? TO SOLVE THIS WE CREATED MODELS TO COMPARE WITH CLASSIC SOLUTIONS TO BEAM PROBLEMS. THE DESCRIPTION OF EACH MODEL AND THE HAND CALCULATIONS FOLLOWS AND ARE GENERALLY OF 2 LOAD SCHEMES

1.) POINT LOAD OF 30 KIP CENTRALLY LOCATED

2.) DISTRIBUTED UNIFORM PRESSURE LOADING

RESULTS

(inch-lb.)		CLASSIC BEAM PROBLEMS	24 x 164.8 SIMPLE PLATE ANSYS	SIMPLE PLATE MODEL CORNERS ONLY - ANSYS
POINT LOAD $F_z = 30$ KIPS	M_x in-lb	105,300	88,160	16,111
	M_y in-lb	393,000	391,680	313,750
UNIFORM PRESSURE LOADING $F_z = 9700^{\#}$	M_x (in-lb)	22,605	22,616	7440
	M_y	95,918	84,939	68,553

SEVERAL ANSYS MODELS WERE DONE TO DETERMINE THE SOURCE OF THE MOMENT "SOFTENING" AT THE PICK POINTS.

THE SIMPLE PLATE PROBLEM SHOWS THIS EFFECT DRAMATICALLY. WHEN ONLY THE CORNERS WERE RESTRAINED AGAINST ALL ROTATIONS AND TRANSLATIONS THE MOMENTS ABOUT X WENT FROM 88,160 in-lb TO 16,111 in-lb IN THE POINT LOAD CASE. THIS BEHAVIOR WAS ALSO SEEN IN THE UNIFORM PRESSURE LOAD CASE WERE MOMENTS ABOUT X DROPPED FROM 22,616 in-lb TO 7440 in-lb.

MOMENTS ABOUT Y CHANGED LESS, CASE TO CASE AND ARE THE LARGEST MOMENT FOUND STARTING AT 391,680 AND DECLINING TO 313,750 in-lb. THE UNIFORM PRESSURE LOADING CASE SHOWED A LARGER DECREASE STARTING AT 84,939 in-lb AND FALLING TO 68,553 in-lb IN THE CASE OF UNIFORM DISTRIBUTED LOAD.

IT SHOULD BE NOTED THAT TO ARRIVE AT THE BOLTED JOINT LOADS, THE MOMENTS SHOULD BE DIVIDED OVER TWO LOCATIONS.

JEH 4-23-97

SIMPLE PLATE MODELS ANSYS RESULTS

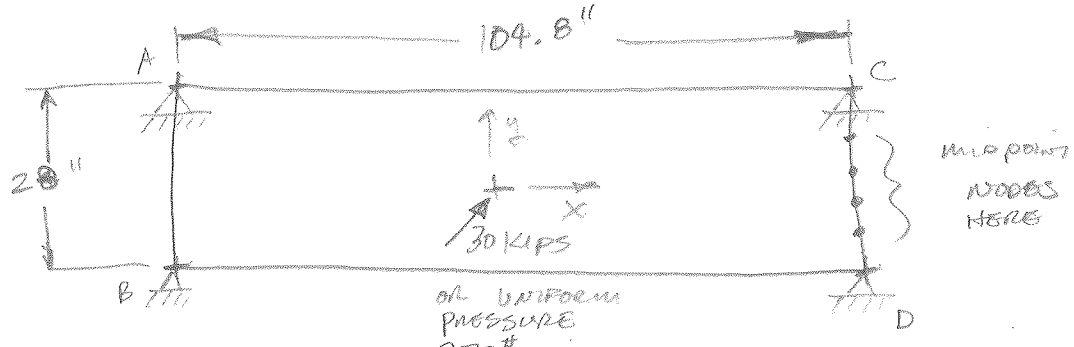

$\frac{9700^{\#}}{(104.8)(28)} = 3.305$ psi

POINT LOAD #1

$F_z = 7500^{\#}$ (EACH CORNER)

CORNER ALL DOF'S = 0
MID POINT NODES ROTY = 0

Reaction
$\Sigma M_x = 88160$ (A + C)
$\Sigma M_y = 391,680$ (C + D + MID NODES)

POINT LOAD #2

$F_z = 7500^{\#}$ (EACH CORNER)

CORNER ONLY ALL DOF'S = 0

Reaction
$\Sigma M_x = 16,111$ in-lb (A + C)
$\Sigma M_y = 313,750$ (C + D)

DISTRIBUTED LOAD #1

$F_z = 2431^{\#}$ (SUMS TO $9724^{\#}$)

CORNER ALL DOF'S = 0
MIDPOINT NODES ROTY = 0

Reaction
$\Sigma M_x = 23616$ (A + C)
$\Sigma M_y = 84,939$ (C + D + MID NODES)

DISTRIBUTED LOAD #2

$F_z = 2431^{\#}$ (SUMS TO $9724^{\#}$)

Reaction LOADS
$\Sigma M_x = 7440$ (A + C)
$\Sigma M_y = 68,553$ (C + D)

JEH 4-23-97

WHAT SHOULD ANSYS CALCULATE FOR A MOMENT IN THE CASE OF A UNIFORMLY DISTRIBUTED LOAD?

FOR M_x

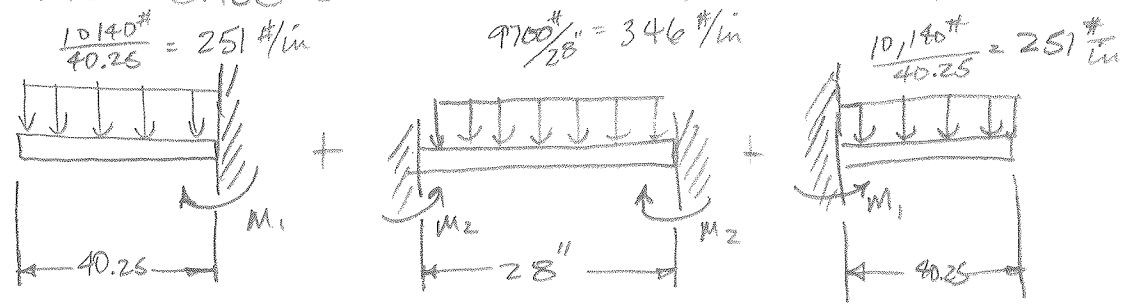

$$M_1 = \frac{-wl^2}{2} = \frac{251(40.25)^2}{2} = 203{,}300 \text{ in-lb}$$ (101,600 lb-in PER REACTION POINT)

$$M_2 = \frac{wl^2}{12} \quad \frac{346(28)^2}{12} = 22{,}605 \text{ in-lb}$$ (11,300 in-lb PER REACTION POINT)

FOR M_y

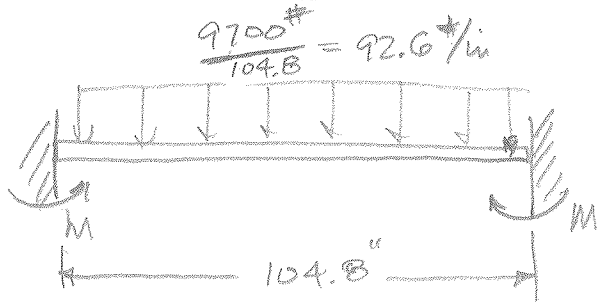

$$M = \frac{wl^2}{12} = \frac{(92.6)(104.8)^2}{12} = 95{,}918 \text{ in-lb}$$

DIVIDED OVER TWO REACTION POINTS

47,960 in-lb

JCH 4-23-97

WHAT SHOULD ANSYS CALCULATE FOR A MOMENT IN THE CASE OF A POINT LOAD AT THE CENTER OF A DISK?

FOR M_y

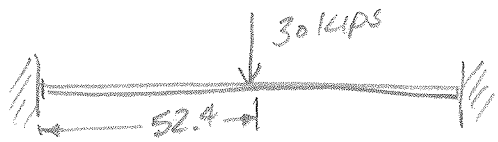

$$M_{MAX} = \frac{-wl}{8} \quad \frac{(30)(52.4)(2)}{8} = 393{,}000 \text{ in-lb}$$

DIVIDED BY TWO REACTION POINTS GIVES 196,500 in-lb

FOR M_x

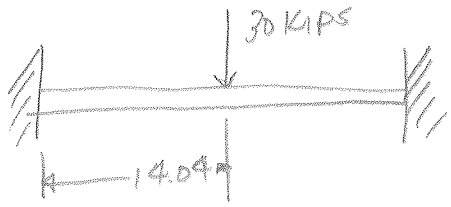

$$M_{MAX} = \frac{-wl}{8} = \frac{(30)(14.04)(2)}{8} = 105{,}300 \text{ in-lb}$$

DIVIDED OVER TWO REACTION points = 52,650 in-lb

ANSYS DISK MODELS

DESCRIPTION	Fx	Fy	Fz	Mx	My	Mz
DISK MODEL; 30 KIP POINT LOAD; Ux, Uy, Uz = 0; ROTS FREE	-0-	-0-	7500# PER NODE	-0-	-0-	-0-
DISK MODEL; 30 KIP POINT LOAD; Ux, Uy, Uz = 0 ROTy = 0; OTHER ROTS FREE	-0-	-0-	7500# PER NODE	-0-	238,900 in-lb	-0-
DISK MODEL; 30 KIP POINT LOAD; Ux, Uy, Uz = 0 ROTx = 0; OTHER ROTS FREE	-0-	-0-	7500# PER NODE	42616 in-lb	-0-	-0-
DISK MODEL; 30 KIP POINT LOAD; Ux, Uy, Uz = 0 ROTx & ROTy & ROTz = 0	-0-	-0-	7500# PER NODE	320 in-lb	238,940 in-lb	-0-
DISK MODEL; UNIFORM SURFACE PRESSURE 3.2 psi WITHOUT CENTER CONE JUST HOLE IN CENTER Ux, Uy, Uz, ROTx, ROTy, ROTz = 0	-0-	-0-	7499.9# PER NODE	13980 in-lb	96,132 in-lb	-0-
DISK MODEL; UNIFORM SURFACE PRESSURE OF 3.2 psi WITH CENTER CONE Ux, Uy, Uz, ROTx, ROTy, ROTz = 0	568#	17#	7500# PER NODE	13381 in-lb	94,424 in-lb	-0-

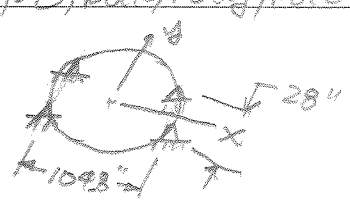

JEH 4-23-97

COORDINATE TRANSFORMATION FOR PICK POINT NODE

GLOBAL COORDS - APPLIED LOADS -	ELEMENT COORDS - REACTION LOADS -
$F_x = -8096$	$F_x' = 7082$
$F_y = 2853$	$F_y' = -7500.3$
$F_z = -7500$	$F_z' = -4851.3$
$M_x = -12734$	$M_x' = 32286$ in-lb
$M_y = -77218$	$M_y' = 0$
$M_z = 0$	$M_z' = 71292$ in-lb

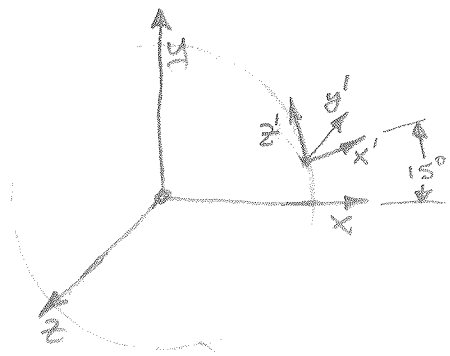

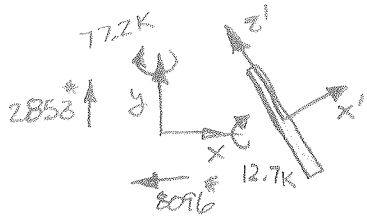

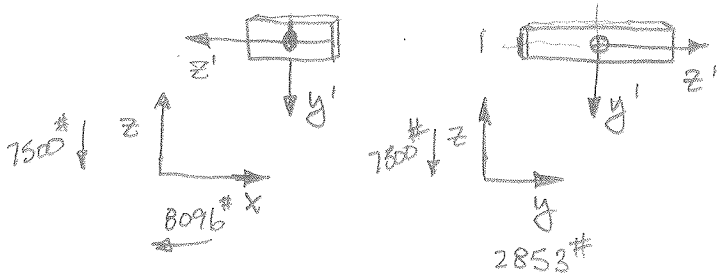

JH 4-23-97

HAND CALCULATION OF WHAT ANSYS SHOULD CALCULATE AT BOLT LOCATIONS

TENSION INDUCED IN CONNECTION BY BENDING STRESS & MOMENT OF INERTIA OF THE CROSS SECTION AT THE BOLT LOCATION.

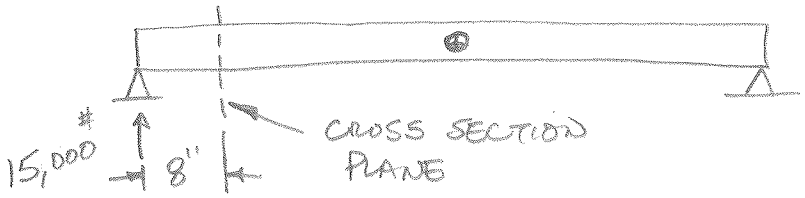

WE KNOW THE CROSS SECTION AT THE BOLT LOCATION AND THE BENDING MOMENT. WE ALSO KNOW THAT COMPRESSION APPEARS AT THE TOP OF THE CROSS-SECTION AND TENSION AT THE BOTTOM. IF THE BENDING MOMENT WERE RESOLVED INTO SIMPLE LOADS WHAT WOULD THEY BE?

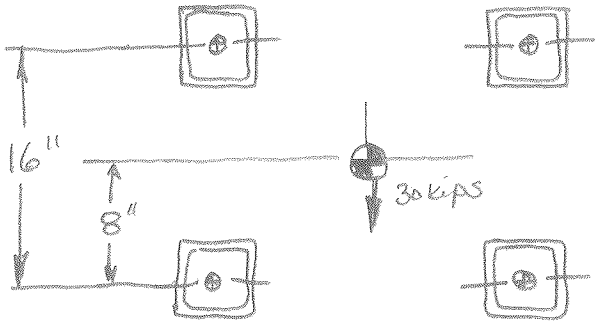

$I_{TOTAL} = I + AD^2$

$I = 271 \text{ in}^4$

$A = 18.4 \text{ in}^2$

$D = 8''$

$I_T = 4(271) + 4(18.4)(4)^2 = 2261 \text{ in}^4$

$\sigma = \frac{Mc}{I} = \frac{2(60{,}000)(8)}{2261} = 424 \text{ psi}$

WHAT WOULD A UNIFORM 424 psi OVER 18.4 in² RESOLVE TO IF IT WERE A POINT LOAD $\boxed{7815 \text{ lb}}$

ANSYS PREDICTS 8096#

JEH 4-17-97

WHAT IF THE MOMENT IS RESOLVED TO A FORCE-ARM SYSTEM?

120,000 in-lb

=

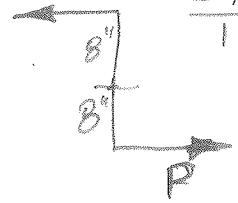

$P = \frac{(120{,}000)}{16} = 7500^{\#}$

WHAT LATERAL LOAD IS DEVELOPED IN A FASTENER WHICH IS 15° TIPPED AND HAS A FORCE $F_x = 7815^{\#}$

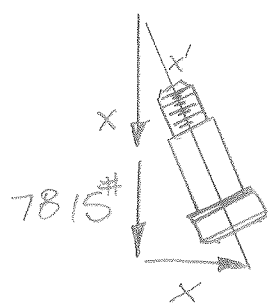

$\tan 15 = \frac{x}{7815}$

$x = 2094^{\#}$

JEH 4-23-97

— DISCUSSION —

ARE THE LOADS THAT ANSYS CALCULATES REASONABLE?

$F_z = -7500$ WHICH IS RIGHT ON THE MONEY!

$F_x = -8096^{\#}$ WHICH IS COMPARED AGAINST AN HAND CALCULATION OF $7815^{\#}$ WHICH IS CLOSE

$F_y = 2853^{\#}$ WHICH IS COMPARED AGAINST A WEDGE CALCULATION OF $2094^{\#}$.

$M_x = -12734$ in-lb

$M_y = -77218$ in-lb

$M_z = 0$

WHICH ARE COMPARED AGAINST A LIFTING FIXTURE SIDE MOMENT CALCULATION WHICH SHOWS $M_y = -60{,}000$ in-lb AND COMPARED FOR MAGNITUDE AGAINST THE BEHAVIOR SEEN IN THE SIMPLE PLATE STUDIES.

JEH 4-23-97

2.

LOAD CASE 1b

LIFTING THE EM
FROM A CENTER
SPAN POSITION
(WITHOUT BOLTS)

STRUCTURAL LOADING FOR CASE 1b

THE ELEMENT TABLE FOR CASE 1b IS INCLUDED IN THE RESULTS. THE LOADING IN THIS CASE PLACES THE ENTIRE LOAD OF THE EM ON THE CROSS BEAMS AND IS INTENDED TO SHOW WHAT WOULD HAPPEN TO THE STRUCTURE IF THE BOLTS ARE NOT USED. THE MAXIMUM OR MINIMUM STRESS SHOWN IN THE RESULTS IS ≤ 6000 psi SO THERE IS NO PROBLEM HERE. A SPREADSHEET LISTING OF THE ELEMENT FORCES AND MOMENTS FOLLOWS THIS PAGE.

Load Case 1B Lifting Fixture Analysis					Results Are in Element Coordinate System			
Eric Haggard TS Eng 4-9-97								
ELEM	FX´(lb)	FY´(lb)	FZ´(lb)	MX´(in/lb)	MY´(in/lb)	MZ´(in/lb)	MAX Stress	MIN Stress
2262	5.34E-10	1.49E-08	-1.54E-09	-1.21E-09	2.33E-09	4.50E-09	1.47E-10	-9.10E-11
2264	1.05E-10	1.21E-08	2.86E-09	-3.85E-10	-9.31E-10	3.96E-09	41E-10-0.79824E-10	
2266	3.73E-10	7.45E-09	1.31E-09	1.23E-09	-2.33E-10	8.11E-10	3.79E-11	1.44E-12
2268	6.47E-10	8.38E-09	1.51E-09	2.22E-09	2.33E-10	1.10E-08	2.30E-10	-1.62E-10
2269	-8.61E-09	-3.96E-09	1.49E-08	-1.86E-09	1.49E-08	5.24E-10	-1.84E-10	-7.23E-10
2270	-8.15E-09	9.08E-09	-2.98E-08	-2.10E-09	-1.02E-08	4.31E-09	-1.75E-10	-6.83E-10
2271	-7.92E-09	1.16E-09	-7.82E-08	-2.10E-09	-1.40E-08	-2.68E-09	-1.26E-10	-7.07E-10
2272	-8.85E-09	2.33E-09	-7.45E-08	-2.21E-09	-7.45E-08	-3.84E-09	9.01E-10	-1.83E-09
2273	-9.31E-09	1.16E-09	-1.08E-07	-2.21E-09	-1.42E-07	-3.96E-09	2.06E-09	-3.05E-09
2274	-9.78E-09	4.19E-09	-4.10E-08	-1.63E-09	-2.70E-07	-6.05E-09	4.30E-09	-5.33E-09
2275	-7499.9	3182.6	17666	57923	-30000	39279	813.9	-1603.4
2276	-7499.9	3182.6	17666	57923	-12334	36097	450.19	-1239.6
2277	-7499.9	3182.6	17666	57923	5331.5	32914	272.5	-1062
2278	-7499.9	3182.6	17666	57923	22997	29732	525.17	-1314.6
2279	-7499.9	3182.6	17666	57923	40663	26549	777.84	-1567.3
2280	-7499.9	3182.6	17666	57923	58328	23366	1030.5	-1820
2281	-7499.9	3182.6	17666	57923	75994	20184	1283.2	-2072.6
2282	-7499.9	3182.6	17666	57923	93659	17001	1535.8	-2325.3
2283	-7499.9	3182.6	17666	57923	1.11E+05	13819	1788.5	-2578
2284	-7499.9	3182.6	17666	57923	1.29E+05	10636	2041.2	-2830.6
2285	-1.16E-08	9.31E-10	-2.61E-08	1.16E-10	1.86E-08	-5.88E-09	-1.85E-10	-1.04E-09
2286	-1.16E-08	6.98E-10	6.71E-08	3.49E-10	-2.79E-09	-4.71E-09	-4.82E-10	-7.44E-10
2287	-1.19E-08	-1.16E-09	-1.86E-08	3.49E-10	7.54E-08	-6.00E-09	7.96E-10	-2.05E-09
2288	-1.14E-08	3.26E-09	2.98E-08	2.33E-10	9.87E-08	-4.83E-09	1.21E-09	-2.41E-09
2289	-1.14E-08	3.26E-09	2.24E-08	-6.98E-10	9.13E-08	-6.69E-09	1.11E-09	-2.31E-09
2290	-1.09E-08	1.16E-09	2.24E-08	-3.49E-10	9.22E-08	-8.61E-09	1.18E-09	-2.33E-09
2291	-7499.9	-3182.6	17666	-57923	-30000	-39279	813.9	-1603.4
2292	-7499.9	-3182.6	17666	-57923	-12334	-36097	450.19	-1239.6
2293	-7499.9	-3182.6	17666	-57923	5331.5	-32914	272.5	-1062
2294	-7499.9	-3182.6	17666	-57923	22997	-29732	525.17	-1314.6
2295	-7499.9	-3182.6	17666	-57923	40663	-26549	777.84	-1567.3
2296	-7499.9	-3182.6	17666	-57923	58328	-23366	1030.5	-1820
2297	-7499.9	-3182.6	17666	-57923	75994	-20184	1283.2	-2072.6
2298	-7499.9	-3182.6	17666	-57923	93659	-17001	1535.8	-2325.3
2299	-7499.9	-3182.6	17666	-57923	1.11E+05	-13819	1788.5	-2578
2300	-7499.9	-3182.6	17666	-57923	1.29E+05	-10636	2041.2	-2830.6
2301	4.66E-10	3.73E-09	8.94E-08	9.31E-10	-3.91E-08	1.86E-09	7.39E-10	-6.90E-10
2302	0	8.61E-09	1.86E-08	5.82E-10	1.40E-08	-2.74E-09	2.91E-10	-2.91E-10
2303	4.66E-10	1.12E-08	1.08E-07	4.66E-10	2.33E-08	-9.31E-09	5.93E-10	-5.44E-10
2304	4.66E-10	1.65E-08	0	5.82E-10	1.40E-07	-1.90E-08	2.79E-09	-2.74E-09
2305	4.66E-10	1.61E-08	-3.35E-08	2.33E-10	1.80E-07	-3.50E-08	3.77E-09	-3.72E-09
2306	1.63E-09	1.33E-08	4.84E-08	1.16E-10	1.48E-07	-5.02E-08	3.55E-09	-3.37E-09
2307	-7500.1	-3182.6	17666	-57923	-30000	-39280	813.92	-1603.4
2308	-7500.1	-3182.6	17666	-57923	-12335	-36097	450.2	-1239.7
2309	-7500.1	-3182.6	17666	-57923	5330.7	-32915	272.49	-1062
2310	-7500.1	-3182.6	17666	-57923	22996	-29732	525.15	-1314.6
2311	-7500.1	-3182.6	17666	-57923	40662	-26550	777.82	-1567.3
2312	-7500.1	-3182.6	17666	-57923	58327	-23367	1030.5	-1820
2313	-7500.1	-3182.6	17666	-57923	75993	-20184	1283.2	-2072.6
2314	-7500.1	-3182.6	17666	-57923	93659	-17002	1535.8	-2325.3
2315	-7500.1	-3182.6	17666	-57923	1.11E+05	-13819	1788.5	-2578
2316	-7500.1	-3182.6	17666	-57923	1.29E+05	-10637	2041.2	-2830.7
2317	-3.49E-09	-3.49E-09	7.45E-09	6.98E-10	-2.24E-08	-2.39E-09	2.48E-10	-6.15E-10
2318	-3.96E-09	-1.40E-09	-5.96E-08	3.49E-10	5.03E-08	-5.41E-09	7.64E-10	-1.18E-09
2319	-3.73E-09	4.66E-09	4.10E-08	3.49E-10	-2.33E-08	-5.88E-09	3.13E-10	-7.05E-10
2320	-3.49E-09	5.82E-09	4.10E-08	-1.16E-10	2.70E-08	-9.20E-09	4.48E-10	-8.15E-10
2321	-3.73E-09	8.85E-09	-2.61E-08	0	3.35E-08	-1.50E-08	6.51E-10	-1.04E-09
2322	-3.73E-09	1.02E-08	-7.45E-08	0	2.98E-08	-2.27E-08	7.20E-10	-1.11E-09
2323	-7500.1	3182.6	17666	57923	-30000	39280	813.92	-1603.4
2324	-7500.1	3182.6	17666	57923	-12335	36097	450.2	-1239.7
2325	-7500.1	3182.6	17666	57923	5330.7	32915	272.49	-1062
2326	-7500.1	3182.6	17666	57923	22996	29732	525.15	-1314.6
2327	-7500.1	3182.6	17666	57923	40662	26550	777.82	-1567.3

ELEM	FX´(lb)	FY´(lb)	FZ´(lb)	MX´(in/lb)	MY´(in/lb)	MZ´(in/lb)	MAX Stress	MIN Stress
2328	-7500.1	3182.6	17666	57923	58327	23367	1030.5	-1820
2329	-7500.1	3182.6	17666	57923	75993	20184	1283.2	-2072.6
2330	-7500.1	3182.6	17666	57923	93659	17002	1535.8	-2325.3
2331	-7500.1	3182.6	17666	57923	1.11E+05	13819	1788.5	-2578
2332	-7500.1	3182.6	17666	57923	1.29E+05	10637	2041.2	-2830.7
2333	-17666	7500.1	-3182.6	7454	57923	1.47E+05	2639.3	-4498.8
2334	-17666	7500.1	-3182.6	7454	48970	1.26E+05	2115	-3974.5
2335	-17666	7500.1	-3182.6	7454	40016	1.04E+05	1590.7	-3450.2
2336	-17666	7500.1	-3182.6	7454	31063	83355	1066.4	-2925.9
2337	-17666	7500.1	-3182.6	7454	22109	62255	542.04	-2401.6
2338	-17666	7500.1	-3182.6	7454	13155	41155	17.731	-1877.3
2339	-17666	7500.1	-3182.6	7454	4201.9	20055	-506.58	-1353
2340	-17666	7500.1	-3182.6	7454	-4751.7	-1045	-828.64	-1030.9
2341	-17666	7500.1	246.04	19842	-7101.9	-22145	-419.53	-1440
2342	-17666	7500.1	246.04	19842	-6409.7	-43245	-63.494	-1796
2343	-17666	7500.1	246.04	19842	-5717.5	-64345	292.54	-2152.1
2344	-17666	7500.1	246.04	19842	-5025.4	-85445	648.57	-2508.1
2345	-17666	7500.1	246.04	19842	-4333.2	-1.07E+05	1004.6	-2864.1
2346	-17666	7500.1	246.04	19842	-3641	-1.28E+05	1360.6	-3220.2
2347	-17666	7500.1	246.04	19842	-2948.8	-1.49E+05	1716.7	-3576.2
2348	-17666	7500.1	246.04	19842	-2256.7	-1.70E+05	2072.7	-3932.2
2349	-17666	7500.1	246.04	19842	-1564.5	-1.91E+05	2428.7	-4288.3
2350	-17666	7500.1	246.04	19842	-872.31	-2.12E+05	2784.8	-4644.3
2351	-17666	7500.1	246.04	19842	-180.14	-2.33E+05	3140.8	-5000.3
2352	-17666	7500.1	246.04	19842	512.04	-2.54E+05	3514.7	-5374.2
2353	-17666	-7499.9	-246.02	-19841	1203.8	-2.75E+05	3894.7	-5754.2
2354	-17666	-7499.9	-246.02	-19841	511.72	-2.54E+05	3514.5	-5374
2355	-17666	-7499.9	-246.02	-19841	-180.4	-2.33E+05	3140.6	-5000.2
2356	-17666	-7499.9	-246.02	-19841	-872.52	-2.12E+05	2784.6	-4644.1
2357	-17666	-7499.9	-246.02	-19841	-1564.6	-1.91E+05	2428.6	-4288.1
2358	-17666	-7499.9	-246.02	-19841	-2256.8	-1.70E+05	2072.5	-3932.1
2359	-17666	-7499.9	-246.02	-19841	-2948.9	-1.49E+05	1716.5	-3576.1
2360	-17666	-7499.9	-246.02	-19841	-3641	-1.28E+05	1360.5	-3220
2361	-17666	-7499.9	-246.02	-19841	-4333.1	-1.07E+05	1004.5	-2864
2362	-17666	-7499.9	-246.02	-19841	-5025.2	-85438	648.45	-2508
2363	-17666	-7499.9	-246.02	-19841	-5717.4	-64339	292.42	-2152
2364	-17666	-7499.9	-246.02	-19841	-6409.5	-43239	-63.603	-1795.9
2365	-17666	-7499.9	3182.6	-7453.6	-13705	-22140	-304.43	-1555.1
2366	-17666	-7499.9	3182.6	-7453.6	-4751.4	-1040.1	-828.73	-1030.8
2367	-17666	-7499.9	3182.6	-7453.6	4202.2	20059	-506.5	-1353
2368	-17666	-7499.9	3182.6	-7453.6	13156	41159	17.799	-1877.3
2369	-17666	-7499.9	3182.6	-7453.6	22109	62258	542.1	-2401.6
2370	-17666	-7499.9	3182.6	-7453.6	31063	83358	1066.4	-2925.9
2371	-17666	-7499.9	3182.6	-7453.6	40016	1.04E+05	1590.7	-3450.2
2372	-17666	-7499.9	3182.6	-7453.6	48970	1.26E+05	2115	-3974.5
2373	-17666	7500.1	3182.6	-7454	-57923	1.47E+05	2639.3	-4498.8
2374	-17666	7500.1	3182.6	-7454	-48970	1.26E+05	2115	-3974.5
2375	-17666	7500.1	3182.6	-7454	-40016	1.04E+05	1590.7	-3450.2
2376	-17666	7500.1	3182.6	-7454	-31063	83355	1066.4	-2925.9
2377	-17666	7500.1	3182.6	-7454	-22109	62255	542.04	-2401.6
2378	-17666	7500.1	3182.6	-7454	-13155	41155	17.731	-1877.3
2379	-17666	7500.1	3182.6	-7454	-4201.9	20055	-506.58	-1353
2380	-17666	7500.1	3182.6	-7454	4751.7	-1045	-828.64	-1030.9
2381	-17666	7500.1	-246.04	-19842	7101.9	-22145	-419.53	-1440
2382	-17666	7500.1	-246.04	-19842	6409.7	-43245	-63.494	-1796
2383	-17666	7500.1	-246.04	-19842	5717.5	-64345	292.54	-2152.1
2384	-17666	7500.1	-246.04	-19842	5025.4	-85445	648.57	-2508.1
2385	-17666	7500.1	-246.04	-19842	4333.2	-1.07E+05	1004.6	-2864.1
2386	-17666	7500.1	-246.04	-19842	3641	-1.28E+05	1360.6	-3220.2
2387	-17666	7500.1	-246.04	-19842	2948.8	-1.49E+05	1716.7	-3576.2
2388	-17666	7500.1	-246.04	-19842	2256.7	-1.70E+05	2072.7	-3932.2
2389	-17666	7500.1	-246.04	-19842	1564.5	-1.91E+05	2428.7	-4288.3
2390	-17666	7500.1	-246.04	-19842	872.31	-2.12E+05	2784.8	-4644.3
2391	-17666	7500.1	-246.04	-19842	180.14	-2.33E+05	3140.8	-5000.3
2392	-17666	7500.1	-246.04	-19842	-512.04	-2.54E+05	3514.7	-5374.2
2393	-17666	-7499.9	246.02	19841	-1203.8	-2.75E+05	3894.7	-5754.2

ELEM	FX'(lb)	FY'(lb)	FZ'(lb)	MX' (in/lb)	MY' (in/lb)	MZ' (in/lb)	MAX Stress	MIN Stress
2394	-17666	-7499.9	246.02	19841	-511.72	-2.54E+05	3514.5	-5374
2395	-17666	-7499.9	246.02	19841	180.4	-2.33E+05	3140.6	-5000.2
2396	-17666	-7499.9	246.02	19841	872.52	-2.12E+05	2784.6	-4644.1
2397	-17666	-7499.9	246.02	19841	1564.6	-1.91E+05	2428.6	-4288.1
2398	-17666	-7499.9	246.02	19841	2256.8	-1.70E+05	2072.5	-3932.1
2399	-17666	-7499.9	246.02	19841	2948.9	-1.49E+05	1716.5	-3576.1
2400	-17666	-7499.9	246.02	19841	3641	-1.28E+05	1360.5	-3220
2401	-17666	-7499.9	246.02	19841	4333.1	-1.07E+05	1004.5	-2864
2402	-17666	-7499.9	246.02	19841	5025.2	-85438	648.45	-2508
2403	-17666	-7499.9	246.02	19841	5717.4	-64339	292.42	-2152
2404	-17666	-7499.9	246.02	19841	6409.5	-43239	-63.603	-1795.9
2405	-17666	-7499.9	-3182.6	7453.6	13705	-22140	-304.43	-1555.1
2406	-17666	-7499.9	-3182.6	7453.6	4751.4	-1040.1	-828.73	-1030.8
2407	-17666	-7499.9	-3182.6	7453.6	-4202.2	20059	-506.5	-1353
2408	-17666	-7499.9	-3182.6	7453.6	-13156	41159	17.799	-1877.3
2409	-17666	-7499.9	-3182.6	7453.6	-22109	62258	542.1	-2401.6
2410	-17666	-7499.9	-3182.6	7453.6	-31063	83358	1066.4	-2925.9
2411	-17666	-7499.9	-3182.6	7453.6	-40016	1.04E+05	1590.7	-3450.2
2412	-17666	-7499.9	-3182.6	7453.6	-48970	1.26E+05	2115	-3974.5
2413	3428.6	-1.16E-08	8.39E-09	7.97E-09	6603.4	12388	511.77	-150.87
2414	3428.6	5.82E-09	6.44E-09	-8.57E-08	-6603.3	12388	511.76	-150.86
2415	-492.05	-15000	1.05E-08	1.33E-07	3.01E-02	-39683	666.41	-718.21
2416	-492.05	-15000	1.05E-08	1.33E-07	3.01E-02	50774	859.91	-911.7
2417	-492.05	9.98E-09	1.05E-08	1.33E-07	3.01E-02	1.41E+05	2438	-2489.8
2418	-492.05	15000	1.05E-08	1.33E-07	3.01E-02	1.41E+05	2438	-2489.8
2419	-492.05	15000	1.05E-08	1.32E-07	3.01E-02	50774	859.91	-911.7
2420	-3182.6	-7499.9	-17666	30000	57923	-39279	1528.3	-1863.3
2421	-3182.6	-7499.9	-17666	30000	13535	-20434	425.12	-760.13
2422	-3182.6	-7499.9	-17666	30000	-30853	-1589.2	398.49	-733.49
2423	-3182.6	-7499.9	-17666	30000	-75242	17256	1446.2	-1781.2
2424	-3182.6	-7499.9	-17666	30000	-1.20E+05	36101	2549.4	-2884.4
2425	-3182.6	-7499.9	-17666	30000	-1.64E+05	54946	3652.5	-3987.5
2426	-3182.6	7499.9	17666	-30000	-2.08E+05	73791	4755.7	-5090.7
2427	-3182.6	7499.9	17666	-30000	-1.64E+05	54946	3652.5	-3987.5
2428	-3182.6	7499.9	17666	-30000	-1.20E+05	36101	2549.4	-2884.4
2429	-3182.6	7499.9	17666	-30000	-75242	17256	1446.2	-1781.2
2430	-3182.6	7499.9	17666	-30000	-30853	-1589.2	398.49	-733.49
2431	-3182.6	7499.9	17666	-30000	13535	-20434	425.12	-760.13
2432	-3182.6	7500.1	-17666	-30000	57923	39280	1528.3	-1863.3
2433	-3182.6	7500.1	-17666	-30000	13535	20434	425.12	-760.13
2434	-3182.6	7500.1	-17666	-30000	-30853	1588.9	398.48	-733.49
2435	-3182.6	7500.1	-17666	-30000	-75241	-17257	1446.2	-1781.2
2436	-3182.6	7500.1	-17666	-30000	-1.20E+05	-36102	2549.4	-2884.4
2437	-3182.6	7500.1	-17666	-30000	-1.64E+05	-54948	3652.6	-3987.6
2438	-3182.6	-7500.1	17666	30000	-2.08E+05	-73793	4755.7	-5090.7
2439	-3182.6	-7500.1	17666	30000	-1.64E+05	-54948	3652.6	-3987.6
2440	-3182.6	-7500.1	17666	30000	-1.20E+05	-36102	2549.4	-2884.4
2441	-3182.6	-7500.1	17666	30000	-75241	-17257	1446.2	-1781.2
2442	-3182.6	-7500.1	17666	30000	-30853	1588.9	398.48	-733.49
2443	-3182.6	-7500.1	17666	30000	13535	20434	425.12	-760.13
MINIMUM	VALUES							
ELEM	2336	2415	2423	2309	2426	2353	2406	2353
VALUE	-17666	-15000	-17666	-57923	-2.08E+05	-2.75E+05	-828.73	-5754.2
MAXIMUM	VALUES							
ELEM	2413	2418	2430	2324	2300	2333	2438	2266
VALUE	3428.6	15000	17666	57923	1.29E+05	1.47E+05	4755.7	1.44E-12

EM LIFTING FIXTURE ASSEMBLY

THERE ARE THREE MAJOR LOADING CONFIGURATIONS TO BE ANALYZED. THE EM WILL BE PICKED UP WHILE ITS IN THE HORIZONTAL POSITION AND ROTATED TO VERTICAL WHERE THE 6X6 FRAME AND CENTER CONE SUPPORT WILL BE REMOVED FROM THE STRUCTURE AND LOWERED TO THE GROUND. AFTER THE EM IS VERTICAL IT WILL BE MOVED TO THE PLUG STRUCTURE AND MOUNTED. AFTER THAT THE LIFTING FIXTURE WILL BE UNBOLTED AND REMOVED. THE PROCEDURE WILL BE DUPLICATED FOR THE OTHER EM ASSEMBLY, THAT IS, THERE ARE TWO EM ASSEMBLIES.

LOAD CASES

1. EM & LIFTING FIXTURE IN HORIZONTAL POSITION WITH BACKING STRUCTURE.
2. EM & LIFTING FIXTURE IN VERTICAL POSITION WITH BACKING STRUCTURE.
3. EM & LIFTING FIXTURE IN VERTICAL POSITION WITHOUT BACKING STRUCTURE.

Section 2. Analysis of the Lifting Fixture in the Horizontal Position
Load Case 1

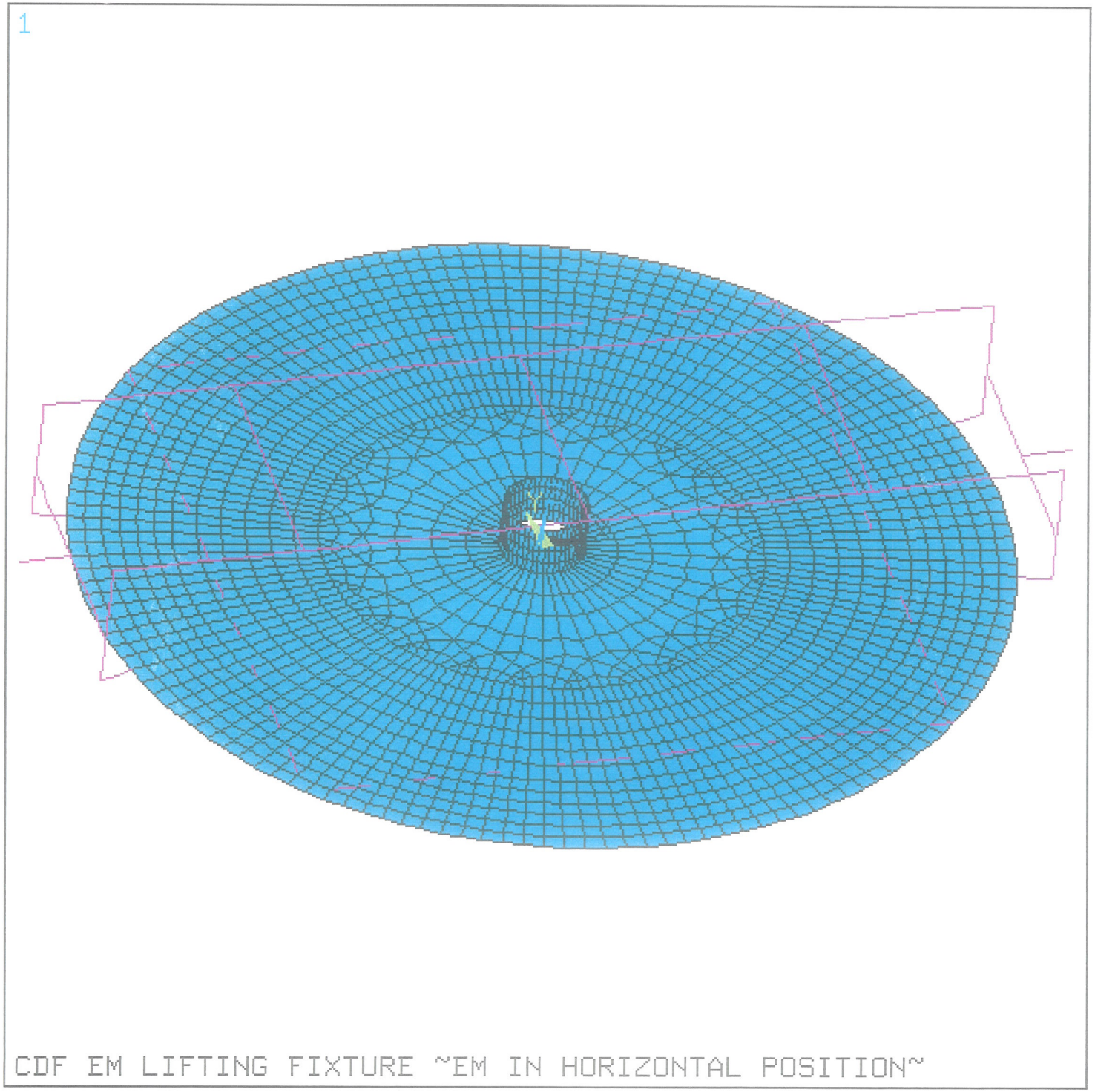
1
ANSYS 5.1
JAN 16 1997
16:29:38
ELEMENTS
TYPE NUM
XV =-0.2571
YV =-0.7342
ZV =0.6283
*DIST=61.552
*XF =-0.233795
*YF =-2.464
*ZF =1.912
A-ZS=22.92
CENTROID HIDDEN
CDF EM LIFTING FIXTURE ~EM IN HORIZONTAL POSITION~

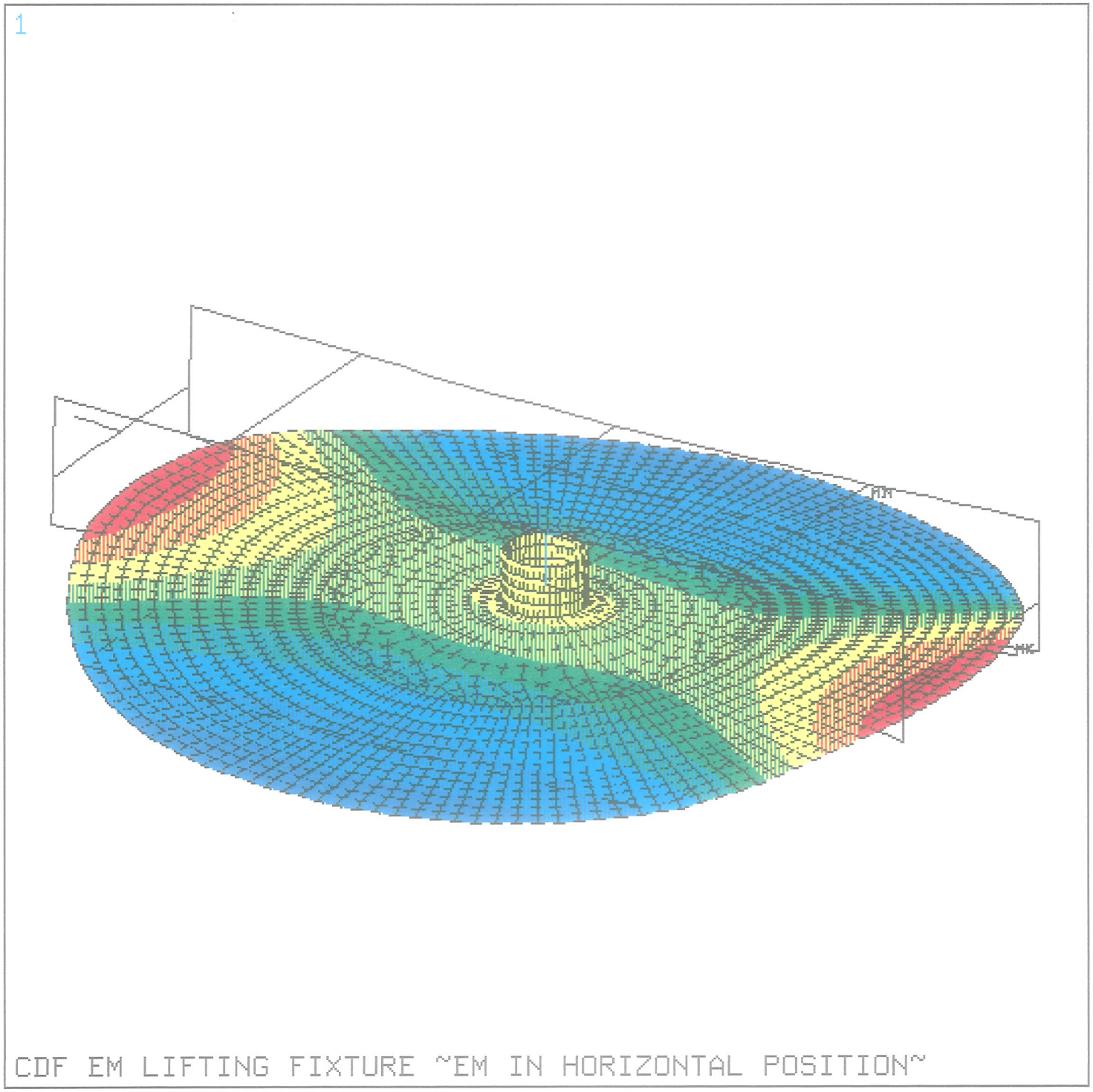
1
ANSYS 5.1
FEB 1 1997
21:17:57
NODAL SOLUTION
STEP=1
SUB =1
TIME=1
UZ
TOP
RSYS=0
DMX =0.041569
SEPC=37.559
SMN =-0.041569
SMX =0.948E-03
-0.041569
-0.036845
-0.03212
-0.027396
-0.022672
-0.017948
-0.013224
-0.0085
-0.003776
0.948E-03
MN
MX
CDF EM LIFTING FIXTURE ~EM IN HORIZONTAL POSITION~

REV.	DESCRIPTION	DRAWN / APPD	DATE / DATE
A	AS-BUILT REVISIONS	S.L.M	1-7-98

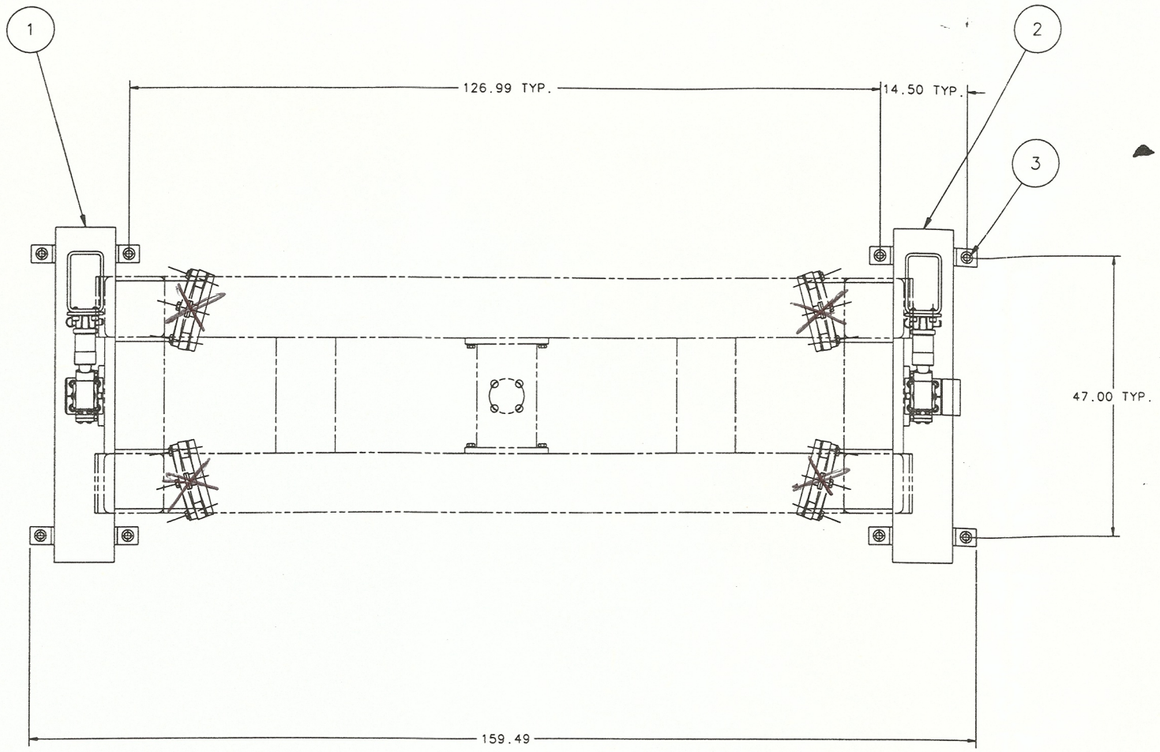

FOR STEP 9. OF THE LOAD TEST PROCEDURE REMOVE BOLTS MARKED WITH AN "X".

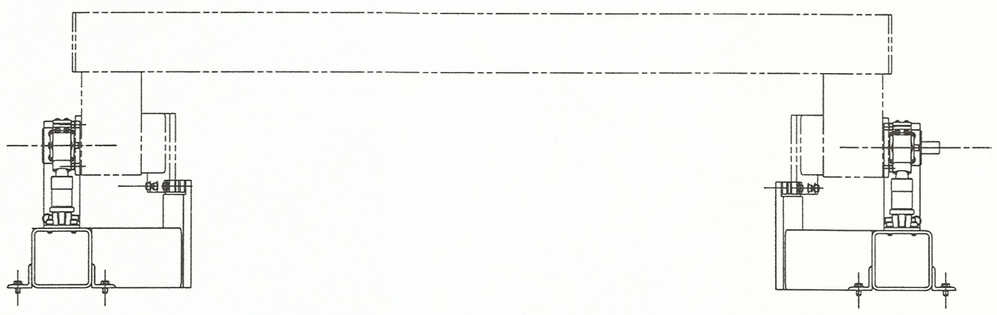

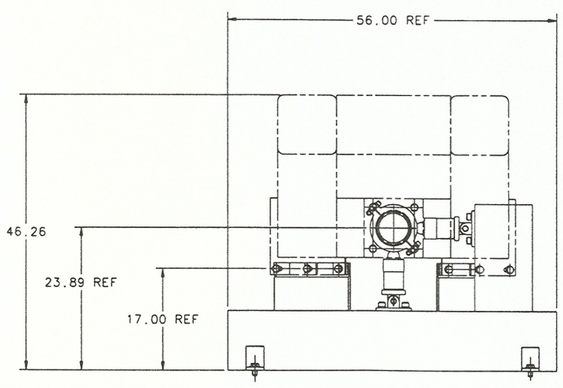

ITEM	PART NO.	DESCRIPTION OR SIZE	QTY.
3	FERMILAB STK. NO. 1204-1200	ANCHOR FLUSH DROP-IN TYPE RED HD. MULT-SET II .750-10UNC-2A BOLT SIZE	8
2	ME-332618	TEST STAND (L.H.)	1
1	ME-332592	TEST STAND (R.H.)	1

PARTS LIST

UNLESS OTHERWISE SPECIFIED				
.XX	.XXX	ANGLES	ORIGINATOR	E. HAGGARD 8-14-97
±.03	± X	± X	DRAWN	S.L. MEREDITH 8-14-97
			CHECKED	E. HAGGARD 8-97
			APPROVED	E. HAGGARD 8-97
			USED ON	
			MATERIAL	

1. BREAK ALL SHARP EDGES .02 MAX.
2. DO NOT SCALE DRAWING.
3. DIMENSIONS BASED UPON ANSI Y14.5M-1982
4. MAX. ALL MACH. SURFACES 250

FERMI NATIONAL ACCELERATOR LABORATORY
UNITED STATES DEPARTMENT OF ENERGY

COLLIDER DETECTOR FACILITY
END-PLUG EM LIFTING FIXTURE TEST STAND
MAIN ASSEMBLY

SCALE	DRAWING NUMBER	SHEET	REV.
1:4	2563.52-ME-332617	1 OF 1	A

CREATED WITH I-DEAS MASTER SERIES 2.1 | USER NAME: SIMMIELEE

Plotted Tue Jan 13 16:30:13 CST 1998 by simmie

RAW ANSYS RESULTS FROM LOAD CASE 1

Case 1: Main Beam Loads and Moments

```
***** SUMMATION OF TOTAL FORCES AND MOMENTS IN GLOBAL COORDINATES *****
 FX  =  -1414.796
 FY  =  0.9256924E-04
 FZ  =  -14908.94
 MX  = -0.5554512E-03
 MY  =   919819.3
 MZ  =  0.5763840E-02
 SUMMATION POINT=      0.          0.          0.
```

Case 1: Main Beam Weld Loads and Moments

```
***** SUMMATION OF TOTAL FORCES AND MOMENTS IN GLOBAL COORDINATES *****
 FX  =  -685.3317
 FY  =   1237.051
 FZ  =  -7476.684
 MX  =  -100639.1
 MY  =   460588.0
 MZ  =   69543.01
 SUMMATION POINT=      0.          0.          0.
```

Case 1: Cantilever Elbow Loads and Moments

```
***** SUMMATION OF TOTAL FORCES AND MOMENTS IN GLOBAL COORDINATES *****
 FX  =   107.6660
 FY  =   38.50502
 FZ  =   3523.933
 MX  =   53108.30
 MY  =  -198220.9
 MZ  =   543.2962
 SUMMATION POINT=      0.          0.          0.
```

Case 1: Cross Beam Elbow Forces and Moments

```
***** SUMMATION OF TOTAL FORCES AND MOMENTS IN GLOBAL COORDINATES *****
 FX  =  -22.55092
 FY  =   19.19755
 FZ  =   3854.297
 MX  =  -58405.75
 MY  =  -217212.2
 MZ  =   740.1709
 SUMMATION POINT=      0.          0.          0.
```

Case 1: Stem Connection Bolt Loads

```
***** SUMMATION OF TOTAL FORCES AND MOMENTS IN GLOBAL COORDINATES *****
 FX  =   107.6660
 FY  =   38.50502
 FZ  =   3523.933
 MX  =   57697.65
 MY  =  -164558.8
 MZ  =   505.9881
 SUMMATION POINT=      0.          0.          0.
```

5.1

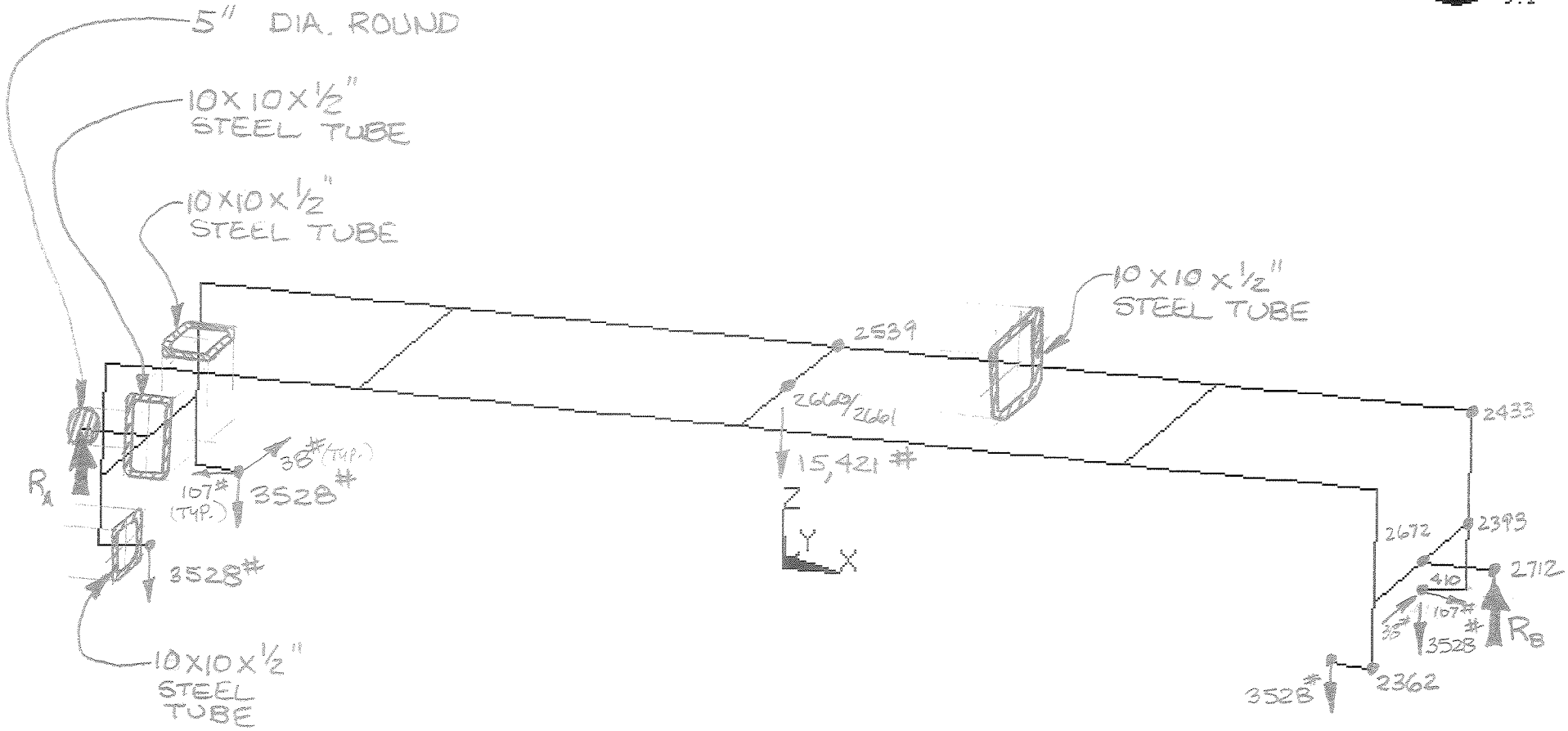

$R_A = R_B = 29{,}530^{\#}$

CDF EM LIFTING FIXTURE WITH EM IN HORIZONTAL POSITION

LIFTING FIXTURE STEM CONNECTION

LOAD CASE 1

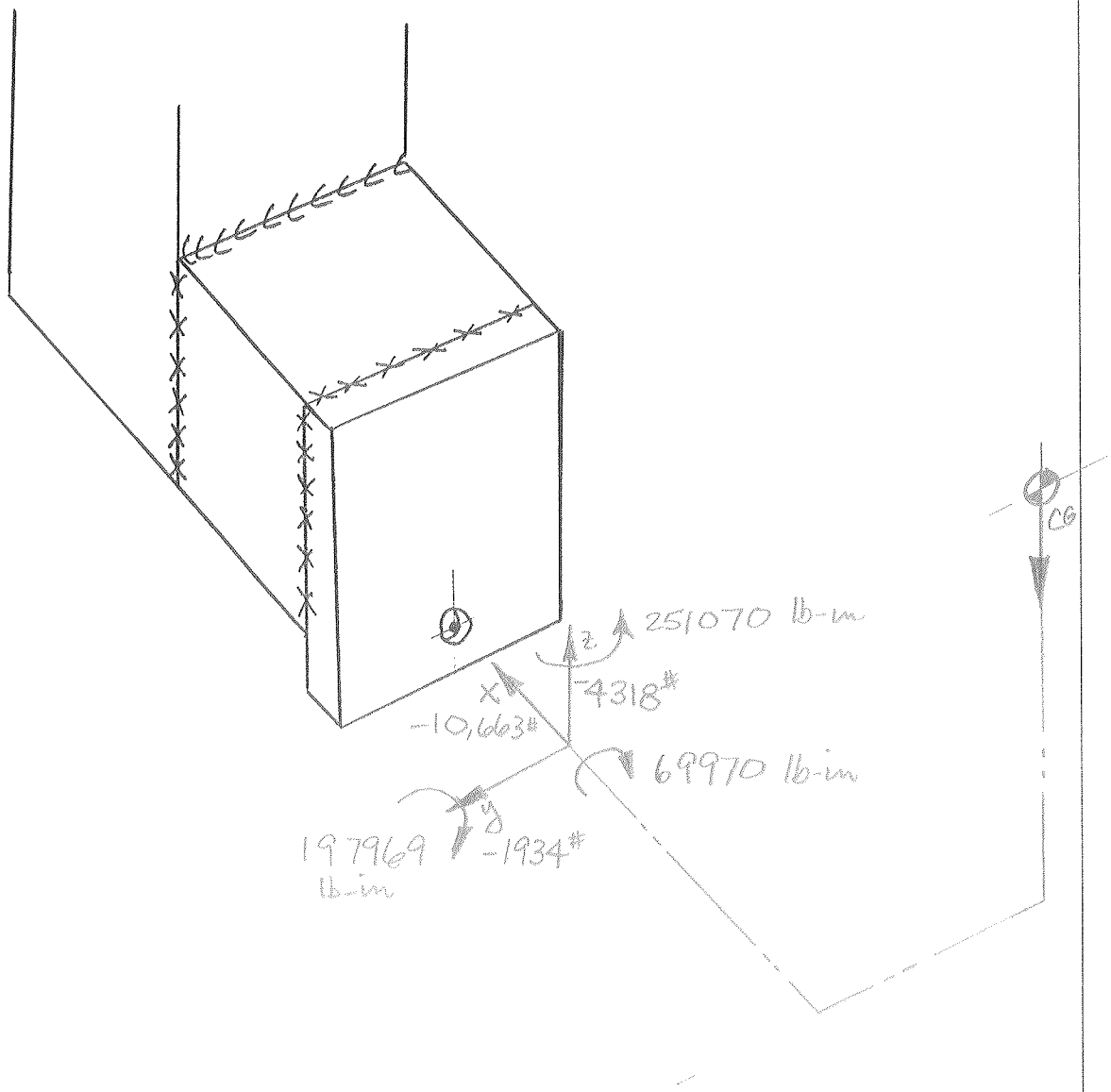

NORMAL STRESS COMPONENTS

BENDING @ z
FORCE along x
BENDING @ y

SHEAR STRESS COMPONENTS

TORSION @ x
FORCE along y
FORCE along z
TORSION FROM FORCE along y

1

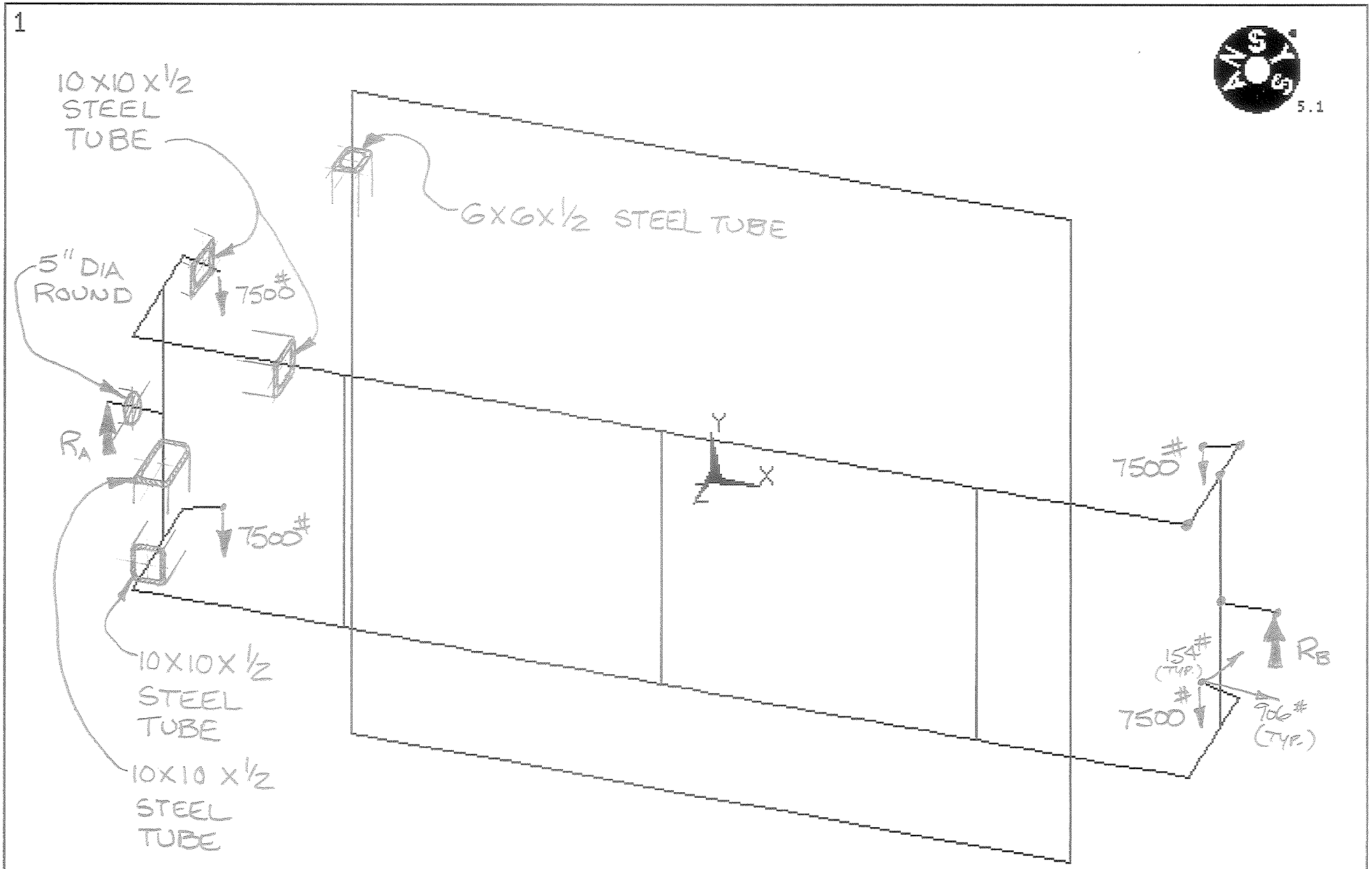

CDF EM LIFTING FIXTURE ~EM IN VERTICAL POSITION~

Section 3. Analysis of the Lifting Fixture in the Vertical Position
Load Case 2 & 3

Stress Calculator	Eric Haggard Ts/Eng 1-27-97			
Load Case 1: Elbow Connection				
Spread Sheet to Calculate Stresses in Square Tube Beam (Stress imposed on the X-Y plane				
X Force	107			
Y Force	38			
Z Force	3528			
Moment @ X	53108			
Moment @ Y	-198220			
Moment @ Z	453			
Area	18			
Iyy	271			
Izz	271			
Ij	542			
Mod. Of Elasticity	29000000			
Dist. Extreme Fiber	5			
Torsional Ext. Fiber	7			
RESULTS				
Normal Stress (Fz)	192			
Shear Stress (Fx, Fy)	6			
Bending Stress (Mx)	980			
Bending Stress (My)	-3657			
Torsional Shear Stress (Mz)	6			
Sigma X	4829			
Sigma Y	192			
Txy	12			
	term 1	term 2	Sigma 1	Sigma 2
Principle Stress (2D)	2510	2319	4829	192
Equivalent Stress	4736			

JEH 1-22-97

CROSS-BEAM STRESSES IN LIFTING FIXTURE DURING CASE 1 HORIZONTAL LIFT

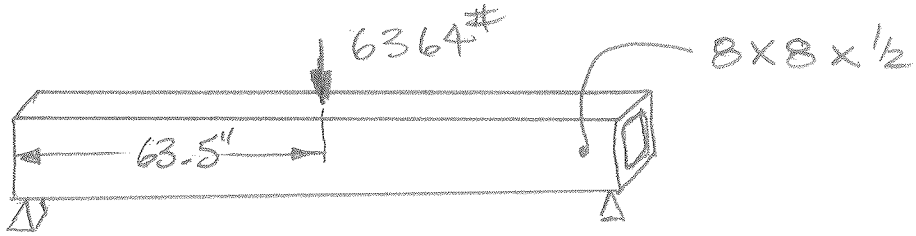

STRESS HERE NEAR THE END WELDED CONNECTION IS DUE TO SHEAR STRESS AND BENDING STRESS

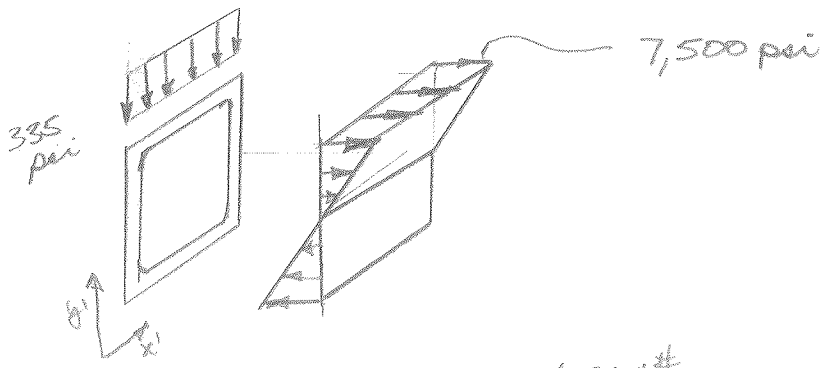

SHEAR STRESS $\tau_{x'y'} = \frac{6364\#}{19\ in^2} = 335\ psi$

BENDING STRESS $\sigma_{x'} = \frac{Mc}{I} = \frac{(63.5)(6364)(5)}{286.6\ in^4}$

$\sigma_{x'} = 7050\ psi$

$$\sigma_{1,2} = \frac{\sigma_{x'} + \sigma_{y'}}{2} \pm \sqrt{\left(\frac{\sigma_{x'} - \sigma_{y'}}{2}\right)^2 + \left(\tau_{x'y'}\right)^2}$$

$$\sigma_{1,2} = \frac{7500}{2} \pm \sqrt{\left(\frac{7500}{2}\right)^2 + (335)^2} = 3750 \pm 3765$$

$\sigma_1 = 7515$

$\sigma_2 = -15$

$$\sigma_E = \left(\tfrac{1}{2}\left((\sigma_1 - \sigma_2)^2 + (\sigma_2 - \sigma_3)^2 + (\sigma_3 - \sigma_1)^2\right)\right)^{1/2} \qquad \sigma_3 = 0$$

$$\sigma_E = \left(\tfrac{1}{2}\left((7515)^2 + (-15)^2 + (7515)^2\right)\right)^{1/2} = 7515\ psi$$

$$SF = \frac{\text{YIELD STRESS}}{\text{EQUIV. STRESS}} = \frac{46000\ psi}{7515} = 6.1$$

Stress Calculator	Eric Haggard Ts/Eng 1-27-97			
Load Case 1: X-Beam Upright Stress Connection				
Spread Sheet to Calculate Stresses in Square Tube Beam (Stress imposed on the X-Y plane				
X Force	22			
Y Force	19			
Z Force	3854			
Moment @ X	-58406			
Moment @ Y	-217212			
Moment @ Z	740			
Area	18			
Iyy	271			
Izz	271			
Ij	542			
Mod. Of Elasticity	29000000			
Dist. Extreme Fiber	5			
Torsional Ext. Fiber	7			
RESULTS				
Normal Stress (Fz)	209			
Shear Stress (Fx, Fy)	2			
Bending Stress (Mx)	-1078			
Bending Stress (My)	-4008			
Torsional Shear Stress (Mz)	10			
Sigma X	5295			
Sigma Y	209			
Txy	11			
	term 1	term 2	Sigma 1	Sigma 2
Principle Stress (2D)	2752	2543	5295	209
Equivalent Stress	5193			

Stress Calculator	Eric Haggard Ts/Eng 1-27-97			
Load Case 1: Main Beam Weld Stress				
Spread Sheet to calculate Stresses in Square Tube Beam (Stresses imposed on X-Z plane)				
X Force	-685			
Y Force	1240			
Z Force	-7580			
Moment @ X	-100640			
Moment @ Y	460590			
Moment @ Z	69545	Note: Ansys Result factored By L2/L1		
Area	18			
Ixx	271			
Izz	271			
Ij	542			
Mod. Of Elasticity	29000000			
Dist. Extreme Fiber	5			
Torsional Ext. Fiber	7			
RESULTS				
Normal Stress (Fy)	67			
Shear Stress (Fx, Fz)	414			
Bending Stress (Mx)	-1857			
Bending Stress (Mz)	1283			
Torsional Shear Stress (My)	6010			
Sigma X	3207			
Sigma Y	67			
Txy	6424			
	term 1	term 2	Sigma 1	Sigma 2
Principle Stress (2D)	1637	6613	8250	-4975
Equivalent Stress	11570			

Stress Calculator	Eric Haggard Ts/Eng 1-27-97			
Load Case 1: Main Beam Stress				
Spread Sheet to calculate Stresses in Square Tube Beam (Stresses imposed on X-Z plane)				
X Force	-1415			
Y Force	0			
Z Force	-14910			
Moment @ X	0			
Moment @ Y	-135000	Note: Ansys Result Factored by L2/L1		
Moment @ Z	0			
Area	18			
Ixx	271			
Izz	271			
Ij	542			
Mod. Of Elasticity	29000000			
Dist. Extreme Fiber	5			
Torsional Ext. Fiber	7			
RESULTS				
Normal Stress (Fy)	0			
Shear Stress (Fx, Fz)	814			
Bending Stress (Mx)	0			
Bending Stress (Mz)	0			
Torsional Shear Stress (My)	-1762			
Sigma X	0			
Sigma Y	0			
Txy	2575			
	term 1	term 2	Sigma 1	Sigma 2
Principle Stress (2D)	0	2575	2575	-2575
Equivalent Stress	4461			

MAIN BEAM & WELD STRESS ~CASE 1~

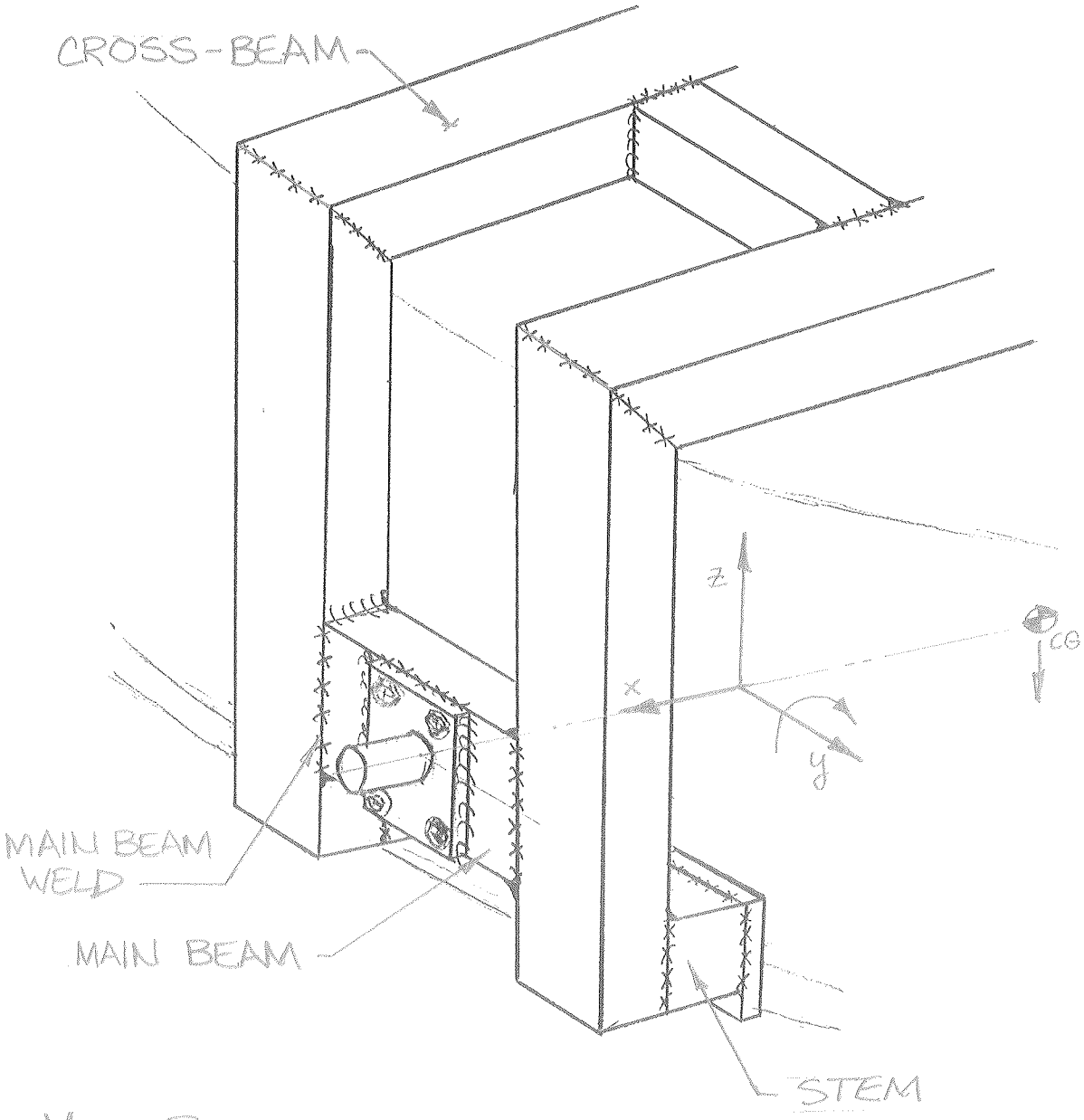

MAIN BEAM FORCES & MOMENTS

$F_x = -1415$ $\quad M_x = 0$

$F_y = 0$ $\quad M_y = -919820$ lb-in

$F_z = -14910^{\#}$ $\quad M_z = 0$

MAIN BEAM WELDS FORCES & MOMENTS

$F_x = 685^{\#}$ $\quad M_x = 100640$ lb-in

$F_y = -1240^{\#}$ $\quad M_y = -460590$ lb-in

$F_z = 7480^{\#}$ $\quad M_z = -69545$ lb-in

Stress Calculator	Eric Haggard Ts/Eng 1-27-97			
Load Case 1: Stem Connection				
Spread Sheet to calculate Stresses in Square Tube Beam (Stresses imposed on the Y-Z pla				
X Force	-10663			
Y Force	1934			
Z Force	-4317			
Moment @ X	-69969			
Moment @ Y	197969			
Moment @ Z	251070			
Area	18			
Iyy	271			
Izz	271			
Ij	542			
Mod. Of Elasticity	29000000			
Dist. Extreme Fiber	5			
Torsional Ext. Fiber	7			
RESULTS				
Normal Stress (Fx)	-580			
Shear Stress (Fy, Fz)	257			
Bending Stress (My)	3653			
Bending Stress (Mz)	4632			
Torsional Shear Stress (Mx)	-913			
Bolt Torsion Shear Stress	151			
Sigma X	8864			
Sigma Y	-235			
Txy	1321			
	term 1	term 2	Sigma 1	Sigma 2
Principle Stress (2D)	4315	4738	9052	-423
Equivalent Stress	9271			

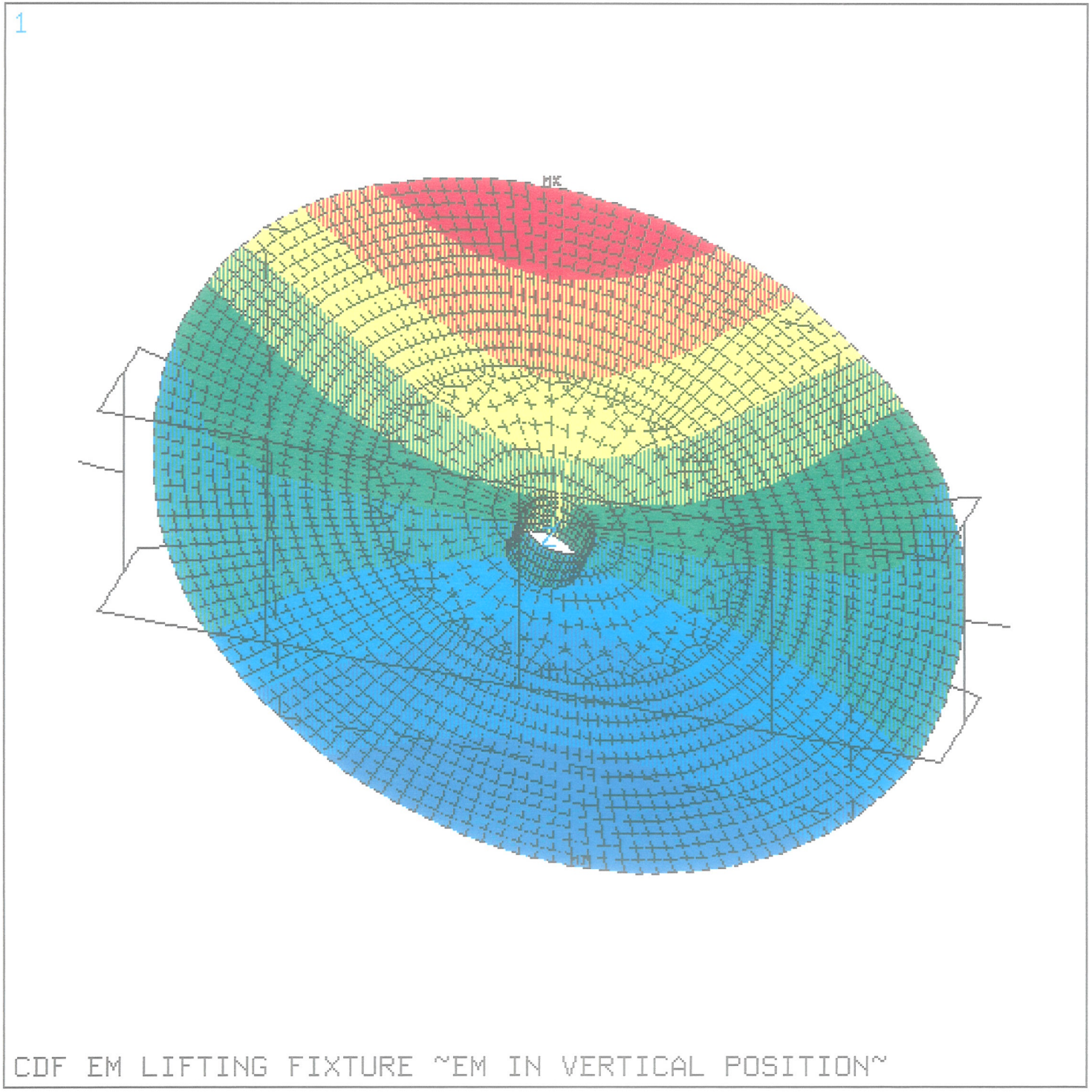
1
MX
MN
ANSYS 5.1
FEB 1 1997
21:20:13
NODAL SOLUTION
STEP=1
SUB =1
TIME=1
UZ
TOP
RSYS=0
DMX =0.046793
SEPC=35.972
SMN =-0.036331
SMX =0.046734
-0.036331
-0.027102
-0.017872
-0.008643
0.587E-03
0.009816
0.019046
0.028275
0.037505
0.046734
CDF EM LIFTING FIXTURE ~EM IN VERTICAL POSITION~

1

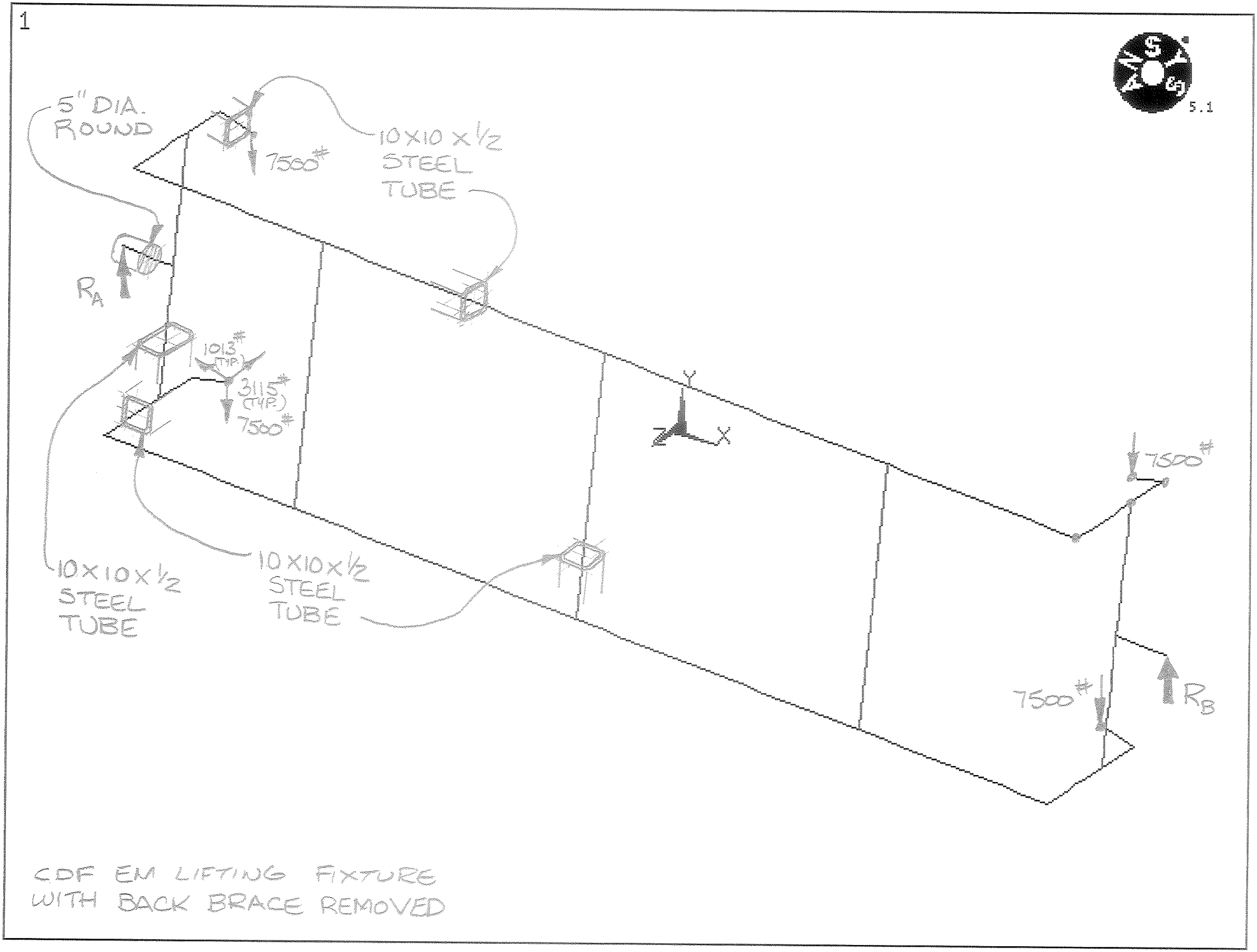

CDF EM LIFTING FIXTURE
WITH BACK BRACE REMOVED

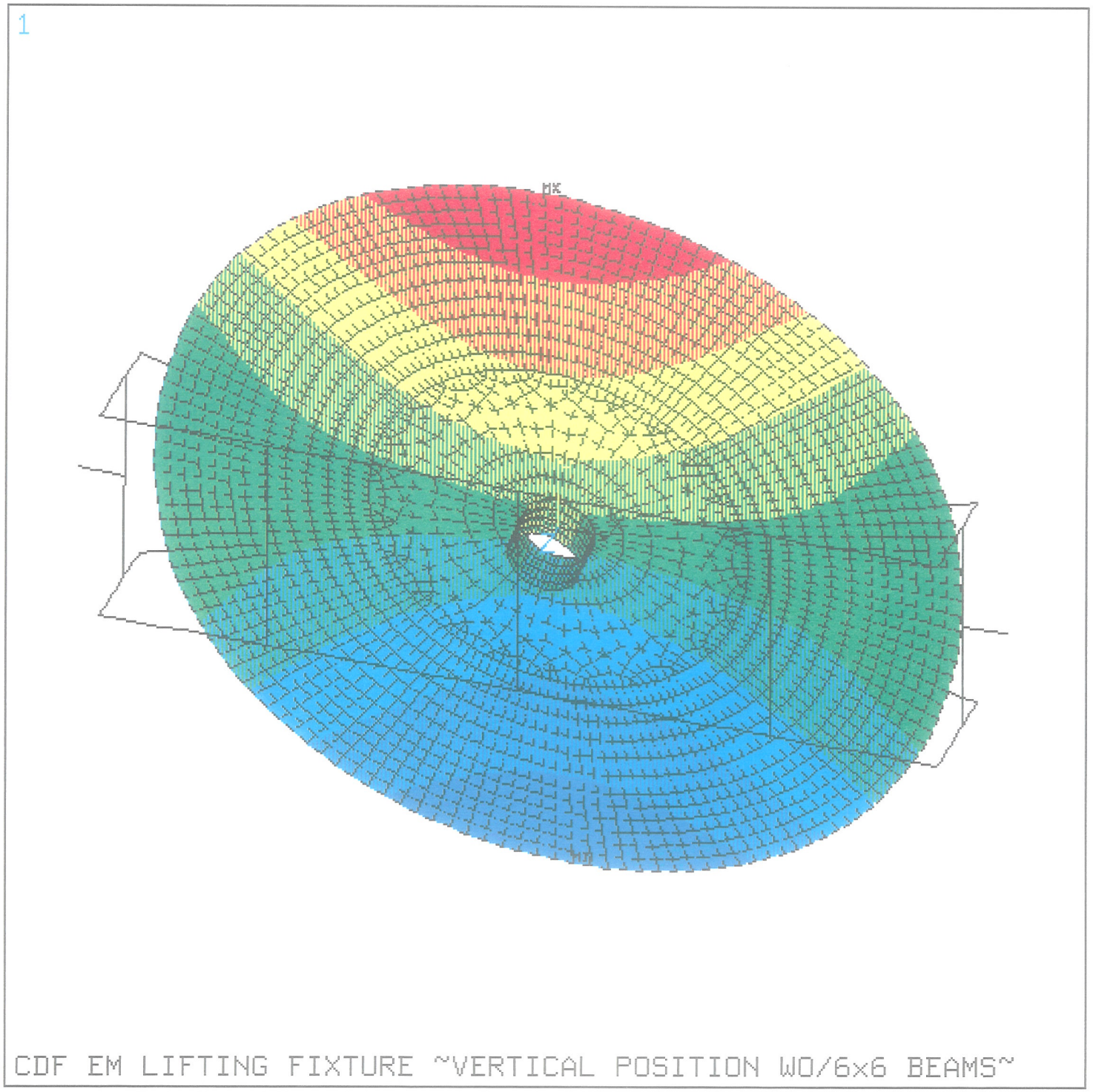
1
MX
MN
ANSYS 5.1
FEB 1 1997
21:22:24
NODAL SOLUTION
STEP=1
SUB =1
TIME=1
UZ
TOP
RSYS=0
DMX =0.062528
SEPC=31.17
SMN =-0.062487
SMX =0.062487
-0.062487
-0.048601
-0.034715
-0.020829
-0.006943
0.006943
0.020829
0.034715
0.048601
0.062487
CDF EM LIFTING FIXTURE ~VERTICAL POSITION WO/6x6 BEAMS~

JLH 1-24-91

LIFTING FIXTURE STEM CONNECTION
LOAD CASE 2 & 3

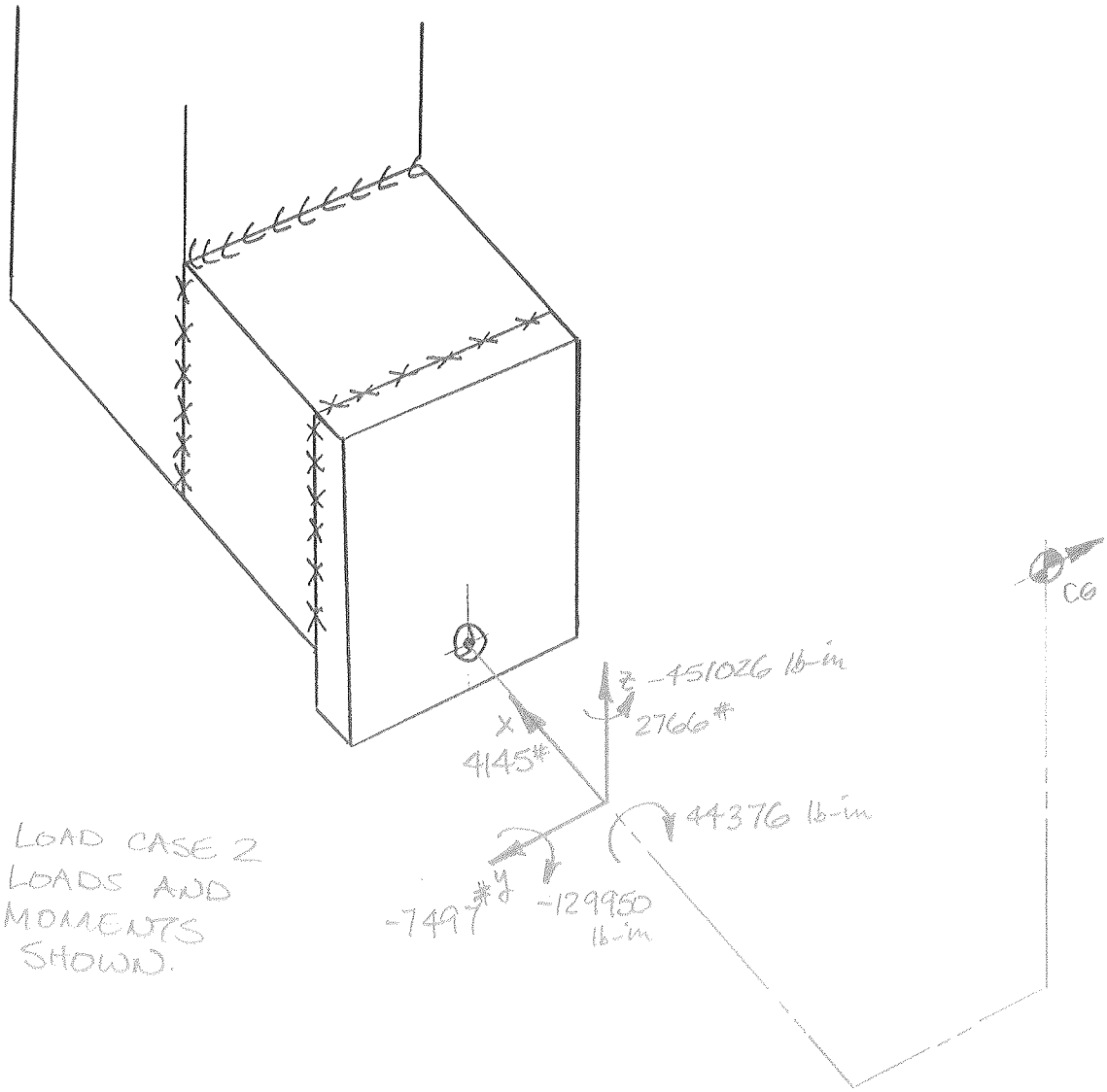

LOAD CASE 2 LOADS AND MOMENTS SHOWN.

NORMAL & SHEAR COMPONENT DIRECTIONS TAKEN AS IN CASE 1.

LOAD CASE 2

$F_x = 4145$ $\quad M_x = 44376$

$F_y = -7497$ $\quad M_y = 129950$

$F_z = 2766$ $\quad M_z = 451025$

LOAD CASE 3

$F_x = 4174$ $\quad M_x = 45000$

$F_y = -7500$ $\quad M_y = 132089$

$F_z = 2827$ $\quad M_z = 451624$

RAW ANSYS RESULTS FROM LOAD CASE 2

Case 2: Main Beam Loads and Moments

```
***** SUMMATION OF TOTAL FORCES AND MOMENTS IN GLOBAL COORDINATES *****
 FX  =   35.44011
 FY  =  -15000.00
 FZ  = -0.8118650E-02
 MX  =   88938.19
 MY  =   213.1462
 MZ  =  -933977.7
 SUMMATION POINT=      0.          0.          0.
```

Case 2: Main Beam Weld Loads and Moments

```
***** SUMMATION OF TOTAL FORCES AND MOMENTS IN GLOBAL COORDINATES *****
 FX  =   5055.680
 FY  =  -7498.423
 FZ  =   2597.937
 MX  =   44411.26
 MY  =  -110245.1
 MZ  =  -467078.0
 SUMMATION POINT=      0.          0.          0.
```

Case 2: Cantilever Elbow Loads and Moments

```
***** SUMMATION OF TOTAL FORCES AND MOMENTS IN GLOBAL COORDINATES *****
 FX  =  -3466.848
 FY  =   7496.712
 FZ  =  -2762.884
 MX  =  -44373.64
 MY  =   129863.3
 MZ  =   441516.6
 SUMMATION POINT=      0.          0.          0.
```

Case 2: Cross Beam Elbow Forces and Moments

```
***** SUMMATION OF TOTAL FORCES AND MOMENTS IN GLOBAL COORDINATES *****
 FX  =  -525.7278
 FY  =   2.051446
 FZ  =   156.8464
 MX  =  -36.14104
 MY  =  -13361.65
 MZ  =   10591.49
SUMMATION POINT=      0.          0.          0.
```

Case 2: Stem Connection Bolt Loads

```
***** SUMMATION OF TOTAL FORCES AND MOMENTS IN GLOBAL COORDINATES *****
 FX  =  -3258.112
 FY  =   7495.652
 FZ  =  -2789.480
 MX  =  -44374.08
 MY  =   130788.1
 MZ  =   438530.1
SUMMATION POINT=      0.          0.          0.
```


RAW ANSYS RESULTS FROM LOAD CASE 3

Case 3: Main Beam Loads and Moments

```
***** SUMMATION OF TOTAL FORCES AND MOMENTS IN GLOBAL COORDINATES *****
 FX  =  0.1261476E-05
 FY  =  -15000.00
 FZ  = -0.6086975E-07
 MX  =   89999.95
 MY  =  0.1135890E-04
 MZ  =  -933977.7
 SUMMATION POINT=      0.          0.          0.
```

Case 3: Main Beam Weld Loads and Moments

```
***** SUMMATION OF TOTAL FORCES AND MOMENTS IN GLOBAL COORDINATES *****
 FX  =   5043.844
 FY  =  -7500.002
 FZ  =   2657.121
 MX  =   45000.13
 MY  =  -112998.4
 MZ  =  -466989.0
 SUMMATION POINT=      0.          0.          0.
```

Case 3: Cantilever Elbow Loads and Moments

```
***** SUMMATION OF TOTAL FORCES AND MOMENTS IN GLOBAL COORDINATES *****
 FX  =  -4174.392
 FY  =   7500.004
 FZ  =  -2826.748
 MX  =  -45000.27
 MY  =   132088.9
 MZ  =   451623.6
 SUMMATION POINT=      0.          0.          0.
```

Case 3: Cross Beam Elbow Forces and Moments

```
***** SUMMATION OF TOTAL FORCES AND MOMENTS IN GLOBAL COORDINATES *****
 FX  =  -869.4524
 FY  = -0.1898908E-02
 FZ  =   169.6268
 MX  =  0.1392116
 MY  =  -19090.56
 MZ  =   15365.34
SUMMATION POINT=      0.          0.          0.
```

Case 3: Stem Connection Bolt Loads

```
***** SUMMATION OF TOTAL FORCES AND MOMENTS IN GLOBAL COORDINATES *****
 FX  =   1013.331
 FY  =   7499.969
 FZ  =  -3114.906
 MX  =  -47700.30
 MY  =   144983.2
 MZ  =   378781.3
SUMMATION POINT=      0.          0.          0.
```

Stress Calculator	Eric Haggard Ts/Eng 1-27-97			
Load Case 2 & 3: Stem Connection				
Spread Sheet to calculate Stresses in Square Tube Beam (Stresses imposed on the Y-Z pla				
X Force	4145			
Y Force	-7497			
Z Force	2766			
Moment @ X	44376			
Moment @ Y	129950			
Moment @ Z	451025			
Area	18.40			
Iyy	271.00			
Izz	271.00			
Ij	542.00			
Mod. Of Elasticity	29000000			
Dist. Extreme Fiber	5.00			
Torsional Ext. Fiber	7.07			
RESULTS				
Normal Stress (Fx)	225			
Shear Stress (Fy, Fz)	434			
Bending Stress (My)	2398			
Bending Stress (Mz)	8321			
Torsional Shear Stress (Mx)	579			
Bolt Torsion Shear Stress	-587			
Sigma X	10944			
Sigma Y	150			
Txy	1600			
	term 1	term 2	Sigma 1	Sigma 2
Principle Stress (2D)	5547	5629	11177	-82
Equivalent Stress	11218			

JEH 1-28-97

MAIN BEAM & WELD STRESS FOR CASES 2 & 3

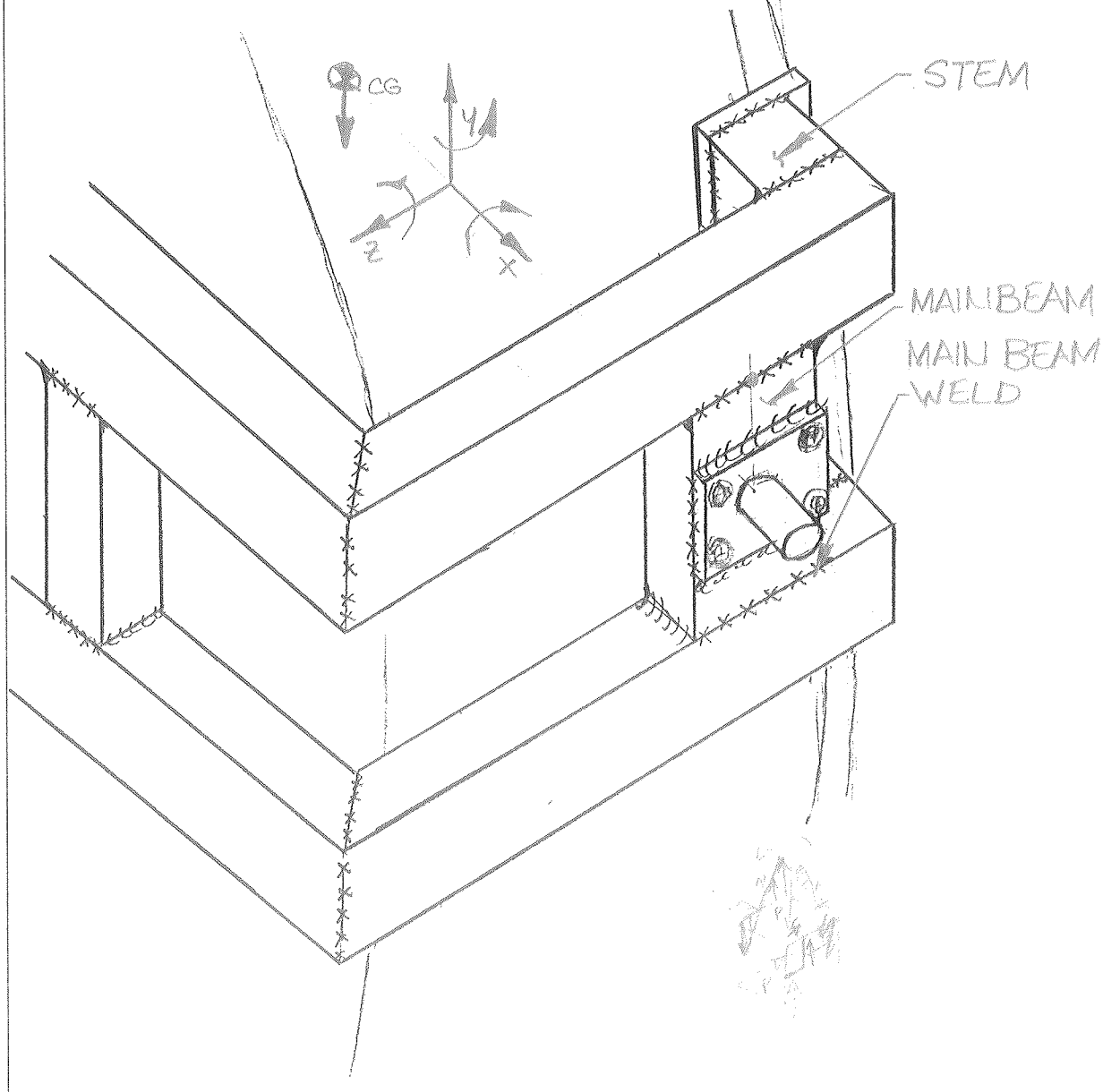

CASE 2

MAIN BEAM FORCES & MOMENTS

$F_x = -35^{\#}$ $M_x = 88940$ lb-in
$F_y = -15000^{\#}$ $M_y = 213$ lb-in
$F_z = 0$ $M_z = 933980$ lb-in

MAIN BEAM WELD FORCES & MOMENTS

$F_x = -5060^{\#}$ $M_x = -44500$ lb-in
$F_y = -7500^{\#}$ $M_y = 110245$ lb-in
$F_z = -2600^{\#}$ $M_z = 467,100$ lb-in

CASE 3

MAIN BEAM FORCES & MOMENTS

$F_x = 0$ $M_x = 90,000$ lb-in
$F_y = -15000^{\#}$ $M_y = 0$
$F_z = 0$ $M_z = 933980$

MAIN BEAM WELDS FORCES & MOMENTS

$F_x = -5045^{\#}$ $M_x = 45,000$ lb-in
$F_y = -7500^{\#}$ $M_y = 113000$ lb-in
$F_z = -2660^{\#}$ $M_z = 467000$ lb-in

Stress Calculator	Eric Haggard Ts/Eng 1-27-97			
Load Case 2 and 3: Main Beam Stress				
Spread Sheet to calculate Stresses in Square Tube Beam (Stresses imposed on X-Z plane)				
X Force	35			
Y Force	-15000			
Z Force	0			
Moment @ X	88940			
Moment @ Y	213			
Moment @ Z	-135000	Note: Ansys Result Factored By L2/L1		
Area	18			
Ixx	271			
Izz	271			
Ij	542			
Mod. Of Elasticity	29000000			
Dist. Extreme Fiber	5			
Torsional Ext. Fiber	7			
RESULTS				
Normal Stress (Fy)	-815			
Shear Stress (Fx, Fz)	2			
Bending Stress (Mx)	1641			
Bending Stress (Mz)	-2491			
Torsional Shear Stress (My)	3			
Sigma X	4947			
Sigma Y	-815			
Txy	5			
	term 1	term 2	Sigma 1	Sigma 2
Principle Stress (2D)	2066	2881	4947	-815
Equivalent Stress	5401			

Stress Calculator	Eric Haggard Ts/Eng 1-27-97			
Load Case 2 and 3: Main Beam Weld Stress				
Spread Sheet to calculate Stresses in Square Tube Beam (Stresses imposed on X-Z plane)				
X Force	5060			
Y Force	-7500			
Z Force	2600			
Moment @ X	45000			
Moment @ Y	-110245			
Moment @ Z	-67500	Note: Ansys Result Factored By L2/L1		
Area	18			
Ixx	271			
Izz	271			
Ij	542			
Mod. Of Elasticity	29000000			
Dist. Extreme Fiber	5			
Torsional Ext. Fiber	7			
RESULTS				
Normal Stress (Fy)	-408			
Shear Stress (Fx, Fz)	309			
Bending Stress (Mx)	830			
Bending Stress (Mz)	-1245			
Torsional Shear Stress (My)	-1439			
Sigma X	2483			
Sigma Y	-408			
Txy	1748			
	term 1	term 2	Sigma 1	Sigma 2
Principle Stress (2D)	1038	2268	3306	-1230
Equivalent Stress	4063			

Stress Calculator	Eric Haggard Ts/Eng 1-27-97			
Load Case 2 & 3: X-Beam Upright Connection				
Spread Sheet to calculate Stresses in Square Tube Beam (Stress imposed on the X-Y plane				
X Force	-525			
Y Force	0			
Z Force	157			
Moment @ X	0			
Moment @ Y	-13362			
Moment @ Z	10592			
Area	18			
Iyy	271			
Izz	271			
Ij	542			
Mod. Of Elasticity	29000000			
Dist. Extreme Fiber	5			
Torsional Ext. Fiber	7			
RESULTS				
Normal Stress (Fz)	9			
Shear Stress (Fx, Fy)	29			
Bending Stress (Mx)	0			
Bending Stress (My)	-247			
Torsional Shear Stress (Mz)	138			
Sigma X	255			
Sigma Y	9			
Txy	167			
	term 1	term 2	Sigma 1	Sigma 2
Principle Stress (2D)	132	207	339	-76
Equivalent Stress	383			

Stress Calculator	Eric Haggard Ts/Eng 1-27-97			
Load Case 2 & 3: Elbow Connection				
Spread Sheet to calculate Stresses in Square Tube Beam (Stress imposed on the X-Y plane				
X Force	-3466			
Y Force	7500			
Z Force	-2762			
Moment @ X	-44373			
Moment @ Y	129863			
Moment @ Z	441516			
Area	18			
Iyy	271			
Izz	271			
Ij	542			
Mod. Of Elasticity	29000000			
Dist. Extreme Fiber	5			
Torsional Ext. Fiber	7			
RESULTS				
Normal Stress (Fz)	-150			
Shear Stress (Fx, Fy)	449			
Bending Stress (Mx)	-819			
Bending Stress (My)	2396			
Torsional Shear Stress (Mz)	5761			
Sigma X	3365			
Sigma Y	-150			
Txy	6210			
	term 1	term 2	Sigma 1	Sigma 2
Principle Stress (2D)	1607	6454	8061	-4847
Equivalent Stress	11293			